ETSI TR 137 941 V16.5.0 (2023-07)

Universal Mobile Telecommunications System (UMTS);
LTE;
5G;
Radio Frequency (RF) conformance testing background for radiated Base Station (BS) requirements
(3GPP TR 37.941 version 16.5.0 Release 16)

Reference
RTR/TSGR-0437941vg50

Keywords
5G,LTE,UMTS

ETSI

650 Route des Lucioles
F-06921 Sophia Antipolis Cedex - FRANCE

Tel.: +33 4 92 94 42 00 Fax: +33 4 93 65 47 16

Siret N° 348 623 562 00017 - APE 7112B
Association à but non lucratif enregistrée à la
Sous-Préfecture de Grasse (06) N° w061004871

Intellectual Property Rights

Essential patents

IPRs essential or potentially essential to normative deliverables may have been declared to ETSI. The declarations pertaining to these essential IPRs, if any, are publicly available for **ETSI members and non-members**, and can be found in ETSI SR 000 314: *"Intellectual Property Rights (IPRs); Essential, or potentially Essential, IPRs notified to ETSI in respect of ETSI standards"*, which is available from the ETSI Secretariat. Latest updates are available on the ETSI Web server (https://ipr.etsi.org/).

Pursuant to the ETSI Directives including the ETSI IPR Policy, no investigation regarding the essentiality of IPRs, including IPR searches, has been carried out by ETSI. No guarantee can be given as to the existence of other IPRs not referenced in ETSI SR 000 314 (or the updates on the ETSI Web server) which are, or may be, or may become, essential to the present document.

Trademarks

The present document may include trademarks and/or tradenames which are asserted and/or registered by their owners. ETSI claims no ownership of these except for any which are indicated as being the property of ETSI, and conveys no right to use or reproduce any trademark and/or tradename. Mention of those trademarks in the present document does not constitute an endorsement by ETSI of products, services or organizations associated with those trademarks.

DECT™, **PLUGTESTS™**, **UMTS™** and the ETSI logo are trademarks of ETSI registered for the benefit of its Members. **3GPP™** and **LTE™** are trademarks of ETSI registered for the benefit of its Members and of the 3GPP Organizational Partners. **oneM2M™** logo is a trademark of ETSI registered for the benefit of its Members and of the oneM2M Partners. **GSM®** and the GSM logo are trademarks registered and owned by the GSM Association.

Legal Notice

This Technical Report (TR) has been produced by ETSI 3rd Generation Partnership Project (3GPP).

The present document may refer to technical specifications or reports using their 3GPP identities. These shall be interpreted as being references to the corresponding ETSI deliverables.

The cross reference between 3GPP and ETSI identities can be found under https://webapp.etsi.org/key/queryform.asp.

Modal verbs terminology

In the present document "**should**", "**should not**", "**may**", "**need not**", "**will**", "**will not**", "**can**" and "**cannot**" are to be interpreted as described in clause 3.2 of the ETSI Drafting Rules (Verbal forms for the expression of provisions).

"**must**" and "**must not**" are **NOT** allowed in ETSI deliverables except when used in direct citation.

Contents

Foreword

This Technical Report has been produced by the 3rd Generation Partnership Project (3GPP).

The contents of the present document are subject to continuing work within the TSG and may change following formal TSG approval. Should the TSG modify the contents of the present document, it will be re-released by the TSG with an identifying change of release date and an increase in version number as follows:

Version x.y.z

where:

x the first digit:

1 presented to TSG for information;

2 presented to TSG for approval;

3 or greater indicates TSG approved document under change control.

y the second digit is incremented for all changes of substance, i.e. technical enhancements, corrections, updates, etc.

z the third digit is incremented when editorial only changes have been incorporated in the document.

In the present document, modal verbs have the following meanings:

shall indicates a mandatory requirement to do something

shall not indicates an interdiction (prohibition) to do something

The constructions "shall" and "shall not" are confined to the context of normative provisions, and do not appear in Technical Reports.

The constructions "must" and "must not" are not used as substitutes for "shall" and "shall not". Their use is avoided insofar as possible, and they are not used in a normative context except in a direct citation from an external, referenced, non-3GPP document, or so as to maintain continuity of style when extending or modifying the provisions of such a referenced document.

should indicates a recommendation to do something

should not indicates a recommendation not to do something

may indicates permission to do something

need not indicates permission not to do something

The construction "may not" is ambiguous and is not used in normative elements. The unambiguous constructions "might not" or "shall not" are used instead, depending upon the meaning intended.

can indicates that something is possible

cannot indicates that something is impossible

The constructions "can" and "cannot" are not substitutes for "may" and "need not".

will indicates that something is certain or expected to happen as a result of action taken by an agency the behaviour of which is outside the scope of the present document

will not indicates that something is certain or expected not to happen as a result of action taken by an agency the behaviour of which is outside the scope of the present document

might indicates a likelihood that something will happen as a result of action taken by some agency the behaviour of which is outside the scope of the present document

might not indicates a likelihood that something will not happen as a result of action taken by some agency the behaviour of which is outside the scope of the present document

In addition:

is (or any other verb in the indicative mood) indicates a statement of fact

is not (or any other negative verb in the indicative mood) indicates a statement of fact

The constructions "is" and "is not" do not indicate requirements.

1 Scope

The present document is the Technical Report for the Work Item on Over The Air (OTA) Base Station (BS) testing.

This Technical Report covers background information of OTA testing methods, measurement uncertainty and test tolerance values derivation for the radiated conformance testing requirements. This Technical Report covers radiated conformance testing requirements for the following BS types:

- *Hybrid AAS BS* as specified in AAS BS radiated testing specification TS 37.145-2 [4] for the following radio technologies:
  - *Hybrid AAS BS* in *single RAT UTRA operation*, TDD
  - *Hybrid AAS BS* in *single RAT UTRA operation*, FDD
  - *Hybrid AAS BS* in *single RAT E-UTRA operation*
  - *Hybrid AAS BS* in *MSR operation* implementing any of the above RATs, including NR operation.
- OTA AAS BS as specified in AAS BS radiated testing specification TS 37.145-2 [4] for the following radio technologies:
  - OTA AAS BS in *single RAT UTRA operation*, FDD
  - OTA AAS BS in *single RAT E-UTRA operation*
  - OTA AAS BS in *MSR operation* implementing any of the above RATs, and/or NR.
- *BS type 1-H* in *single RAT NR operation* in FR1, as specified in NR BS radiated testing specification TS 38.141-2 [6],
- *BS type 1-O* in *single RAT NR operation* in FR1, as specified in NR BS radiated testing specification TS 38.141-2 [6],
- *BS type 2-O* in *single RAT NR operation* in FR2, as specified in NR BS radiated testing specification TS 38.141-2 [6].

Generic term "BS" is used to refer to any of these BS types, unless otherwise stated.

This 3GPP external Technical Report consolidates the OTA measurement related information originating from multiple AAS BS and NR BS internal technical reports. This information is needed to supplement the BS radiated testing specifications as a single, 3GPP external technical report, such that the information can be referred to from external specifications and bodies.

The NR BS specification refers to two frequency ranges, FR1 and FR2. The AAS BS specification is only applicable for operating bands within FR1. Thus, sections in this report referring to FR2 should be considered as applicable to NR only.

2 References

The following documents contain provisions which, through reference in this text, constitute provisions of the present document.

- References are either specific (identified by date of publication, edition number, version number, etc.) or non-specific.
- For a specific reference, subsequent revisions do not apply.
- For a non-specific reference, the latest version applies. In the case of a reference to a 3GPP document (including a GSM document), a non-specific reference implicitly refers to the latest version of that document *in the same Release as the present document*.

[1] 3GPP TR 21.905: "Vocabulary for 3GPP Specifications".

[2] 3GPP TS 25.141: "Base Station (BS) conformance testing (FDD)".

[3] 3GPP TS 36.141: "Evolved Universal Terrestrial Radio Access (E-UTRA); Base Station (BS) conformance testing".

[4] 3GPP TS 37.145-2: "Active Antenna System (AAS) Base Station (BS) conformance testing; Part 2: Radiated conformance testing".

[5] 3GPP TS 38.141-1: "NR; Base Station (BS) conformance testing; Part 1: Conducted conformance testing".

[6] 3GPP TS 38.141-2: "NR; Base Station (BS) conformance testing; Part 2: Radiated conformance testing".

[7] IEEE Std 149: "IEEE Standard Test Procedures for Antennas", IEEE.

[8] JCGM 100:2008: "Evaluation of measurement data — Guide to the expression of uncertainty in measurement".

[9] Hald, J.; Hansen, J. E.; Jensen, F. & Holm Larsen, F. Hansen, J. (Ed): "Spherical Near-Field Antenna Measurements", Peter Peregrinus Ltd., 1998, vol 26.

[10] J. Fridén, A. Razavi, and A. Stjernman: "Angular sampling, Test Signal, and Near-Field Aspects for Over-the-Air Total Radiated Power Assessment in Anechoic Chambers", IEEE Access, 2018, https://ieeexplore.ieee.org/stamp/stamp.jsp?arnumber=8470084.

[11] IEC 61000-4-21: "Electromagnetic compatibility (EMC) - Part 4-21: Testing and measurement techniques - Reverberation chamber test methods", Edition 2.0 2011-01, The International Electrotechnical Commision (IEC), 2011.

[12] Hill, D.A.: "Boundary fields in reverberation chambers", IEEE Transactions on Electromagnetic Compatibility, vol. 47, no. 2, pp. 281-290, May 2005.

[13] Krauthäuser, H. G.; Winzerling, T.; J., N.; Eulig, N. & Enders, A: "Statistical interpretation of autocorrelation coefficients for fields in mode-stirred chambers", 2005 International Symposium on Electromagnetic Compatibility, 2005. EMC 2005, 2005, 2, 550-555.

[14] 3GPP TS 37.105: "Active Antenna System (AAS) Base Station (BS) transmission and reception".

[15] ITU-R Recommendation SM.329: "Unwanted emissions in the spurious domain".

[16] 3GPP TS 37.113: "E-UTRA, UTRA and GSM/EDGE; Multi-Standard Radio (MSR) Base Station (BS) Electromagnetic Compatibility (EMC)".

[17] 3GPP TS 37.114: "Active Antenna System (AAS) Base Station (BS) Electromagnetic Compatibility (EMC)".

[18] 3GPP TS 38.113: "Base Station (BS) Electromagnetic Compatibility (EMC)".

[19] IEC 61000-4-3: "Electromagnetic compatibility (EMC) - Part 4-3: Testing and measurement techniques - Radiated, radio-frequency, electromagnetic field immunity test".

[20] Victor Rabinovich, Nikolai Alexandrov, Basim Alkhateeb: "Automotive Antenna Design and Applications"; 2010.

[21] 3GPP TS 37.145-1: "Base Station (BS) conformance testing Part 1: Conducted conformance testing".

[22] Jonas Fridén: "Sparse sampling analysis", Matlab code, 2020, https://se.mathworks.com/matlabcentral/fileexchange/67143-sparse-sampling-analysis-tool?s_tid=srchtitle.

[23] Void.

[24] 3GPP TR 25.914: "Measurements of radio performances for UMTS terminals in speech mode".

[25] ERC Recommendation 74-01: "Unwanted emissions in the spurious domain".

3 Definitions of terms, symbols and abbreviations

3.1 Terms

For the purposes of the present document, the terms given in TR 21.905 [1] and the following apply. A term defined in the present document takes precedence over the definition of the same term, if any, in TR 21.905 [1].

NOTE 1: Multi-word definitions are treated as linguistic expressions and printed in italic font throughout this requirement specification. Linguistic expressions may not be split and are printed in their entirety.

active antenna system base station: base station system which combines an *antenna array* with a *transceiver unit* array and a *radio distribution network*

array element: subdivision of a passive *antenna array*, consisting of a single *radiating element* or a group of *radiating element*s, with a fixed *radiation pattern*

antenna array: group of *radiating element*s characterized by the geometry and the properties of the *array elements*

antenna gain: ratio of the radiation intensity, in a given direction, to the radiation intensity that would be obtained if the power accepted by the antenna were radiated isotropically

NOTE 2: If the direction is not specified, the direction of maximum radiation intensity is implied.

array factor: *radiation pattern* of an array antenna when each *array element* is considered to radiate isotropically

NOTE 3: When the *radiation pattern* of individual *array elements* are identical, and the *array elements* are congruent under translation, then the product of the *array factor* and the *array element radiation pattern* gives the *radiation pattern* of the entire array.

angle of arrival: is the direction of propagation of electromagnetic wave incident on an BS *antenna array*

beam: main lobe of a *radiation pattern* from a BS

NOTE 4: For certain BS *antenna array*, there may be more than one beam.

beam centre direction: direction equal to the geometric centre of the half-power contour of the beam

beam direction pair: data set consisting of the *beam centre direction* and the related *beam peak direction*

beam peak direction: direction where the maximum EIRP is supposed to be found

beamwidth: beam which has a half-power contour that is essentially elliptical, the half-power beamwidths in the two pattern cuts that respectively contain the major and minor axis of the ellipse

BS type 1-O: NR base station operating at FR1 with a requirement set consisting only of OTA requirements defined at the RIB

BS type 2-O: NR base station operating at FR2 with a requirement set consisting only of OTA requirements defined at the RIB

co-location reference antenna: reference antenna used for co-location requirements

co-location test antenna: practical passive antenna that is used for conformance testing of the co-location requirements and is based on the definition of the *co-location reference antenna*

cylindrical diameter: diameter of the smallest cylinder that encloses the radiation source along z-axis (in reference angular step criteria)

directivity: ratio of the radiation intensity in a given direction from the antenna to the radiation intensity averaged over all directions

NOTE 5: If the direction is not specified, the direction of maximum radiation intensity is implied.

equivalent isotropic radiated power: equivalent power radiated from an isotropic directivity device producing the same field intensity at a point of observation as the field intensity radiated in the direction of the same point of observation by the discussed device

NOTE 6: Isotropic directivity is equal in all directions (i.e. 0 dBi).

equivalent isotropic sensitivity: sensitivity for an isotropic directivity device equivalent to the sensitivity of the discussed device exposed to an incoming wave from a defined AoA

NOTE 7: The sensitivity is the minimum received power level at which a RAT specific requirement is met.

NOTE 8: Isotropic directivity is equal in all directions (i.e. 0 dBi).

frequency range 1: frequency range capturing AAS BS or NR BS operation in range from 410 MHz up to 7125 MHz

frequency range 2: frequency range capturing NR BS operation in range from 24250 MHz up to 52600 MHz

hybrid AAS BS: AAS BS which has both a conducted RF interface and a radiated RF interface in the far field and conforms to a *hybrid requirements set*

hybrid requirements set: Complete set of requirements applied to a *hybrid AAS BS* with both conducted and radiated requirements

MSR operation: operation of AAS BS declared to be MSR in particular *operating band(s)*

OTA coverage range: a common range of directions within which TX OTA requirements that are neither specified in the *OTA peak directions sets* nor as *TRP requirement* are intended to be met

OTA peak directions set: set(s) of *beam peak directions* within which certain TX OTA requirements are intended to be met, where all *OTA peak directions set(s)* are subsets of the *OTA coverage range*

NOTE 9: The *beam peak directions* are related to a corresponding contiguous range or discrete list of *beam centre directions* by the *beam direction pairs* included in the set.

OTA REFSENS RoAoA: is the RoAoA determined by the contour defined by the points at which the achieved EIS is 3dB higher than the achieved EIS in the reference direction.

NOTE 10: This contour will be related to the average element/sub-array *radiation pattern* 3dB beam width

OTA requirements set: complete set of OTA requirements applied to an OTA BS

OTA sensitivity directions declaration: set of manufacturer declarations comprising at least one set of declared minimum EIS values (with related RAT and *channel bandwidth*), and related directions over which the EIS applies

NOTE 11: All the directions apply to all the EIS values in an OSDD.

polarization match: condition that exists when a plane wave, incident upon an antenna from a given direction, has a polarization that is the same as the receiving polarization of the antenna in that direction

radiated interface boundary: operating band specific radiated requirements reference where the radiated requirements apply

NOTE 12: For requirements based on EIRP/EIS, the *radiated interface boundary* is associated to the far-field region

radiating element: basic building block of an *array element* characterized by its radiation properties

radiation pattern: angular distribution of the radiated electromagnetic field or power level in the far field region

radio distribution network: linear passive network which distributes the RF power generated by the *transceiver unit* array to the *antenna array*, and/or distributes the radio signals collected by the *antenna array* to the *transceiver unit* array

NOTE 13: In the case when the active *transceiver units* are physically integrated with the *array elements* of the *antenna array*, the *radio distribution network* is a one-to-one mapping.

receiver target: AoA in which reception is performed by OTA BS.

NOTE 14: In this TR, OTA BS is considered to be either OTA AAS BS, or NR BS (*BS type 1-O*, or *BS type 2-O*).

receiver target redirection range: union of all the *sensitivity RoAoA* achievable through redirecting the *receiver target* related to particular OSDD

receiver target reference direction: direction inside the *OTA sensitivity directions declaration* declared by the manufacturer for conformance testing. For an OSDD without *receiver target redirection range*, this is a direction inside the *sensitivity RoAoA*

sensitivity RoAoA: RoAoA within the *OTA sensitivity directions declaration*, within which the declared EIS(s) of an OSDD is intended to be achieved at any instance of time for a specific AAS BS direction setting

single RAT E-UTRA operation: operation of AAS BS declared to be single RAT E-UTRA in the *operating band*

NOTE 15: *Single RAT E-UTRA operation* does not cover in-band NB-IoT, nor guardband NB-IoT operation.

single RAT UTRA operation: operation of AAS BS declared to be single RAT UTRA in the *operating band*

spherical diameter: diameter of the smallest sphere enclosing the radiation source (in reference angular step criteria)

total radiated power: is the total power radiated by the antenna.

NOTE 16: The *total radiated power* is the power radiating in all direction for two orthogonal polarizations.

NOTE 17: *Total radiated power* is defined in both the near-field region and the far-field region.

transceiver array boundary: conducted interface between the *transceiver unit array* and the composite antenna

transceiver unit: active unit consisting of transmitter and/or receiver which transmits and/or receives radio signals, and which may include passive RF filters

transceiver unit array: array of *transceiver units* which generate radio signals in the transmit direction and accept radio signals in the receive direction

transmitter ON period: time period during which the transmitter is transmitting data and/or reference symbols

TRP requirement: OTA BS requirements, which requires dual-polarized measurements of the figure of merit over the whole sphere around the BS

TRP summation error: the relative difference between theoretical TRP and numerically estimated TRP

3.2 Symbols

For the purposes of the present document, the following symbols apply:

φ Azimuth angle (defined between -180° and 180°)

θ	Elevation angle of the signal direction (defined between -90° and 90°, 0° represents the direction perpendicular to the *antenna array*)
BeW_θ	Beamwidth in the θ-axis in degrees
BeW_ϕ	Beamwidth in the ϕ-axis in degrees
c_i	Sensitivity coefficient
D	Diameter of the source enclosure, i.e., the diameter of the smallest sphere enclosing all sources
D	Largest dimension of the antenna of BS (measurement system description)
$D_{BSoutputpower}$	Directivity of BS for the OTA BS output power requirement
D_{cyl}	Diameter of the smallest *z*-directed circular cylinder that encloses all sources.
D_{BS}	Directivity of BS
D_y	Length of radiating part of the BS along y-axis,
D_z	Length of radiated part of the BS along the z-axis
$EIRP_d$	EIRP value for the desired signal (unwanted emissions requirement)
$EIRP_e$	EIRP value for the emissions (unwanted emissions requirement)
$EIS_{REFSENS}$	OTA reference sensitivity
Γ_{SGH}	Reflection coefficient (or mismatch) seen at the SGH connector (S_{11} with a network analyzer)
G_{REF_ANT}	Gain of the reference antenna
η	Radiation efficiency
L	distance along the *z*-axis (reference angular step criteria)
$L_{cal,\ A\rightarrow B}$	Calibration value between point A and B (measurement system setup)
$LF_{A\rightarrow B}$	Pathloss between point A and B, or cable loss between point A and B (measurement system setup)
$L_{TX\_cal,\ A\rightarrow D}$	EIRP value for the E-UTRA DL RS requirement
$M_1^{(r)}$	Mis-match efficiency (reverberation chamber calibration)
$MU_{perpoint}$	MU value for the per-point measurement for the *TRP requirements*
$P^{(r)}$	Reference transfer function (reverberation chamber calibration)
P_{DL_RS}	Measured signal power of DL RS EIRP (E-UTRA DL RS requirement)
P_{meas}	Measured mean power
$P_{R\_EIRP,\ D}$	Measured mean power for each carrier at the measurement equipment connector at the reference point D of the OTA measurement system
$P_{rated,c,EIRP}$	Rated EIRP when all the transmitter units are operating at their rated output power for a single carrier
$P_{rated,c,TRP}$	Rated *total radiated power* when all the transmitter units are operating at their rated output power for a single carrier
R_{sph}	Radius of the smallest sphere enclosing the BS
TRP_d	TRP values of the desired signal (ACLR calculation)
TRP_e	TRP values of the emissions (ACLR calculation)
$TRP_{Estimate}$	Numerically approximated TRP
$TRP_{Reference}$	Theoretical TRP
u_c	Combined uncertainty
u_e	Expanded uncertainty
u_i	Standard uncertainty
ΔTRP	TRP correction factor
λ	Wavelength

3.3 Abbreviations

For the purposes of the present document, the abbreviations given in TR 21.905 [1] and the following apply. An abbreviation defined in the present document takes precedence over the definition of the same abbreviation, if any, in TR 21.905 [1].

1D CATR	One Dimensional Compact Range
AA	Antenna Array
AAS	Active Antenna System
ACLR	Adjacent Channel Leakage Ratio
ACS	Adjacent Channel Selectivity
AoA	Angle of Arrival
BFN	Beam Forming Network
BS	Base Station
BW	Bandwidth
CACLR	Cumulative ACLR

CATR	Compact Antenna Test Range
D	Largest dimension of the antenna of BS
EIRP	Equivalent Isotropic Radiated Power
EIS	Equivalent Isotropic Sensitivity
EMC	Electromagnetic compatibility
EVM	Error Vector Magnitude
FF	Far Field
FR	Frequency Range
HPBW	Half Power Beamwidth
IAC	Indoor Anechoic Chamber
LA	Local Area
LAA	Licensed Assisted Access
LNA	Low Noise Amplifier
MR	Medium Range
MU	Measurement Uncertainty
NF	Near Field
NFTR	Near Field Test Range
NR	New Radio
OBUE	Operating Band Unwanted Emissions
OSDD	OTA Sensitivity Direction Declaration
OTA	Over-the-Air
PD	Power Density
PTF	Power Transfer Function
PWS	Plane Wave Synthesizer
QZ	Quiet Zone
RC	Reverberation Chamber
RDN	Radio Distribution Network
REF TX ant	Reference transmitter antenna (for Reverberation Chamber)
RIB	Radiated Interface Boundary
RoAoA	Range of Angles of Arrival
RSS	Root of the Sum of the Squares
SA	Signal Analyser
SE	Summation Error
SEM	Spectrum Emission Mask
SF	Sparsity Factor
SG	Signal Generator
SGH	Standard Gain Horn
TAE	Time Alignment Error
TRP	Total Radiated Power
TT	Test Tolerance
UID	Uncertainty Identifier
ULA	Uniform Linear Array
VNA	Vector Network Analyser
WA	Wide Area

4 Coordinate system

OTA requirements are stated in terms of electromagnetic and spatial parameters. The electromagnetic parameters are specified either in terms of power (dBm) or field strength (dBµV/m). The spatial parameters are specified in a Cartesian coordinate system (x, y, z) with an addition of spherical coordinates (r, Θ, ϕ) for manufacturer declared parameters.

The orientation of these coordinates is depicted in the following figures 4-1, 4-2 and 4-3. In figure 4-2, ϕ is the angle in the x/y plane and it is between the x-axis and the projection of the vector onto the x/y plane and is defined between -180° and +180°, inclusive. In figure 4-3, the angle Θ is the angle between the projection of the vector in the x/y plane and the vector and is defined between -90° and +90°, inclusive.

A point in the spherical coordinates (r, Θ, ϕ) can be transformed to Cartesian coordinate system (x, y, z) using the following relationships:

$$x = r\cos\Theta\cos\phi$$

$$y = r\cos\Theta\sin\phi$$

$$z = -r\sin\Theta$$

The inverse transformation from Cartesian coordinate system (x, y, z) to spherical coordinates (r, Θ, ϕ) is given by:

$$r = \sqrt{x^2 + y^2 + z^2}$$

$$\Theta = -\arcsin\frac{z}{\sqrt{x^2 + y^2 + z^2}}$$

$$\phi = \begin{cases} \arctan\frac{y}{x}, x \geq 0 \; and \; y \geq 0 \\ \arctan\frac{y}{x} + 180^\circ, x < 0 \; and \; y \geq 0 \end{cases}$$

$$-\phi = \begin{cases} \arctan\frac{y}{x}, x \geq 0 \; and \; y < 0 \\ \arctan\frac{y}{x} - 180^\circ, x < 0 \; and \; y < 0 \end{cases}$$

The representation of angles are described in figure 4-1, figure 4-2 and figure 4-3.

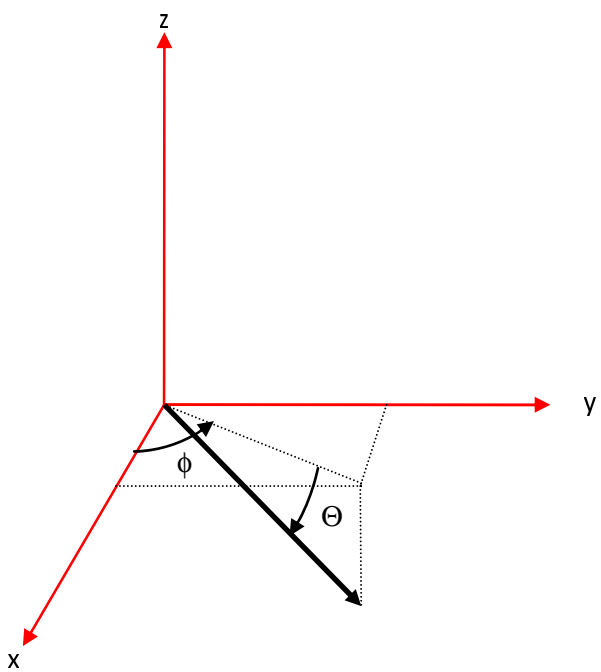

Figure 4-1: Coordinate system representation in Cartesian coordinate system

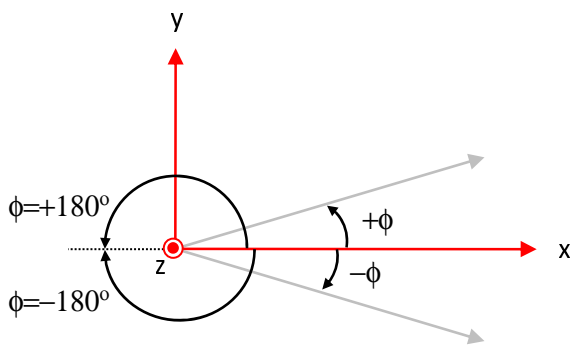

Figure 4-2: Representation of the ϕ angle (positive and negative values)

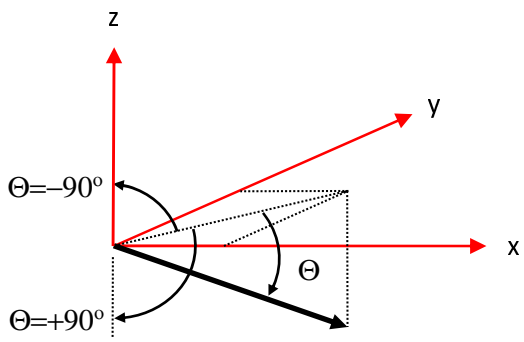

Figure 4-3: Representation of Θ angle (positive and negative values)

For the conformance requirements purposes in TS 37.145-2 [4] and TS 38.141-2 [6] the manufacturer declares this coordinate system reference point as a location in reference to an identifiable physical feature of the BS enclosure. The manufacturer also declares the orientation of this coordinate system in reference to an identifiable physical feature of the BS enclosure.

Another conventions for spatial angles are also used and can be found in definitions in IEEE Standard Test Procedures for Antennas [7] as shown in figure 4-4, figure 4-5 and figure 4-6. Such a convention is used in the TRP expression, e.g. as in clause 6.3. In figure 4-5, the angle ϕ is defined for positive values only, that is, from 0 ° to 360 °, inclusive. In figure 4-6, the angle θ corresponds to Θ in figure 4-3, but it is important to note that θ is formed by the positive z-axis and the vector and is defined between 0° and +180 °, inclusive.

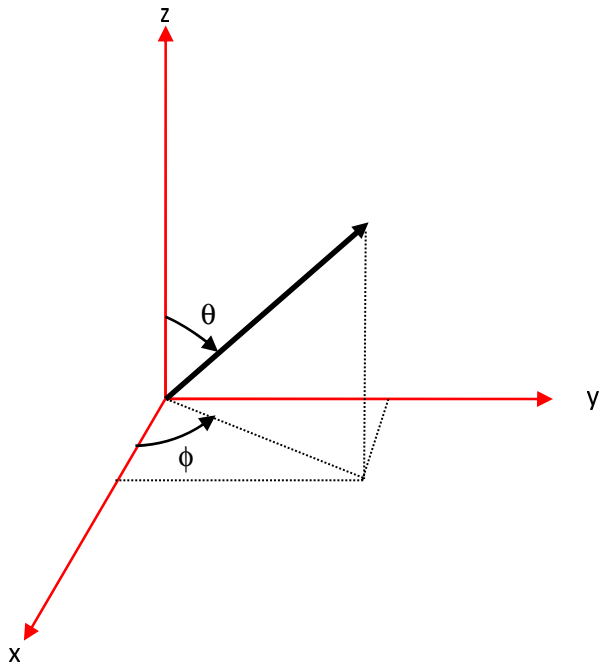

Figure 4-4: Another coordinate system representation in Cartesian coordinate system

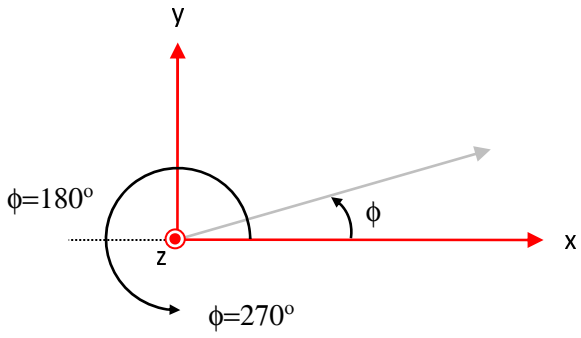

Figure 4-5: Another representation of the ϕ angle (positive values only)

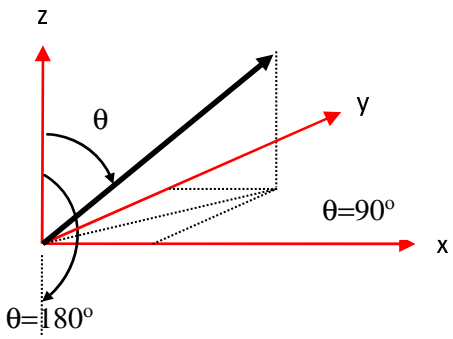

Figure 4-6: Another representation of θ angle (positive values only)

5 Conformance testing aspects

5.1 Conformance testing framework

Traditionally when calculating the MU for the conducted tests it was sufficient to analyse a single test method, while for OTA tests the chamber is an integral part of the test environment and it is important to derive MU based on multiple chamber types and test methodologies. As such a framework has been developed to estimate MU's for different test methods and compare them equally.

The following 11 points have been agreed as a framework for developing OTA test:

1) Multiple test methods may exist for each requirement.

2) Each test method will require its own test procedure.

3) A single conformance requirement applies for each core requirement, regardless of test procedure.

4) Common maximum accepted test system uncertainty applies for all test methods addressing the same test requirement. Test methods producing significantly worse uncertainty than others at comparable cost should not impact the common maximum accepted test system uncertainty assessment.

5) Common test tolerances apply for all test methods addressing the same test requirement.

6) A common way of establishing the uncertainty result from all test methods' individual budgets is established.

7) A common method of making an uncertainty budget (not a common uncertainty budget) is established.

8) Establish budget format examples for each addressed test method in the form of lists of uncertainty contributions. Contributions that may be negligible with some BS and substantial with others should be in this list. For each combination of measurement method and test parameter, develop a list with measurement uncertainties.

9) Describe potential OTA test methods relevant for testing radiated requirements (e.g. directional, TRP, or co-location requirements). The description requires information about the applicable test range architectures and test procedures. Addressing each item in each uncertainty budget with respect to the expected distribution of the errors, the mechanism creating the error and how it interacts with properties of the BS.

10) Providing example uncertainty budgets will be useful in order to demonstrate the way a budget should be defined and how calculating its resulting measurement uncertainty is done, but the figures used in the examples will clearly be only examples and not applicable in general.

11) Each test instance may require an individual uncertainty budget applicable for the combination of the test facility, the BS and the test procedure and property tested. Here, the tester demonstrates that the uncertainty requirement is fulfilled during the conformance testing.

The linking of core requirements via OTA test methods to conformance requirements is depicted in figure 5.1-2.

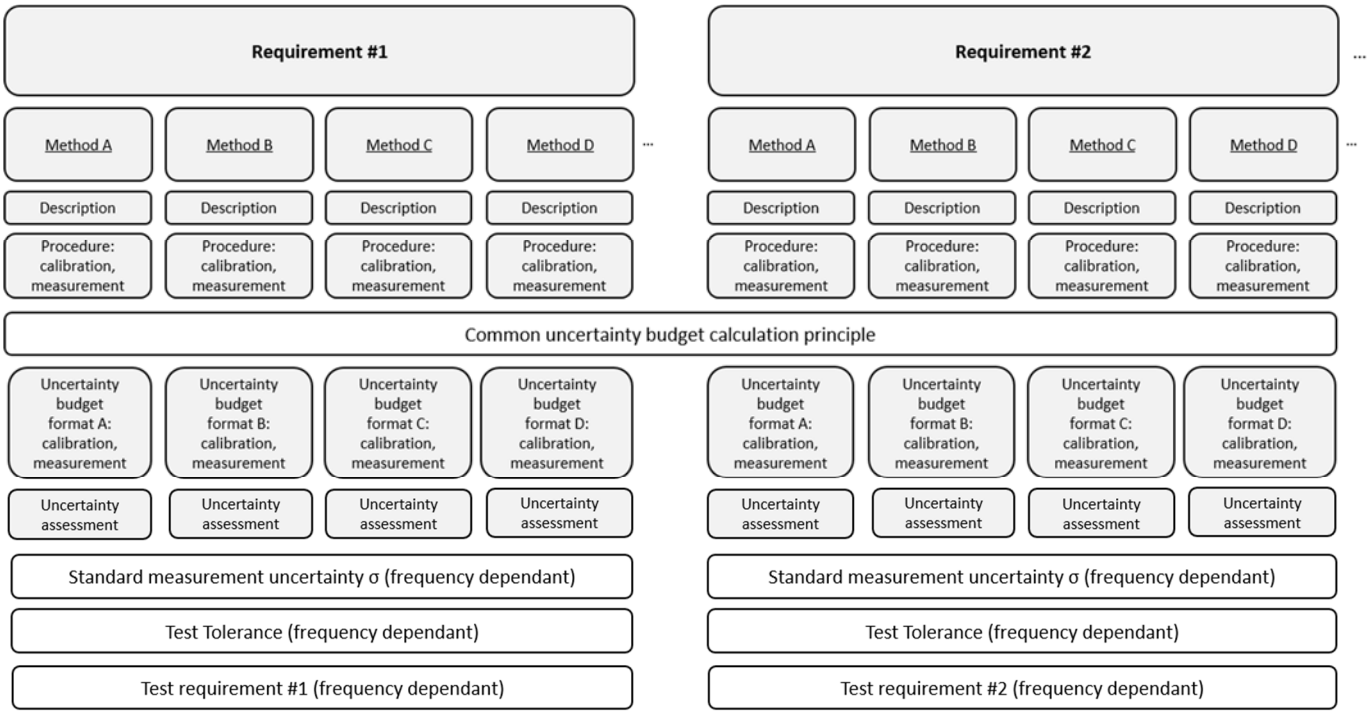

Figure 5.1-2: Examples of OTA core requirement to test requirement mapping

For *TRP requirements* the OTA conformance testing framework also considers additional aspects of the TRP measurements as detailed in clause 6.3. Depending on the TRP measurement procedure those additional aspects are, e.g. TRP sampling grids, additional MU contributors, *TRP summation error*, or ΔTRP correction factor, if applicable.

5.2 Uncertainty budget calculation principles

Uncertainty contributions listed in clauses 9 – 15 with descriptions in annex A to C need to be calculated to provide an overall total measurement uncertainty for each OTA test method for the accompanying conformance requirement.

The uncertainty tables are presented with two stages:

- Stage 1: the calibration of the absolute level of the BS measurement results is performed by means of using a calibration antenna (for example a standard gain horn) whose absolute gain is known at the frequencies of measurement,
- Stage 2: the actual measurement with the BS as either the transmitter or receiver (depending on the considered requirement) is performed.

The final uncertainty budget should comprise of a minimum 5 headings:

1) The uncertainty source,
2) Uncertainty value,
3) Distribution of the probability,
4) Divisor based on distribution shape,
5) Sensitivity coefficient c_i and its calculated standard uncertainty u_i (based on uncertainty value, divisor and sensitivity coefficient c_i).

NOTE: All measurement uncertainty contributions are assumed independent. Measurement uncertainty contributor's values in tables are given in log scale.

The calculation of the uncertainty contribution is based on the ISO Guide on Evaluation of measurement data in [8] to the expression of uncertainty in measurement. Each individual uncertainty is expressed by its standard deviation (termed as 'standard uncertainty') and represented by symbol u_i.

The procedure for forming the uncertainty budget can be as follows:

1) Compile lists of individual uncertainty contributions for the requirement specific measurement, both in Stage 1 (i.e. Calibration measurement) and Stage 2 (i.e. BS measurement).

2) Determine the standard uncertainty of each contribution u_i by:

   a) Determining the distribution of the uncertainty (i.e. Gaussian, U-shaped, rectangular, or exponentially normal).

   b) Determining the maximum value of each uncertainty (unless the distributions is Gaussian).

   c) Calculating the standard uncertainty by dividing the uncertainty by $\sqrt{2}$ if the distribution is U-shaped, by 2 if the distribution exponentially normal and by $\sqrt{3}$ if the distribution is rectangular.

   d) Multiplying the standard uncertainty by the sensitivity coefficient c_i.

3) Convert the units into decibel, if necessary.

4) Combine all the standard uncertainties by the Root of the Sum of the Squares (RSS) method.

5) Combine the uncertainties in Stage 1 and Stage 2 into the combined uncertainty u_c also by the RSS method:

$$u\ u = Uc,DUT\ measurement2 + Uc,calibrate\ measurement2$$

6) Multiply the result of the combined uncertainty u_c by an expansion factor of 1.96 to derive expanded uncertainty u_e at 95 % confidence level:

$$u_e = 1.96\ u_c$$

7) For *TRP requirements* where multiple directional measurements have been taken add the *TRP summation error* (SE) to the combined uncertainty u_c using RSS method.

$$Total\ Uncertainy_{TRP} = \sqrt{U_u^2 + SE^2}$$

The above procedure calls for forming a list of uncertainty contributors in step 1, followed by an assessment of each in the following steps. This process traditionally results in 2 tables, e.g. as captured in the legacy technical reports in. The 1st table consisting of an uncertainty budget with a list of contributors, their associated UID and reference to a full description. The 2nd table carrying out the uncertainty assessment of uncertainty contributions listed in the 1st table.

In this report there are many tables so to keep the document manageable the full documentation method is used just for a single requirement type (i.e. EIRP accuracy, Normal test conditions in clause 9.2) in order to demonstrate the process for all considered chamber types. For the all the remaining requirements the same process is followed and the data in the 2 tables is merged into a single one (e.g. as in table 9.3.2.3-1) in order to save space in the report. In the merged table the UID column contains the annex where the uncertainty contributor description is given.

6 Measurement types

6.1 Spatial definitions

Spatial definitions for classification of the OTA requirements were introduced below. OTA transmitter requirements can be split into either:

1. Directional requirements: The BS manufacturer declares beam(s) and coverage ranges over which the beam can be steered. Directional requirement type does not imply the requirement is defined only in one direction as many directional requirements have a number of compliance directions. It implies that the directional requirement applies to a single direction at a time.

2. *TRP requirements*: TRP is a requirement, which is defined as the total power radiated by the BS in all radiation space.

3. Co-location requirements: Co-location requirements are based on assumption that the BS is co-located with another BS of the same base station class. Co-location requirements ensure that both co-located systems can operate with minimal degradation to each other.

NOTE: Co-location requirements are only applicable in FR1, i.e. for OTA AAS BS, or for *BS type 1-O*.

6.2 Directional measurements

6.2.1 General

The test requirements of the BS directional requirements may be placed on one or more manufacturer declared beam(s) that are intended for cell-wide coverage.

Some example directional requirements are defined with respect to an isotropic antenna in terms of EIRP and EIS. EIS is related to the power density of a plane wave incident on the BS when the power level in the receiver is at the sensitivity level.

6.2.2 Beam parameter definitions

A beam (of the antenna) is the main lobe of the *radiation pattern* of an *antenna array* of the BS. A beam is created by means of a superposition of the signals radiated from different parts of the *antenna array*.

Each *beam direction pair* is associated with half-power contour of the *beam centre direction* and a *beam peak direction*. The EIRP is declared at the *beam peak direction*. The *beam centre direction* is used for describing beam steering.

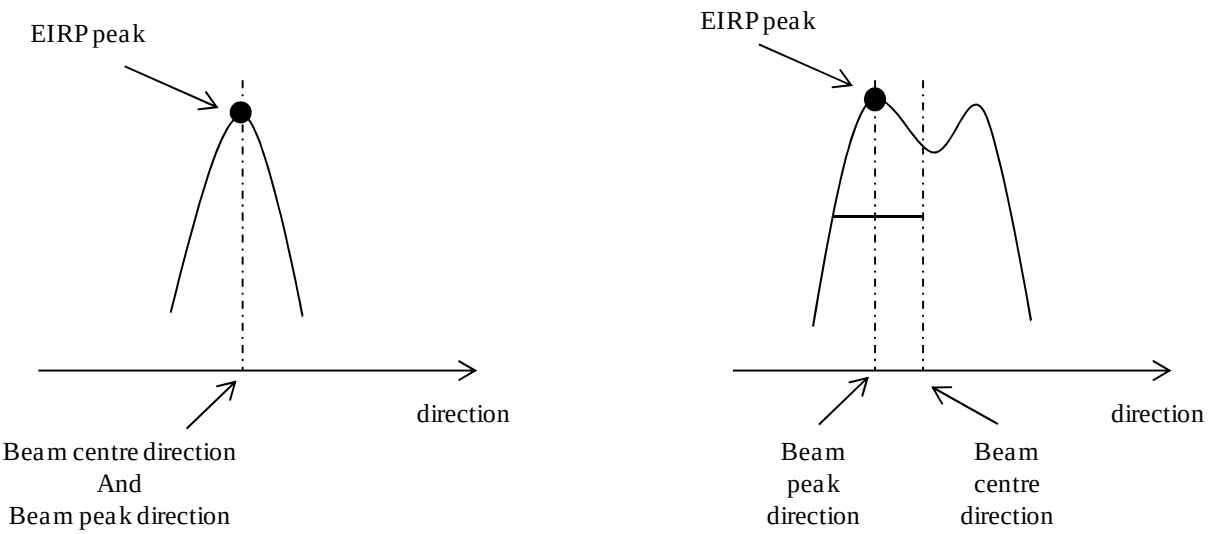

Figure 6.2.2-1: Example of *beam direction pair*

In figure 6.2.2-1 left sub-figure shows a symmetrical beam where *beam centre direction* and *beam peak direction* are the same. In figure 6.2.2-1 right sub-figure shows an example of a beam with ripple where the *beam centre direction* and the *beam peak direction* are different.

The number of declared BS beams is for the manufacturer to declare. Some examples of declarations of beams are illustrated in a *directions diagram* in figure 6.2.2-2.

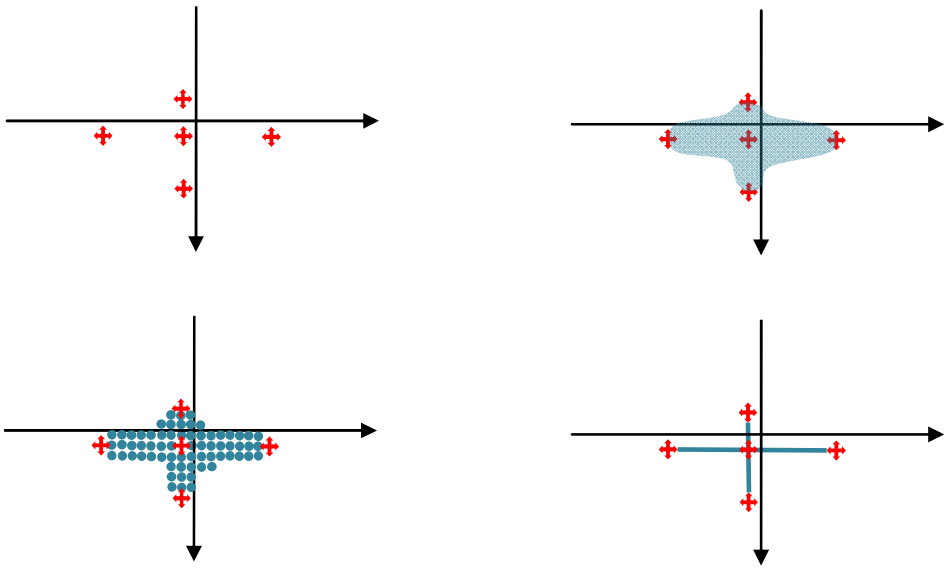

Figure 6.2.2-2: Examples of BS beam declarations depicted in a *directions diagram*

In figure 6.2.2-2 the shaded areas/points represent the declared EIRP directions set, which may be continuous (top right, bottom right) or not continuous (bottom left), or be restricted to just the points of maximum steering (top left). The red coloured points represent the compliance test points at which EIRP is declared. The maximum EIRP and its accuracy are defined for the declared beams when activated individually on all corresponding RE and the requirements are placed per individual beam.

The maximum radiated transmit power of the BS beam is the mean power level measured at the declared *beam peak direction* at the RF channels B (bottom), M (middle) and T (top) when configured for maximum EIRP value for a specific BS beam of the supported frequency channels declared by the manufacturer.

Another form of directional measurement is the *OTA sensitivity directions declaration(s)* (OSDD) used for the receiver directional requirements. OSDD is declared for OTA sensitivity requirement and described in more details in clause 6.2.3.

6.2.3 OSDD

If an OSDD does not include a *receiver target redirection range*, conformance testing is performed for the following five directions, as depicted in the example in figure 6.2.3-1:

- The *receiver target reference direction*.
- The direction determined by the maximum ϕ value achievable inside the *sensitivity RoAoA* maintaining the receiver target reference direction Θ value.
- The direction determined by the minimum ϕ value achievable inside the *sensitivity RoAoA* maintaining the *receiver target reference direction* Θ value.
- The direction determined by the maximum Θ value achievable inside the *sensitivity RoAoA* maintaining the *receiver target reference direction* ϕ value.
- The direction determined by the minimum Θ value achievable inside the *sensitivity RoAoA* maintaining the *receiver target reference direction* ϕ value.

The manufacturer declares the five directions for conformance testing.

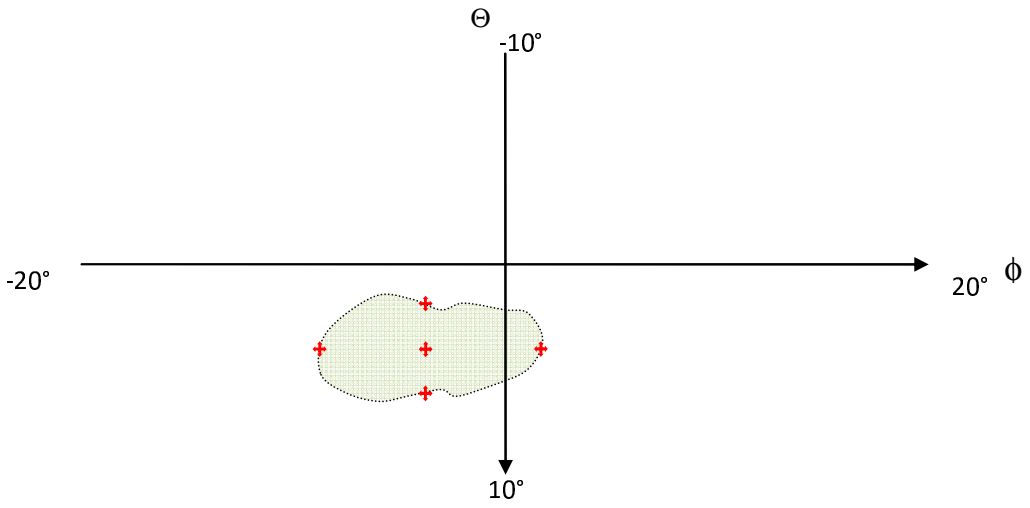

Figure 6.2.3-1: OSDD without target redirection capability

In figure 6.2.3-1 a direction diagram shows a RoAoA without *receiver target* redirection capability. The *receiver target reference direction* and the extreme directions subject to conformance testing are marked by red crosses.

If an OSDD includes a *receiver target redirection range*, conformance testing is performed for the following five directions, as depicted in the example in figure 6.2.3-2:

- The *receiver target reference direction*.
- The direction determined by the maximum ϕ value achievable inside the *receiver target* redirection range maintaining the *receiver target reference direction* Θ value.
- The direction determined by the minimum ϕ value achievable inside the *receiver target* redirection range maintaining the *receiver target reference direction* Θ value.
- The direction determined by the maximum Θ value achievable inside the *receiver target* redirection range maintaining the *receiver target reference direction* ϕ value.

- The direction determined by the minimum Θ value achievable inside the *receiver target* redirection range maintaining the *receiver target reference direction* ϕ value.

The manufacturer declares the five directions for conformance testing, the setting of the BS to achieve conformance at each of the conformance test directions, and the resulting *sensitivity RoAoA* for each of these settings.

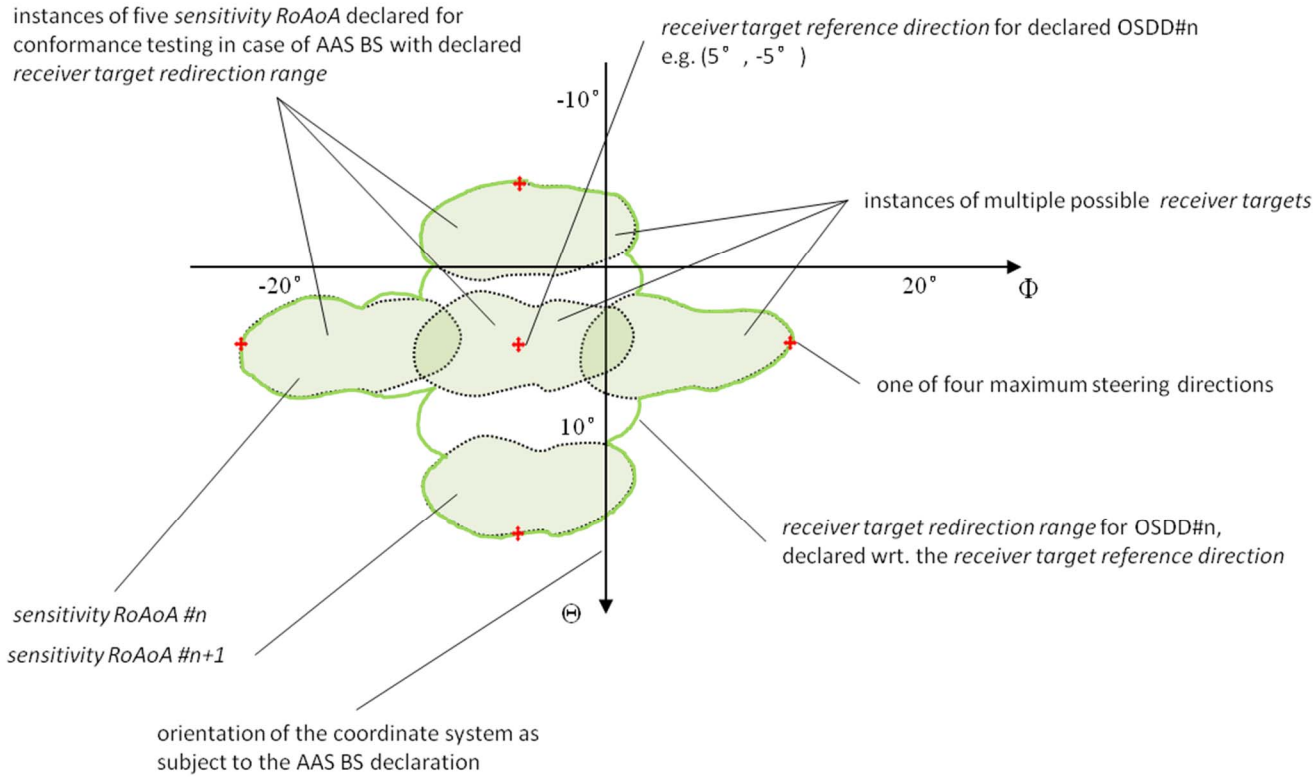

Figure 6.2.3-2: OSDD with target redirection capability

In figure 6.2.3-2, a direction diagram is showing a *receiver target redirection range* (with discrete settings for the *sensitivity RoAoA*). The *receiver target reference direction* and the extreme directions subject to conformance testing are marked by red crosses. The *sensitivity RoAoA* for each conformance test setting is shown as shaded. Note that each *sensitivity RoAoA* is exceptionally small compared to the *receiver target redirection range*, for demonstration purposes.

6.3 TRP measurement

6.3.1 General

The TRP or the radiated power is the total power radiated by a BS. Due to energy conservation, TRP is independent of the choice of test distance.

$TRP_{Reference}$ is defined as the integral of the BS's far field *radiation pattern* over a spherical surface

$$TRP_{Reference} = \int_{\theta=0}^{\pi} \int_{\phi=0}^{2\pi} U(\theta,\phi)\ \sin\theta\, d\theta d\phi$$

,

where $U(\theta, \phi)$ is the radiation intensity at each angle in watts per Steradian.

In the far field, the radiation intensity can be also be expressed in terms of power flux density

$$TRP_{Reference} = \oiint \underbrace{Re\left(\vec{E} \times \vec{H}^*\right).\hat{n}}_{P_D}\, dS$$

Where:

$Re\left(\vec{E} \times \vec{H}^*\right) =$ the time average of the Poynting vector (average power density) or the power flux of the electromagnetic field, where $\vec{E}$ and $\vec{H}$ are effective values of the time-harmonic electric- and magnetic-field intensities, respectively. Furthermore, Re denotes real part, H^* denotes the complex conjugate of H and × is vector cross product.

$P_D = Re\left(\vec{E} \times \vec{H}^*\right).\hat{n} =$ average power density in watts per square metre, which is a scalar.

$\hat{n} =$ unit vector normal to the closed surface S.

$dS =$ infinitesimal area of the closed surface.

For practical reasons, a sphere of radius r is a common choice for the closed surface, but also other surfaces can be considered e.g. cylinder and planar surface. The spherical coordinate system defined in clause 4is assumed.

In the far field limit (i.e. $r \to \infty$), the $\vec{E}(r,\theta,\phi)$ and $\vec{H}(r,\theta,\phi)$ fields consist of the tangential components ($\vec{E}_t(r,\theta,\phi)$ and $\vec{H}_t(r,\theta,\phi)$), respectively) and the radial components ($\vec{E}_r$ and $\vec{H}_r$) are negligible, and, therefore, $\left|\vec{H}_t\right| = \frac{\left|\vec{E}_t\right|}{\eta}$, where η is the intrinsic impedance of vacuum. Thus, the TRP equation becomes

$$TRP_{Reference} = \int_{\theta=0}^{\pi}\int_{\phi=0}^{2\pi} Re\left(\vec{E}_t \times \vec{H}_t^*\right).\hat{n}r^2 \sin\theta\, d\theta\, d\phi = \int_{\theta=0}^{\pi}\int_{\phi=0}^{2\pi} \underbrace{\left|\vec{E}_t\right|\left|\vec{H}_t^*\right|}_{P_D(r,\theta,\phi)} r^2 \sin\theta\, d\theta\, d\phi$$

where $P_D(r,\theta,\phi) = \frac{\left|\vec{E}_t(r,\theta,\phi)\right|^2}{\eta}$.

The radiation intensity in the far field region in watts per Steradian is

$$U(\theta,\phi) = r^2 P_D(r,\theta,\phi)$$

The power density can be expressed in terms of EIRP as

$$P_D(r,\theta,\phi) = \frac{EIRP(\theta,\phi)}{4\pi r^2}$$

and when r is large, radiation intensity is proportional to $1/r^2$ hence in the far field region $P_d \sim 1/r^2$ and P_d multiplied with r^2 becomes roughly constant value. Thus the radiation intensity equation can be defined as

$$U(\theta,\phi) = \frac{EIRP(\theta,\phi)}{4\pi}$$

Thus, the definite integral for $TRP_{Reference}$ can be also expressed as

$$TRP_{Reference} = \frac{1}{4\pi}\int_{\theta=0}^{\pi}\int_{\phi=0}^{2\pi} EIRP(\theta,\phi)\ \sin\theta\, d\theta d\phi$$

EIRP is defined only in the far- field. However, in some occasions the power measurements can be performed at distances less than $2d^2/\lambda$ (i.e. the traditional approximate far-field distance boundary). In such cases it is may be possible to measure power density in the radiative near- field considering only the magnitude of the tangential part of E field (i.e. $|E_t(r,\theta,\phi)|$) with an acceptable level of accuracy as demonstrated in [10], where it is presented that the TRP is well approximated by the integral of $|E_t|^2/\eta$ over the same sphere.assuming far field conditions. Thus $TRP_{Reference}$ can be expressed as

$$TRP_{Reference} = \int_{\theta=0}^{\pi}\int_{\phi=0}^{2\pi} r^2 P_D(r,\theta,\phi)\ \sin\theta\, d\theta d\phi$$

As mentioned, for near-field measurements use the approximation where $P_D(r,\theta,\phi) = \frac{|E_t(r,\theta,\phi)|^2}{\eta}$ and $\eta = \sqrt{\frac{\mu_0}{\varepsilon_0}} \approx$ 377 Ω (intrinsic impedance of vacuum).

The minimum distance between the measurement antenna and the smallest sphere enclosing the BS must be at least 2λ and the test distance must be at least the far-field distance of the measurement antenna when considering the TRP measurements under far field conditions. More details about the necessary conditions for accurate power density-based measurements close to BS are included in annex F.

When measuring radiated power, at each measurement point, two partial results for two orthogonal polarizations needs to be summed. These can be the θ and ϕ polarizations or any pair of orthogonal polarizations.

The distribution of sampling points on the spherical surface depends on the type of sampling grids applied, the frequency and the size of the radiating source. In the following clauses, several spherical sampling grids which can be applied to EIRP or power density measurements are described.

6.3.2 TRP measurement procedures

6.3.2.1 General

Different procedures can be used to evaluate the TRP estimate. These procedures can provide either an *accurate* assessment or a controlled *overestimate* of the TRP. The choice of methods is based also on the available test setup, measurement equipment, and the measurement time. This clause describes the methods which are suitable for each type of requirements. Other relevant methods are not precluded. For each method, the test purpose (accurate or overestimate) is pointed out. A summary of TRP measurement procedures and their applicability to different OTA BS requirements is shown in table 6.3.2.1-1.

In the following clauses the measurement procedures for different parameters are described under the assumption of equal angle sampling. Similar procedures can be also used with other types of spherical grids, given that the proper reference steps $\Delta\theta_{ref}$ and $\Delta\phi_{ref}$ are determined.

NOTE: OTA FR2 transmit ON/OFF power is excluded from the table although the core requirement is specified as TRP because conformance is verified through EIRP measurements.

Table 6.3.2.1-1: Applicability of TRP measurement methods and chambers to the type of emissions to be measured

		BS output power	Unwanted emissions: ACLR (Note 1)	Unwanted emissions: SEM, OBUE	Spurious emissions (Note 7)
Methods applicable to anechoic chambers	Full sphere using reference steps (accurate)	X	X	X	X (Note 2)
	Full sphere using sparse sampling (overestimate)				X (Note 2, 3)
	Two cuts + Pattern multiplication (accurate) (Note 4)	X	X	X	
	Two/three cuts (overestimate)		X	X	X (Note 2, 3)
	Beam-based directions	X	X (Note 5)	X (Note 5)	
	Peak method			X	X (Note 2)
	Equal sector with peak average			X	X (Note 2)
	Pre-scan (Note 2)		X	X	X
Reverberation chamber		X	X	X	X (Note 2)

Note 1: Two TRP measurements are needed.
Note 2: Pre-scan is needed to identify the frequencies of interest. Pre-scan can also be applied to ACLR, OBUE and SEM.
Note 3: At harmonic frequencies the use of this method is not applicable.
Note 4: Pattern multiplication is conditional.
Note 5: Applicable if the directivity of corresponding requirement at the reference direction is equivalent to the directivity at the reference direction when BS emits $P_{rated,c,TRP}$ and $P_{rated,c,EIRP}$.
Note 6: If box is blank the method is not excluded but the methodology has not been described in clause 6.3.3 on angular alignment in TRP measurements; if a suitable analysis is shown the method may be applied.
Note 7: Applicability of any chamber for the spurious emissions measurements is subject to the supported frequency range of the chamber, and specifically its upper frequency limit.

The *TRP summation error* is based on a reasonable number of test directions, for the reference steps please see figure 6.3.4.2-1. These steps depend on antenna size and frequency and correspond to the minimum beam width. It has been agreed that a reasonable trade-off between accuracy and sampling is achieved when the SE is 0.75 dB for FR1 and 1.2 dB for FR2. For FR2, the beams are expected to be narrower than an FR1 and hence the SE is higher. For the SE derivation, refer to clause 6.3.6.

6.3.2.2 Procedures for BS output power

6.3.2.2.1 General

Test purpose: Accurate TRP assessment.

The radiation source is assumed to be limited to the antennas on the BS and it's not necessary to take the dimensions of the whole BS into account for calculations of the far-field distance and the reference angular resolution. The test choices are as follows.

6.3.2.2.2 Two cuts with pattern multiplication

Use this method when the antenna symmetries are compatible with pattern multiplication, see clause 6.3.4.5 (orthogonal cuts grids). Following steps are performed during the measurement:

1. Calculate the reference angular steps as described in clause 6.3.4.2 (reference angular step criteria).
2. Align the BS to allow for proper pattern multiplication. Measure EIRP on two orthogonal cuts with steps smaller or equal to the reference steps according to step 1.
3. Apply pattern multiplication to extrapolate the two cuts data to full-sphere.
4. Apply numerical integration to obtain the $TRP_{Estimate}$.

6.3.2.2.3 Full sphere

Following steps are performed during the measurement:

1. Calculate the reference angular steps as described in clause 6.3.4.2 (reference angular step criteria). Other methods for determining the required angular steps are not precluded.
2. Choose the angular steps smaller than or equal to the reference angular steps.
3. Measure EIRP values on a spherical grid according to clause 6.3.4.1 (spherical equal angle grids). Having the poles of the measurement grid along the direction of the main beam shall be avoided.

NOTE: Spherical grids of clause 6.3.4.3 (spherical equal area grids), clause 6.3.4.4 (spherical Fibonacci grids) and clause 6.3.4.6 (wave vector space sampling grids) can also be used with proper angular steps.

4. Apply suitable numerical integration to calculate the $TRP_{Estimate}$.

6.3.2.2.4 Beam-based directions

This method is only applicable if directivity of BS antenna is known for the operating frequency. The peak EIRP of a beam is measured at the *beam peak direction* within the *beam direction pair*. Following the same approach, the peak EIRP of a beam can be obtained, which is used to derive $TRP_{Estimate}$ using directivity of BS antenna as follows:

$$TRP_{Estimate} = \frac{EIRP_{peak}}{D_{BS}}$$

, where D_{BS} is the directivity of BS.

For the case of OTA BS output power, the directivity ($D_{BSoutputpower}$) shall be defined as:

$$D_{BSOutputpower} = \frac{P_{rated,c,EIRP}}{P_{rated,c,TRP}}$$

6.3.2.3 Procedures for SEM and OBUE

6.3.2.3.1 General

Test purpose: Accurate or controlled overestimate of TRP.

The radiation source is limited to the antennas on the BS and it's not necessary to take the dimension of the whole BS into account for calculations of the far-field distance and the reference angular steps. The test choices are as follows.

6.3.2.3.2 Two cuts with pattern multiplication

Use the same procedure as in clause 6.3.2.2.2 (i.e. two cuts with pattern multiplication for BS output power).

6.3.2.3.3 Two or three cuts

Use this method when the cuts described in clause 6.3.4.5 (orthogonal cuts grids) can be identified, but the pattern multiplication is not applicable according to the requirements in clause 6.3.4.5. This method will provide an overestimated value for TRP. Following steps are performed during the measurement.

1. Calculate the reference angular steps as in clause 6.3.4.2 (reference angular step criteria).
2. Measure EIRP on two orthogonal cuts with angular steps smaller than or equal to the reference steps according to step 3. Align the BS such that the cardinal cuts are measured. See figure 6.3.4.5-1.
3. Calculate the average EIRP in each cut and then the $TRP_{Estimate}$ according to clause 6.3.4.5 (orthogonal cuts grids).
4. If the TRP estimate is above the requirement limit, perform the measurement on a third cut (See figure 6.3.4.5-1) and repeat step 3.

6.3.2.3.4 Full sphere

Use the same procedure as in clause 6.3.2.2.3 for full sphere with appropriate reference steps.

6.3.2.3.5 Beam-based directions

This method only applicable if directivity of BS antenna is available for the downlink operating band plus Δf_{OBUE} on either side of the band edge. Refer to clause 6.3.2.2.4 for more details.

The pre-scan (refer to clause 6.3.2.5.2), peak (refer to clause 6.3.2.5.3) and equal sector with peak average methods (refer to clause 6.3.2.5.4) are possible options.

6.3.2.4 Procedures for ACLR

6.3.2.4.1 General

Test purpose: Accurate or controlled underestimate of ACLR.

The methods described in this clause are used for assessment of the TRP values for ACLR. Depending on the method, the result can be accurate or a controlled underestimate of the ACLR. The latter applies if the TRP of the radiation in the adjacent band is overestimated. The radiation source is limited to the antennas on the BS and it's not necessary to take the dimension of the whole BS into account for calculations of the far-field distance and the reference angular steps.

6.3.2.4.2 TRP fraction method

Following steps are performed during the measurement.

1. For the TRP of the desired signal TRP_d use a suitable method from clause 6.3.2.2.
2. For the TRP of the emission TRP_e use a method from clause 6.3.2.3.
3. Evaluate the $\mathrm{ACLR} = \frac{\mathrm{TRP_d}}{\mathrm{TRP_e}}$.

6.3.2.5 Procedures for transmitter spurious emissions and EMC emissions

6.3.2.5.1 General

Test purpose of the procedures addressed in this clause is to measure accurate or controlled overestimate of TRP.

The methods described in this clause are used for assessment of the TRP for spurious emissions. The methods are given in a sequence with increasing accuracy, but also increasing measurement time. There is no mandatory order, in which to use these methods nor all of the methods should be used for evaluating TRP. Some of these methods can be skipped if they are deemed not necessary, for instance, the pre-scan and peak methods.

The radiation source is not limited to the antennas on the BS instead the entire physical dimensions of the BS must be taken into account for calculations of the reference angular steps, see clause 6.3.4.2 (reference angular step criteria). Note that full-sphere sampling using reference angular steps is the only method that aims to provide an accurate TRP.

When available, using a beam sweeping test signal with these methods can reduce the test time and improve the uncertainty.

NOTE: As name of this clause captures both transmitter spurious emissions and EMC emissions, it shall be clarified that in case of radiated measurements of OTA AAS BS, *BS type 1-O* or *BS type 2-O*, the RF radiated spurious emissions includes the EMC radiated emissions, as RF radiated spurious emissions and EMC radiated emissions cannot be distinguished in the OTA measurement setup.

6.3.2.5.2 Pre-scan

Pre-scan is a fast measurement method, which is performed over the entire spurious frequency range to identify spurious frequencies with emission power levels above a threshold. Note, it is not necessary to do pre-scan before executing the test methods in this clause, but it is recommended. It is also not meant to provide an estimate of TRP. Hence, other relevant test methods should be used for TRP estimation.

1. The distance can be shorter than the intended measurement distance between BS and the test antenna for evaluating TRP but should remain fixed throughout the scanning process.
2. Scan the surface around the BS.
3. Rotate the measurement antenna to cover all polarizations of emissions to detect the maximum emission.
4. Record the list of spurious emission frequencies and corresponding power levels, spatial positions of BS and test antenna polarization where the maximum power levels occurred.
5. For spurious frequencies with emission power levels more than 20 dB below the specified limit in then these spurious frequencies are considered compliant and no further measurements are required.
6. For all the other spurious frequencies that do not meet the criterion in step 5, further measurements are required.

6.3.2.5.3 Peak method

This method is applicable when the pre-scan method indicates the presence of emission peaks. The peak method can be skipped if there exist no emission peaks. Further, the method does not provide a TRP estimate instead the highest absolute EIRP is measured at each spurious frequency identified in the pre-scan. If the absolute EIRP meets the specified TRP limit, then it implies that the TRP estimate would meet the limit too. As a result, it is not needed to perform further measurement using the other methods.

1. Find the direction of the peak emission EIRP or peak power density.
2. Start with the spurious frequency that has the maximum power level recorded during pre-scan.
3. The BS and test antenna are oriented to the same position where the maximum power level is recorded during the pre-scan.

NOTE: This set-up might not be applicable if pre-scan is performed in near-field.

4. BS and test antenna are moved around the position to identify and measure the peak EIRP.

5. If the peak EIRP for a spurious frequency is less than the specified limit then no further measurements are required else use the methods below to evaluate TRP estimates.

6. Repeat steps 4 to 6 for the next strongest emission.

6.3.2.5.4 Equal sector with peak average method

The equal sector with peak average method can be considered as an extension to the peak method. It is performed on the list of spurious frequencies which have not met the limit using the peak method. The method takes into account several peak EIRPs of beams belonging to different sectors of the sphere. $TRP_{Estimate}$ is calculated as the average of the peak EIRP in different sectors.

1. The measurement distance is in the far field.

2. The sphere is divided into *K* equal sectors. The total number of sectors depend on the dimensions of BS. If the largest dimension is less than 60 cm, then each sector is a half quadrant of 45 °. Other techniques for determining the sector size are not precluded such as using the angular step.

3. For those spurious frequencies which need further measurements by the peak method, start with the spurious frequency that has the highest recorded power level.

4. Perform steps 4 and 5 as in the peak method (see clause 6.3.2.5.3).

5. Move to the next sector with next higher emissions recorded and repeat step 4 until all sectors are covered.

6. Calculate TRP estimate as $TRP_{Estimate} = \frac{1}{K}\sum_{k=1}^{K} EIRP_k$, where $EIRP_k = EIRP_{k,p1} + EIRP_{k,p2}$ is in linear units.

7. Repeat steps 4 and 5 for at least 7 spurious frequencies with the next higher emission in descending order.

8. If TRP estimate for each of the 8 spurious frequencies is less than the specified limit then no further measurements are required else use the other methods to evaluate TRP estimates.

6.3.2.5.5 Two or three cuts with dense sampling

Following sequence can be used:

1. Follow steps described in clause 6.3.2.3.3 and calculate the $TRP_{Estimate}$. Note that no alignment is needed for spurious emissions.

2. Add the appropriate correction factor ΔTRP according to table 6.3.2.5.5-1 to ensure overestimation with 95% confidence.

3. Compare the ($TRP_{Estimate}$ + ΔTRP) to the limit.

4. If the ($TRP_{Estimate}$ + ΔTRP) is above the limit, perform the measurement on an additional third cut (see figure 6.3.4.5-1) and repeat steps 1 to 3.

Table 6.3.2.5.5-1: The correction factor for two or three cuts dense sampling

	Three cuts	Two cuts
Correction factor ΔTRP (dB)	2.0	2.5

6.3.2.5.6 Full sphere with sparse sampling

Sparse angular sampling with a correction factor can be used to save measurement time. The only difference is in the used angular steps. Following sequence can be used:

1. Set the angular grid:

   a. Non-harmonic frequencies: choose the angular steps $\Delta\phi$ and $\Delta\theta$ smaller than or equal to 15 °. Calculate the sparsity factor (SF) as:

$$\mathrm{SF} = \max\left(\frac{\Delta\phi}{\Delta\phi_{\mathrm{ref}}}, \frac{\Delta\theta}{\Delta\theta_{\mathrm{ref}}}\right)$$

and the correction factor as:

$$\frac{\mathrm{SF}-1}{\mathrm{SF}_{\max}-1}\ \mathrm{dB},$$

b. where $\mathrm{SF}_{\max}$ corresponds to 15 ° angular step. If the sparsity factor is smaller than 1, the correction factor ΔTRP is 0 dB. Harmonic frequencies with fixed beam test signal: choose the angular steps smaller than or equal to the reference angular steps $\Delta\phi_{ref}$ and $\Delta\theta_{ref}$. Correction factor ΔTRP is 0 dB.

c. Harmonic frequencies with beam sweeping test signal: set the angular steps to 15 °. Correction factor is ΔTRP 0 dB.

2. Measure EIRP (or power density multiplied by grid surface $4\pi d^2$) on a spherical grid according to clause 10.8.2. Having the poles of the measurement grid along the direction of the main beam shall be avoided.

NOTE: Other spherical grids can also be used with proper angular sampling.

3. Apply a suitable numerical integration to calculate the $\mathrm{TRP}_{\mathrm{Estimate}}$.

4. Add the appropriate correction factor ΔTRP according to step 1 to ensure an overestimation with 95% confidence.

5. Compare the ($\mathrm{TRP}_{\mathrm{Estimate}}$ + ΔTRP) with the limit. If the ($\mathrm{TRP}_{\mathrm{Estimate}}$ + ΔTRP) is above the limit, choose a smaller angular step and repeat steps 2 - 4. If the sparsity factor is less than one, no significant improvement of accuracy is expected.

6.3.2.5.7 Full sphere

Use the same procedure as in clause 6.3.2.2.3 for full sphere with appropriate reference steps.

6.3.3 Angular alignment in TRP measurements

For the TRP test methods relying on finding EIRP peak measurements, guidance on how to find the peak with acceptable accuracy is required.

The following test methods relies on finding peak EIRP:

1. Beam-based direction (clause 6.3.2.2.4)

2. Orthogonal cut grid (clause 6.3.4.5)

3. Peak method (clause 6.3.2.5.3)

4. Equal sector with peak average method (clause 6.3.2.5.4)

For the above procedures, measuring maximum EIRP accurately is critical to the accuracy of TRP estimates. If the maximum value is not accurately sampled, this will result in measurement errors. In the worst case, the measurement error is larger than the MU, which is not acceptable. The measurement error is caused by angular misalignment which is the difference (in degrees) between the actual and the measured angular positions of the intended maximum EIRP. Figure 6.3.3-1 shows an example of angular misalignment, where the measured EIRP is at an angle equal to -2° while the actual angular position of the maximum EIRP is at 0° in the *radiation pattern*. This results in an absolute measurement error = $|maximum\ EIRP - measured\ EIRP|$ = 1 dB.

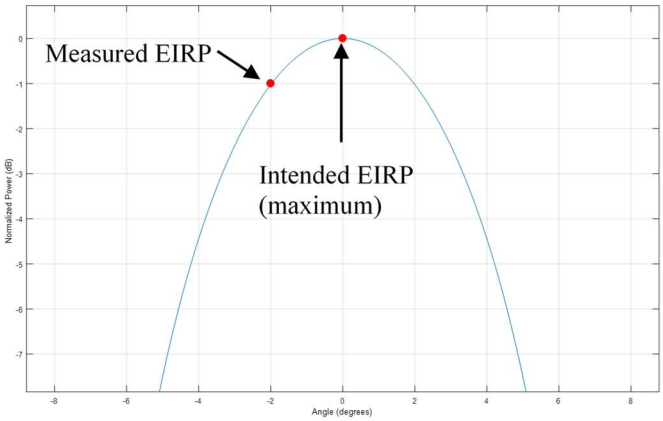

Figure 6.3.3-1: Angular misalignment

If the actual angular position of maximum EIRP is known (e.g., declared by manufacturers), measurement errors due to angular misalignment can be alleviated. However, if the actual angular position of maximum EIRP is not known, then the angular interval used in searching for the maximum EIRP employing the peak search method can contribute to the measurement errors due to angular misalignment. The search is performed in the proximity of the expected angular position of maximum EIRP (e.g., a broadside *radiation pattern*). To determine the magnitude of the measurement error caused by angular misalignment, the angular step size can be expressed in terms of half-power beam width (HPBW) of test beams. If the angular step size is set to HPBW, the absolute measurement error can be as large as 3 dB. Table 6.3.3-1 summarizes the maximum absolute measurement error versus different angular step sizes. The absolute measurement errors were derived assuming a linear approximation between the maximum EIRP and the 2 HPBW points as illustrated in figure 6.3.3-2. The linear approximation gives us the worst-case scenario as can be observed in figure 6.3.3-2.

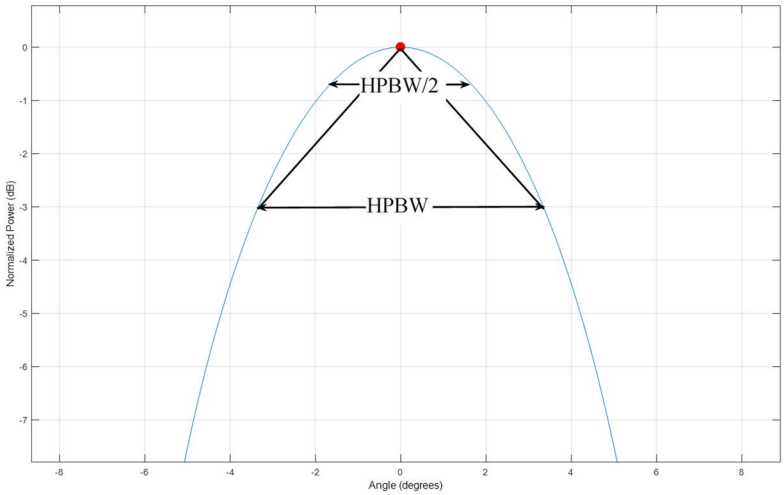

Figure 6.3.3-2: Linear approximation of measurement errors

Table 6.3.3-1: Sampling beam peak error due to misalignment error

Angular misalignment	Beam peak misalignment error (dB)
HPBW	3
$HPBW/_2$	1.5
$HPBW/_3$	1
$HPBW/_4$	0.75

Based on the measurement error in table 6.3.3-1, the measurement error should be within the *TRP summation error* to ensure the angular misalignment is not greater than $HPBW/_4$ (for f ≤ 3 GHz and 3 GHz < f ≤ 6 GHz), and $HPBW/_3$ (for 24.25 < f ≤ 29.5 GHz and 37 < f ≤ 43.5 GHz). Note, there is a trade-off between search time and angular misalignment (that is, the difference in actual and measured angular positions of intended peak EIRP). Larger misalignment for FR2 is reasonable since FR2 beams are in general narrower than FR1.

For the orthogonal cut procedure in clauses 6.3.2.2.2 and 6.3.2.3.2 (i.e. two cuts with pattern multiplication), angular step size smaller than the reference angular step may be desired as outlined in step 2. In order to sample half power EIRP in addition to the maximum EIRP, the angular step size may be set to $HPBW/_2$, where HPBW is the half-power beam width of the frequency under measurement.

6.3.4 TRP measurement grids

6.3.4.1 Spherical equal angle grid

With the spherical equal angle grid, the grid spacing is uniform in θ and ϕ directions. The range of θ angles from 0 to π is divided into N equally spaced subintervals and the range of ϕ angles from 0 to 2π is divided into M equally spaced subintervals. The width of each subinterval in the θ- and ϕ-angle is given as:

$$\Delta\theta = \frac{\pi}{N} \text{ and } \Delta\phi = \frac{2\pi}{M}$$

The total number of angular sampling points is equal to $(N + 1) \times M$.

Let n and m be the indices used to denote the nth θ and m^{th} ϕ angles, respectively. In practice, discrete samples of EIRP are measured at each sample point (θ_n, ϕ_m) by measuring its two orthogonally polarized components, $EIRP_{p1}(\theta_n, \phi_m)$ and $EIRP_{p2}(\theta_n, \phi_m)$. The EIRP sample are then used to approximate the definite integral for $TRP_{Reference}$ as the discrete average sum of EIRP measured at different θ and ϕ angles.

$$TRP_{Estimate} = \frac{\pi}{2NM} \sum_{n=1}^{N-1} \sum_{m=0}^{M-1} EIRP(\theta_n, \phi_m) \sin\theta_n.$$

The above equation can be simplified considering $\sin\theta_0 = \sin\theta_N = 0$. Thus the total number of angular sampling points is equal to (N – 1)M.

NOTE: $TRP_{Estimate} = TRP_{Reference}$ as N and M approach ∞.

There is a trade-off between the accuracy of the $TRP_{Estimate}$ and the total number of sampling points. A large number of sampling points leads to long measurement time. Thus, it is important to achieve short measurement time and fulfilling the minimum *TRP summation error*. Clause 6.3.4.2 (i.e. reference angular step criteria) outlines the criteria for determining the minimum number of sampling points to characterize. Other means for set the number of sampling points are not precluded.

One observation is that the equal angle grid points are not uniformly distributed on the sphere surface, and many are clustered towards the poles, as shown in figure 6.3.4.1-1.

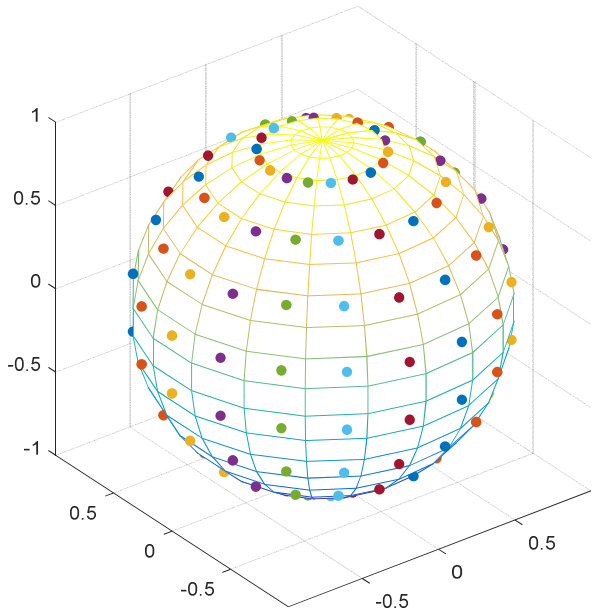

Figure 6.3.4.1-1: Spherical equal angle sampling grid

6.3.4.2 Reference angular step criteria

For each frequency, the reference angular steps $\Delta\phi_{ref}$ and $\Delta\theta_{ref}$, in degrees, are calculated as in [9]:

$$\Delta\phi_{ref} = min(\frac{180^{\circ}}{\pi}\frac{\lambda}{D_{cyl}}, 15^{\circ})$$

$$\Delta\theta_{ref} = min(\frac{180^{\circ}}{\pi}\frac{\lambda}{D}, 15^{\circ}),$$

where D and D_{cyl} are defined further down in this clause. This implies a maximum angular step of 15 °. The upper limit for these reference angular steps of 15 ° ensures a low *TRP summation error* when λ is large compared to the BS dimensions.

The reference steps can be derived as follows. Consider two short vertical current elements separated a distance L along the z-axis. The EIRP pattern of this source is

$$\mathrm{EIRP}(\theta, \phi) = \sin^2\theta \cos^2\left(k\cos\theta\,\frac{L}{2}\right)$$

Here, the element factor is $\sin^2\theta$ and $\cos^2(k\cos\theta\ L/2)$ is the *array factor* contribution. To calculate the TRP value correctly, an angular sampling of $\Delta\theta_{\mathrm{ref}} = \lambda/L$ is required, see figure 6.3.4.2-1. But a single ϕ is enough since the pattern is ϕ-independent (omni-directional).

Any current flowing on a line between the points $(x, y, z) = (0,0,\pm L/2)$ will correspond to source separations less than or equal to L. Hence its EIRP pattern will correspond to the same angular resolution, i.e., the average value will be correctly predicted using the same angular step.

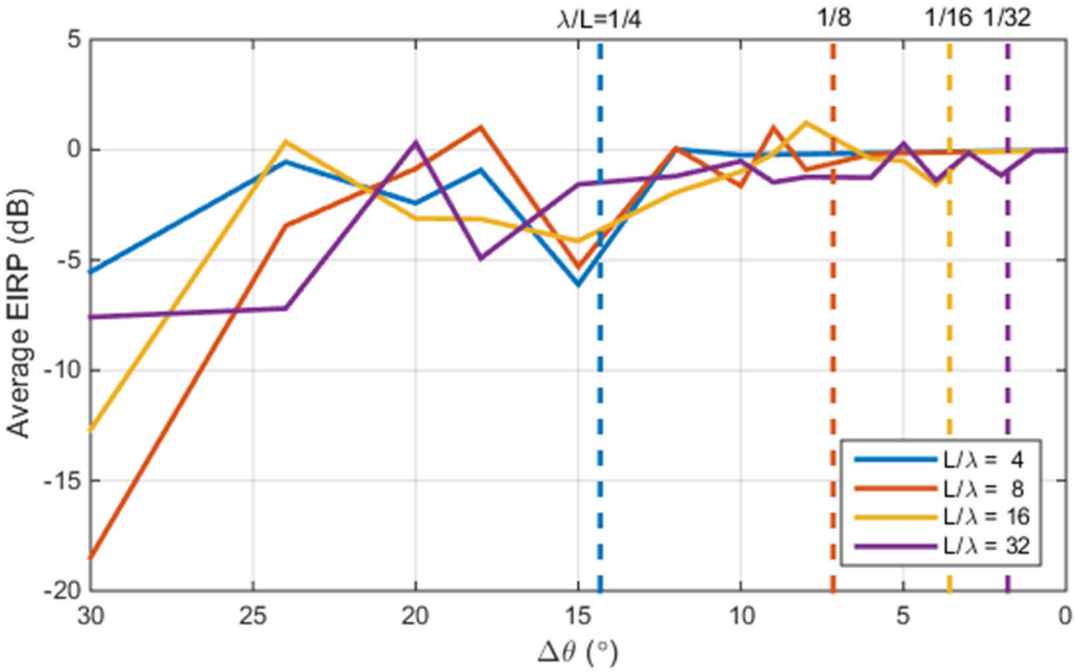

Figure 6.3.4.2-1: The average EIRP when using different angular steps $\Delta\theta$ and the EIRP pattern of two short vertical current elements separated a distance L=4, 8, 12, 16, and 32 wavelengths, respectively. The dashed lines depict the reference angular step $\frac{\lambda}{L} = \frac{1}{4}, \frac{1}{8}, \frac{1}{12}, \frac{1}{16}, \frac{1}{32}$ radians for the used source separations

To proceed to more general sources two observations are useful:

1) A rotation of a source will not change the required θ resolution, but the ϕ resolution must be set equal to the θ resolution.

2) If the source distribution is stretched along the z-direction, the ϕ-resolution will not change.

Based on these two observations and the angular resolution of the line source of length L, the following can be deduced.

1) If the line source is tilted 90 ° down to the xy-plane, and then arbitrarily rotated around the *z*-axis, a flat disc of diameter L is generated. Based on observation 1, the angular resolution is $\Delta\theta_{\text{ref}} = \Delta\phi_{\text{ref}} = \lambda/L$.

2) If the disc is stretched a distance h along the z-axis (current elements are translated parallel to the z-axis), then the $\Delta\phi_{\text{ref}} = \lambda/L$ is unchanged, whereas the vertical angular resolution increases to $\Delta\theta_{\text{ref}} = \lambda/\sqrt{L^2 + h^2}$ to encompass the largest possible source separation within the cylinder.

The final shape of the source enclosure is hence a cylinder of diameter L and height h, and the angular steps required to get an accurate EIRP average (TRP value) are

$$\Delta\theta_{\text{ref}} = \frac{\lambda}{\sqrt{L^2 + h^2}} = \frac{\lambda}{D}, \ \Delta\phi_{\text{ref}} = \frac{\lambda}{L} = \frac{\lambda}{D_{\text{cyl}}}.$$

Here, DD is the diameter of the source enclosure, i.e., the diameter of the smallest sphere enclosing all radiation sources, and D_{cyl} is the diameter of the smallest *z*-directed circular cylinder that encloses all sources.

Other methods for determining the reference angular steps are not precluded.

NOTE: When sampling with the reference angular step, fine details of the *radiation pattern* are maybe not captured but the estimated TRP value is still accurate.

The spherical and cylindrical diameters are calculated as:

$$D = \sqrt{d^2 + w^2 + h^2}$$

$$D_{\text{cyl}} = \sqrt{d^2 + w^2}$$

The radiation source can be the *antenna array* or even the whole BS, depending on the emissions to consider. This is further explained in clause 6.3.2.

Some basic definitions and relations are given here for readability.

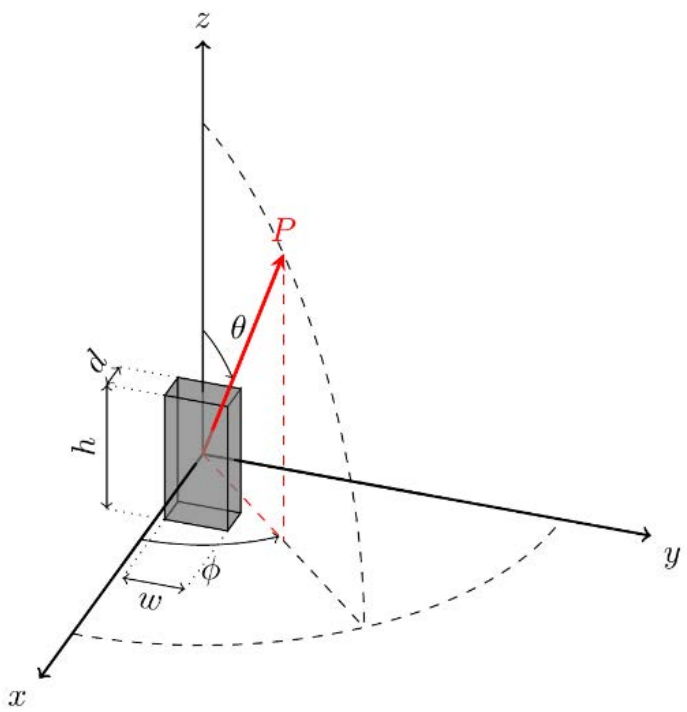

Figure 6.3.4.2-2: The dimensions of a radiation source are depth (d), width (w) and height (h)

Optionally, for the specific case of a Uniform Linear Array (ULA) system, the array spatial pattern could be defined as in the following equation.

$$G_0(\theta) = \left| \frac{\sin(m\beta/2)}{m\sin(\beta/2)} \right|$$

Where spatial frequency β is defined as following:

$$\beta = (2\pi d \sin(\theta))/\lambda$$

Similar to Nyquist sampling in the time domain signal, the Rayleigh resolution for spatial domain signal to avoid the aliasing can be derived as:

$$\sin(m\beta/2) = 0 \;\rangle\; m\beta/2 = m \cdot 2\pi d \sin(\theta)/2\lambda = \pi$$

$$\Delta\theta = \arcsin\left(\frac{\lambda}{md}\right) = \frac{180^\circ}{\pi}\arcsin\left(\frac{\lambda}{md}\right)$$

where *d* is the separation distance between antenna elements and *m* is the number of antenna elements. If BS is mounted along the y-z plane as shown in figure 6.3.4.2-3, based on the above considerations on the Rayleigh resolution for spatial domain signal, then subinterval in the φ and θ in degrees angle is calculated as:

$$\Delta\theta_{ref} = \min\left(\frac{180^\circ}{\pi}\arcsin\frac{\lambda}{D_Z}, 15^\circ\right)$$

$$\Delta\phi_{ref} = \min\left(\frac{180^\circ}{\pi}\arcsin\frac{\lambda}{D_Y}, 15^\circ\right)$$

Where D_y is length of radiating part of the BS along y-axis, D_z is length of radiated part of the BS along the z-axis and λ is wavelength for the measured frequency. Arcsine is in radians.

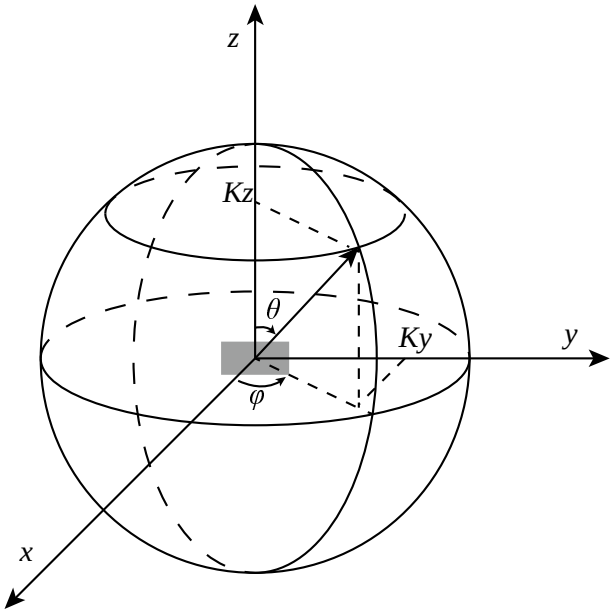

Figure 6.3.4.2-3: Spherical coordinate for OTA conformance testing of BS

In the NR coexistence study, it was assumed that antenna configuration for wide area BS is 8x16 supporting two orthogonal polarizations. If BS mounted along y/z plane with antenna configuration 16x8 where 16 columns are assumed along the y-axis and 8 rows are assumed along the z-axis. Antenna elements are uniformly distributed with separation distance λ/2, therefore aperture size $D_y \approx 8\lambda$ and $D_z \approx 4\lambda$. The uniform sampling in the spherical coordinate for this approach is demonstrated in the figure 6.3.4.2-4.

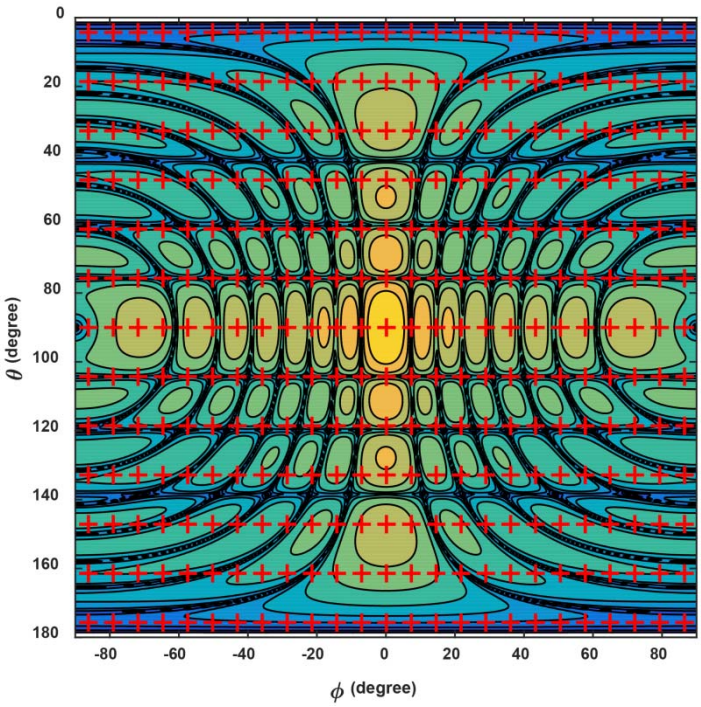

Figure 6.3.4.2-4: Uniform sampling in the spherical coordinate, red crosses denotes the sampling points

For a wanted signal, the reference angular steps are approximately equal to the beamwidth (in degrees) of the main beam.

$$\Delta\phi_{ref} \cong BeW_{\phi} \cong \frac{FNBW_{\phi}}{2}$$

$$\Delta\theta_{ref} \cong BeW_{\theta} \cong \frac{FNBW_{\theta}}{2}$$

where BeW_{ϕ} and BeW_{θ} are the *beamwidth* of the wanted signal in the ϕ-axis and θ-axis, respectively; $FNBW_{\phi}$ and $FNBW_{\theta}$ are the first null beamwidth of the wanted signal in the ϕ-axis and θ-axis, respectively.

Using *beamwidth* of the wanted signal, the reference angular steps for each frequency within the *downlink operating band* including Δf_{OBUE} can be expressed as follows:

$$\Delta\phi_{ref} = \frac{\lambda}{\lambda_0} BeW_{\phi} = \frac{\lambda}{\lambda_0} \frac{FNBW_{\phi}}{2}$$

$$\Delta\theta_{ref} = \frac{\lambda}{\lambda_0} BeW_{\theta} = \frac{\lambda}{\lambda_0} \frac{FNBW_{\theta}}{2}$$

where λ_o is the wavelength of the wanted signal, and BeW_{ϕ} and BeW_{θ} are the *beamwidth* in the ϕ-axis and θ-axis, respectively.

For the OTA BS radiated transmit power requirement, beamwidths at five different directions is declared by manufacturers. The declared beamwidth may be used to set BeW_{ϕ} and BeW_{θ} in the above equations provided the same beam is applied to test in-band *TRP requirements*. If the The numerical singularity at of a test beam is not declared, then the beamwidth can be obtained through measurements following the same procedure as the BS radiated transmit power requirement prior to TRP measurements.

In addition, the beamwidth of the wanted signal can be used to determine the physical dimensions of a radiation source as follows:

$$D_{cyl} = \frac{\lambda_0}{BeW_{\phi}}$$

$$D = \frac{\lambda_0}{BeW_{\theta}}$$

and for the ULA case:

$$D_y = \frac{\lambda_0}{\sin(BeW_{\phi})}$$

$$D_z = \frac{\lambda_0}{BeW_{\theta}}$$

6.3.4.3 Spherical equal area grids

With the spherical equal area sampling grid, the spherical surface is partitioned into N equal area regions. Let n be the index for the nth region and there is one point (θ_n, ϕ_n) located in the centre of each region. The definite integral for $TRP_{Reference}$ can be approximated as:

$$TRP_{Estimate} = \frac{1}{N}\sum_{n=1}^{N} EIRP(\theta_n, \phi_n)$$

The total number angular sampling points is N. Unlike the spherical equal angle grid, the $TRP_{Estimate}$ equation is not weighted by $sin\ \theta$. As shown in figure 6.3.4.3-1, the equal area grid points are distributed uniformly on the sphere but the pattern of θ and ϕ angles is irregular.

One possible way to estimate N is as follows:

$$N \geq \frac{4\pi}{\Delta\theta_{ref}\Delta\phi_{ref}}$$

where $\Delta\theta_{ref}$ and $\Delta\phi_{ref}$ are defined in clause 6.3.4.2. Other methods are possible and not precluded.

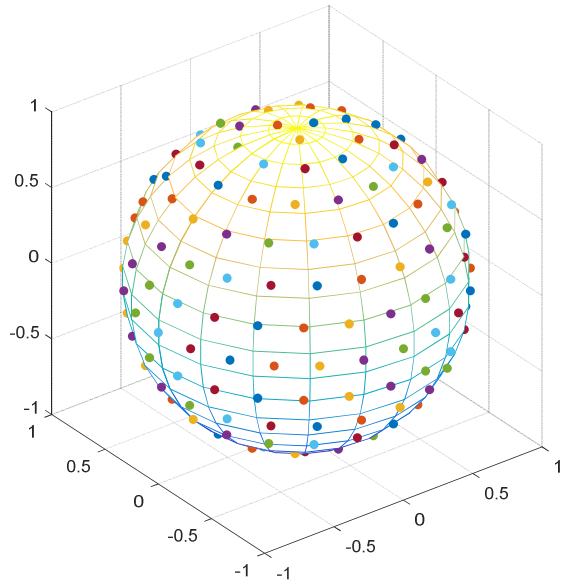

Figure 6.3.4.3-1: Spherical equal area sampling grid

6.3.4.4 Spherical Fibonacci grids

The Fibonacci grid points are arranged along a generative spiral on the spherical surface. Similar to the equal area sampling grid, the Fibonacci grid generates points that are uniformly spaced in an isotropic way. Assume there are I points in the Fibonacci sampling grid, then the definite integral for $TRP_{Reference}$ can be approximated as:

$$TRP_{Estimate} = \frac{1}{I}\sum_{i=0}^{I-1} EIRP(\theta_i, \phi_i)$$

where $i = 0 .. I - 1$

$\theta_i = \cos^{-1}\left(1 - \frac{2i+1}{I}\right)$ and

$\phi_i = \frac{2\pi i}{\Psi}$,

where $\Psi = \frac{1+\sqrt{5}}{2}$

The total number of angular sampling points is I, which can be estimated in a similar manner as in clause 6.3.4.3. Like the spherical equal area grid, the $TRP_{Estimate}$ equation is not weighted by $sin\ \theta$.

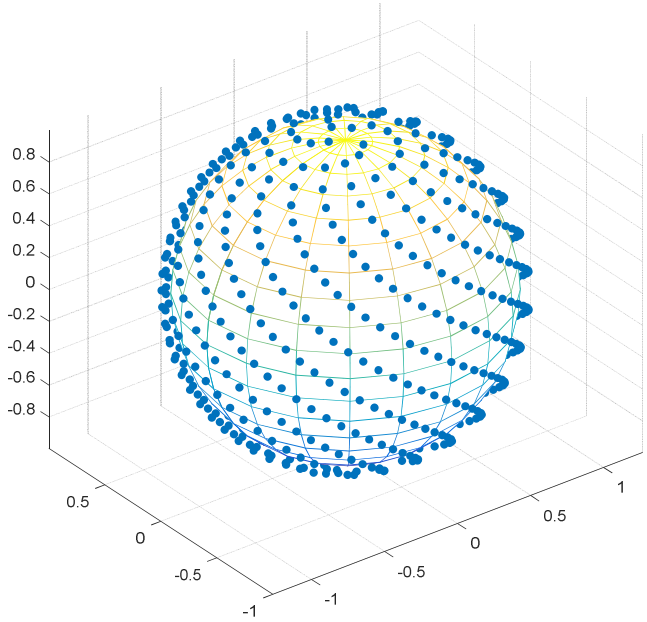

Figure 6.3.4.4-1: Spherical Fibonacci sampling grid

6.3.4.5 Orthogonal cuts grids

Compared to the TX spurious emissions the OBUE emissions and ACLR are likely to experience the similar beamforming pattern as for the wanted signal. Due to this reason, it is easily predictable where the maximum of the emissions is going to be, hence the possibility to enhance the measurement method to achieve better accuracy. Here we choose to apply the pattern multiplication method [10].

In this method, at least two cuts (default) shall be used, an optional third cut can be added if needed. The alignment of the cuts must be along the symmetry planes of the *antenna array*. Note that theta reference steps apply to the vertical cuts and phi reference steps to the horizontal cuts.

The first mandatory cut is a horizontal cut passing through the peak direction of the main beam.

The second mandatory is a vertical cut passing through the peak direction of the main beam.

Using the data from these two mandatory cuts, a conditional pattern multiplication can be used.

The third optional cut is a vertical cut orthogonal to the first and the second cut.

Once the number and the orientation of the cuts are decided, the total EIRP is measured on the orthogonal cuts and the TRP is then calculated as follows: First the contributions from each cut is calculated as:

$$EIRP_{av,cut-n} = \frac{1}{P}\sum_{j=1}^{P} EIRP(j)$$

where P is the number of sampling points. The final contribution for all cuts is calculated as:

$$TRP_{Estimate} = \frac{1}{N}\sum_{n=1}^{N} EIRP_{av,cut-n}$$

where N is the number of cuts. Note that when orthogonal cuts are measured, the intersection points are measured multiple times and the repeated values can be removed from the samples before averaging.

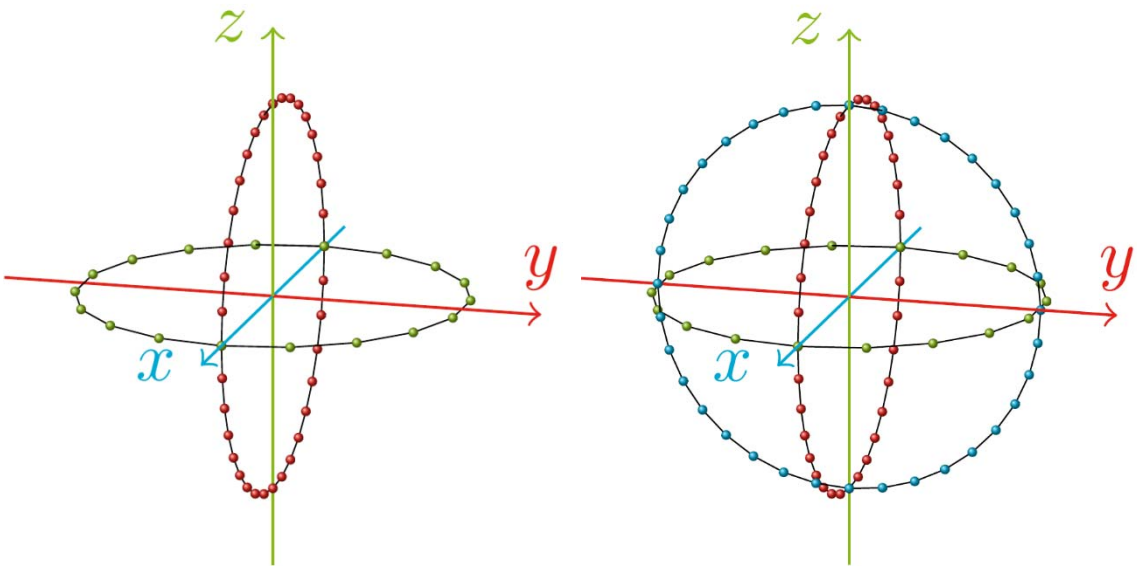

Figure 6.3.4.5-1: Example of orthogonal cuts geometry when the main lobe points along the x-axis. Two mandatory cuts grid (left) and the optional added third cut (right). The first two cuts are generated by rotating the BS around its z-axis and y-axis, respectively, and the optional third cut is generated by rotating the BS around its x-axis

Two cuts cut data gives a conservative TRP estimate (an overestimation of the real TRP). Through pattern multiplication a less conservative estimate is obtained, based on the calculation of the antenna *array factor* as a product of two terms, corresponding to the two cuts.

The following conditions for being able to apply pattern multiplication method are mandatory:

i. The vertical cut (and the main beam) is in the xz-plane

ii. The frequency of the emission is within the downlink operating band.

iii. The bandwidth of the emission is the same as the bandwidth of the in-band modulated signal

iv. The emission appears/disappears when the TX power is turned on/off.

v. The *antenna arrays* of the BS

   1. Have rectangular grids of antenna element positions

   2. Have symmetry planes that are vertical and horizontal.

   3. Have parallel antenna planes

The *antenna array* is here assumed to be placed in the yz-plane. The pattern multiplication is performed in uv-coordinates and the data in the two cuts are denoted $\mathrm{EIRP}_{\mathrm{cut1}}(\phi)$ at $\theta = \theta_H$ and a vertical cut with data $\mathrm{EIRP}_{\mathrm{cut2}}(\theta)$ at $\phi = 0$. The data is split in two parts corresponding to the forward and backward hemisphere. The uv-coordinates are the projections of the angular directions onto the antenna plane, here the yz-plane. Using the spherical coordinates as depicted in figure 6.3.4.2-2 the u and v coordinates are defined as:

$$\begin{cases} u = \sin\theta \sin\phi \\ v = \cos\theta \end{cases}$$

Note that only the data on the coordinate axes are measured, and hence only the data $\mathrm{EIRPcut1}(u)$ $\mathrm{EIPR}_{\mathrm{cut1}}(u)$ for $v_H = \cos\theta_H$ (the horizontal cut) and $\mathrm{EIRP}_{\mathrm{cut2}}(v)$ for $u = 0$ (the vertical cut) are known. Moreover, only the points in the circular disc $u^2 + v^2 \leq 1$, a.k.a. the visible region, contribute to the TRP.

The pattern multiplication is used to calculate power density values outside the two cardinal cuts as:

$$\mathrm{EIRP}(u, v) = \frac{EIRP_{cut1}(u)EIRP_{cut2}(v)}{\mathrm{EIRP}(0, v_H)}$$

In Figure 6.3.4.5-2, the case where $v_H = 0$ is illustrated.

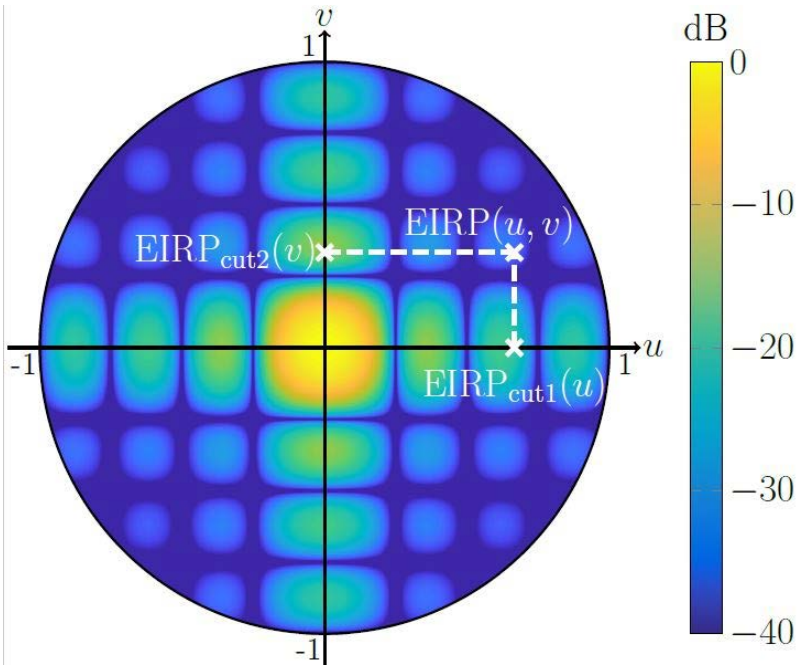

Figure 6.3.4.5-2: Example of pattern multiplication

The pattern multiplication is applied separately for the forward (fwd) and backward (bwd) hemisphere. The TRP is then calculated as

$$\mathrm{TRP} = \frac{1}{4\pi}\left[\iint_{\mathrm{fwd}} EIRP_{fwd}(u,v)\frac{\mathrm{d}u\mathrm{d}v}{\sqrt{1-u^2-v^2}} + \iint_{\mathrm{bwd}} EIRP_{bwd}(u,v)\frac{\mathrm{d}u\mathrm{d}v}{\sqrt{1-u^2-v^2}}\right]$$

NOTE: The numerical singularity at $u^2 + v^2 = 1$ must be treated with care, e.g. by changing the coordinate system to polar as in [10].

6.3.4.6 Wave vector space sampling grid

Similar as Rayleigh sampling approach, BS is placed on the yz plane in the spherical coordinate and normal vector of BS is pointing along the x-axis as shown in figure 6.3.4.2-2. The angle φ and θ represent azimuth and elevation respectively, *u* and *v* represent the projection of normalized wave vector on y-axis and z-axis.

According to the relationship between the normalized wave vector and spherical coordinate, the wave vector can be represented as following:

$$u = \sin(\theta)\sin(\phi), v = \cos(\theta)$$

TRP is defined in the spherical coordinate as following:

$$\mathrm{TRP} = \frac{1}{4\pi}\iint \mathrm{EIRP}(\theta,\varphi)\sin\theta d\theta d\varphi$$

As TRP is defined in the wave vector coordinate, therefore TRP definition should be revised accordingly in the corresponding coordinate. For the TRP definition in normalized wave vector space, according to the 2D Jacobian transformation, the above equation could be adjusted as following, namely:

$$\mathrm{d}u\mathrm{d}v = \left|\frac{\partial(u,v)}{\partial(\theta,\phi)}\right|\mathrm{d}\theta\mathrm{d}\phi = \sin^2\theta|\cos\phi|\mathrm{d}\theta\mathrm{d}\phi$$

Based on the above two equations, then we could get

$$\mathrm{TRP} = \frac{1}{4\pi}\iint_{\mathrm{fwd}}\frac{\mathrm{EIRP}(\theta,\phi)}{\sin\theta|\cos\phi|}\mathrm{d}u\mathrm{d}v + \frac{1}{4\pi}\iint_{\mathrm{bwd}}\frac{\mathrm{EIRP}(\theta,\phi)}{\sin\theta|\cos\phi|}\mathrm{d}u\mathrm{d}v$$

where relationship between (θ,φ) and (u,v)is demonstrated in the equation before. Similar as discrete sampling process, the above equation is approximated in the far-field region as the sum of the total EIRP at a number of discrete directions as follows:

$$\mathrm{TRP} = \frac{\Delta u_{\mathrm{grid}} \Delta v_{\mathrm{grid}}}{4\pi} \left(\sum_{\substack{u^2+v^2<1 \\ \cos\phi>0}} \frac{\mathrm{EIRP}(\theta_n, \phi_{m,n})}{\sin\theta_n |\cos\phi_{m,n}|} + \sum_{\substack{u^2+v^2<1 \\ \cos\phi<0}} \frac{\mathrm{EIRP}(\theta_n, \phi_{m,n})}{\sin\theta_n |\cos\phi_{m,n}|} \right)$$

The above considerations could be applied for both polarization.

Uniform sampling in the wave vector coordinate as shown in figure 6.3.4.6-1:

- Rayleigh resolution in y-axis: $\Delta u_{\mathrm{grid}} = \frac{\lambda}{D_y}$
- Rayleigh resolution in z-axis: $\Delta v_{\mathrm{grid}} = \frac{\lambda}{D_z}$

Where D_y is length of radiating parts of BS along y-axis, D_z is length of radiating parts of BS along the z-axis.

Based on the uniform sampling grid on the yz plane, we could get the sampling point (u_m , v_n). In addition, according to the transformation between (u_m, v_n) and (φ, θ), then azimuth and elevation ($\varphi_{m,n}$, θ_n) in the spherical coordinate could be derived correspondingly as shown in figure 6.3.4.6-2. Based on the ($\varphi_{m,n}$, θ_n) in the spherical coordinate, EIRP on the spherical coordinate could be measured.

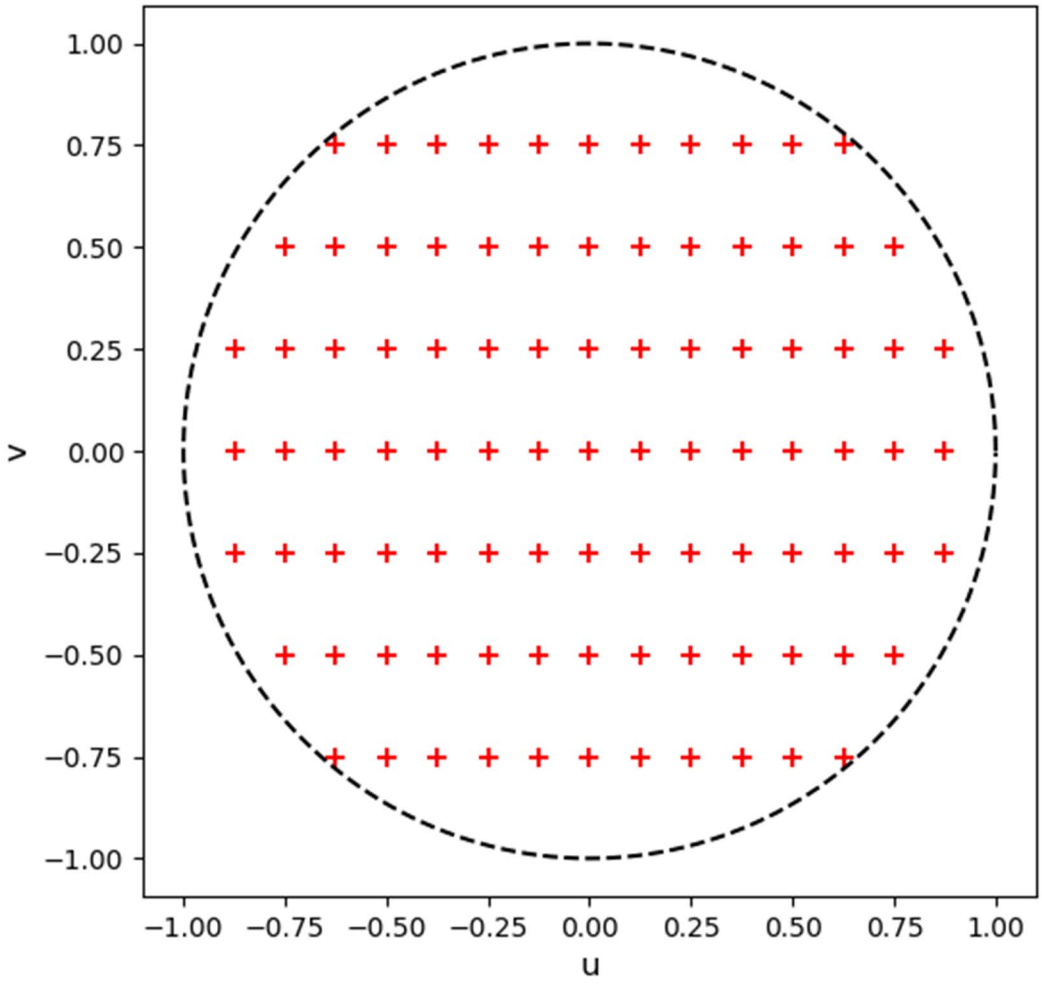

Figure 6.3.4.6-1: Sampling grid in the wave vector space

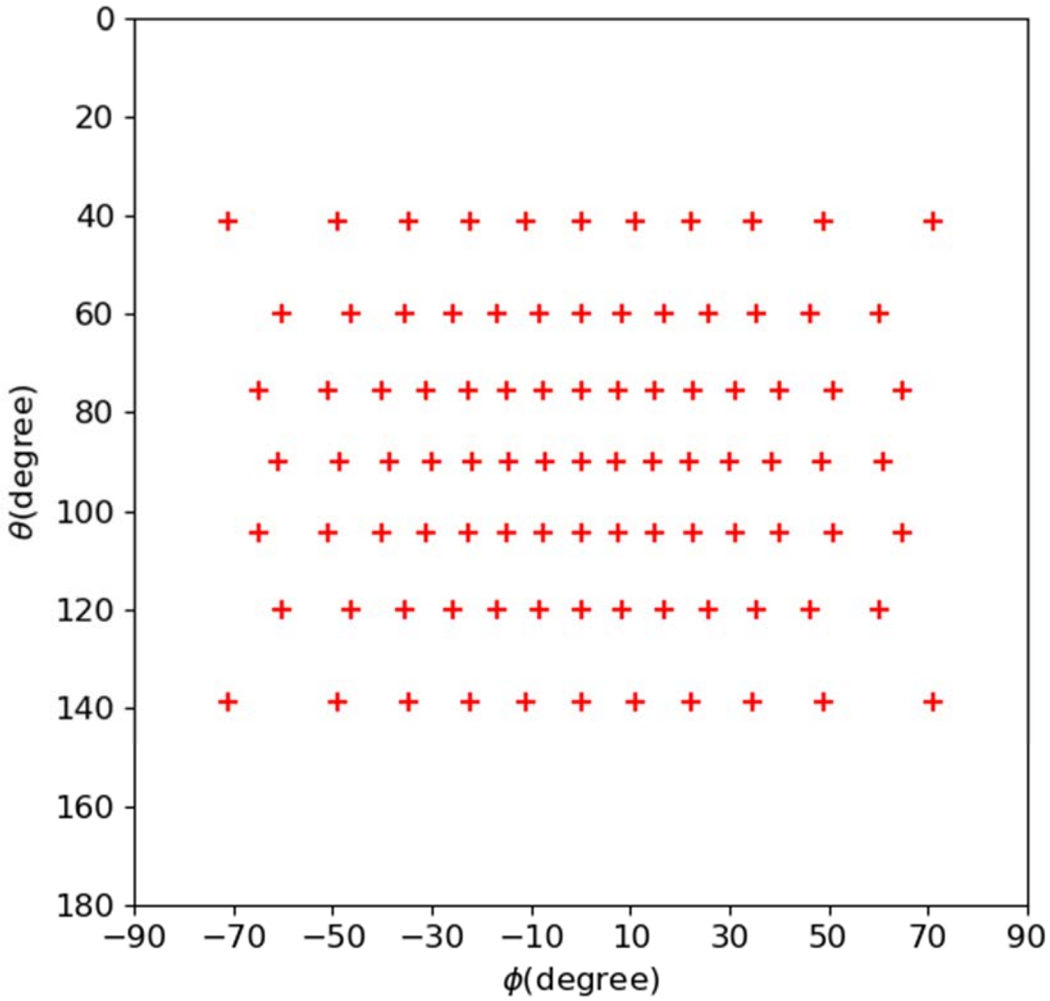

Figure 6.3.4.6-2: Sampling grid in the spherical coordinate

6.3.5 Aspects related to measurement of OTA unwanted emission

6.3.5.1 Test range

Test of OTA unwanted emission required an OTA test environment, capable of measuring TRP emission under the condition that the test object is radiating the wanted signal at full power. To handle high RF power from the test object required careful planning of the setup (e.g. test personal and test equipment cannot be placed inside the test chamber during the test). To avoid measurement chamber influence and external interferer on the test result, use of a shielded anechoic chamber is preferable. A positioner is used to move the test object according to selected measurement grid for a proper TRP measurement. The emission is measured at the output RF port of the measurement antenna placed at a suitable test distance. In figure 6.3.5.1-1, a principle test environment suitable for OTA unwanted emission is depicted.

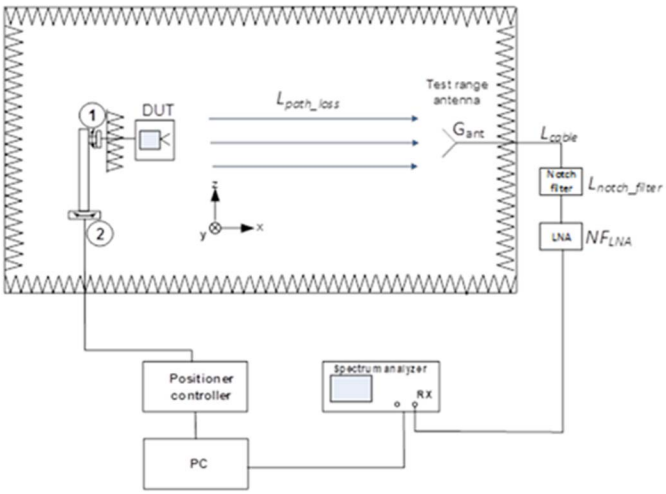

Figure 6.3.5.1-1: Principle test environment

The test environment may differ between OTA unwanted emission requirements; OTA ACLR, OTA OBUE and OTA spurious emission. For OTA spurious emission, a test environment similar to the one used for EMC radiated emission or a Shielded Indoor Anechoic Chamber (IAC) can be used. For OTA unwanted emission requirements defined within the in-band region other test environments could be considered e.g. CATR or IAC.

A band stop filter is needed to protect the measurement receiver from the wanted signal, achieving dynamic range for the emission to be measured with acceptable measurement uncertainty.

6.3.5.2 Measurement distance

The measurement distance is the distance between the test object and the measurement antenna (or probe antenna). The measurement distance is usually determined by the signal-to-noise ratio (SNR) required for the measurement receiver to detect the emission level with acceptable measurement uncertainty. Unlike, EIRP, *total radiated power* (TRP) is not exclusively a far-field parameter. TRP is defined as the *total radiated power* radiated by an object, regardless to the distance. Since emission power levels tends to be low, it is essential to conserve the path-loss in the test setup, by minimizing the measurement distance. Another aspect is the for the lower limit (i.e. 30 MHz) the far-field criteria would result in unpractical measurement distances for OTA testing. Further guidance on near-field testing can be found in annex F.

6.3.5.3 Sampling grid selection

A dense full-sphere grid, i.e. using reference steps, will result in a very large number of measurement points to extract TRP per frequency, while a sparse grid requires a few measurements. The selection of grid and corresponding sampling resolution determines the measurement uncertainty error contribution related to sampling the radiating power over the sphere. Determining proper sampling grids for emission, assumptions of the spatial distribution of emission should be considered. If it can be established that the emission is radiating in all directions, the sample grid resolution can be significantly reduced.

The ability of direct emission in certain direction is set by the physical size of BS, number of radiating sources and correlation properties. For low frequencies, where $D << \lambda$, it is reasonable to believe that the radiated emission will be omni-directional, while for the case where $D >> \lambda$, there is a potential risk that emission leaking through the encapsulation or the antenna aperture can be directed in a certain direction. Therefore, the process to determine the sampling grid and corresponding resolution needs to include the frequency as one parameter. Consequently, a concept with a fixed sampling grid over the whole spurious frequency domain is not suitable to balance measurement uncertainty with test time.

6.3.6 TRP summation error

In practice, discrete samples of EIRP or power density are measured at different directions (θ, ϕ) over the entire sphere, which are used to numerically approximate the surface $TRP_{Reference}$ integral. The obtained value, $TRP_{Estimate}$, is an approximation of $TRP_{Reference}$ and the difference between them is defined as the *TRP summation error* (SE) which is

$$SE = | TRP_{Estimate} - TRP_{reference} | \text{ (in dB)}$$

The SE is the error caused by the numerical integration of measured values on the grid to obtain $TRP_{Estimate}$, given that the number of test points correspond to the reference angular steps, which are in turn dependent on antenna size and frequency, as described in clause 6.3.4. A reasonable trade-off between accuracy and sampling time is achieved when the SE = 0.75 dB.

6.4 Co-location measurements

6.4.1 General

Co-location measurements are required for the OTA co-location requirements which are based on assuming the BS is co-located with another BS of the same base station class. They ensure that both co-located systems can operate with minimal degradation to each other.

Co-location requirements are specified as power levels into or out of the conducted interface of the *co-location reference antenna*. For conformance testing the requirements are translated to the input or output of a *co-location test antenna* (CLTA).

CLTA is a practical passive antenna that is used for conformance testing of the co-location requirements and is based on the definition of the *co-location reference antenna*. Basic principle of the CLTA are outlines in clause 6.4.2. For more details on the *co-location test antenna* characteristics, refer to TS 37.145-2 [4] clause 4.15.2.2, or TS 38.141-2 [6] clause 4.12.2.2. The CLTA is suitable for testing BS implemented with a planar *antenna array*.

The alignment between the BS under test and the *co-location test antenna* is depicted in figure 6.4.1-1. For more details on the *co-location test antenna* alignment and test arrangement, refer to TS 37.145-2 [4] clause 4.15.2.3, or TS 38.141-2 [6] clause 4.12.2.3. The same physical alignment applies to in-band and out-of-band co-location requirements.

Co-location requirements are not applicable to FR2.

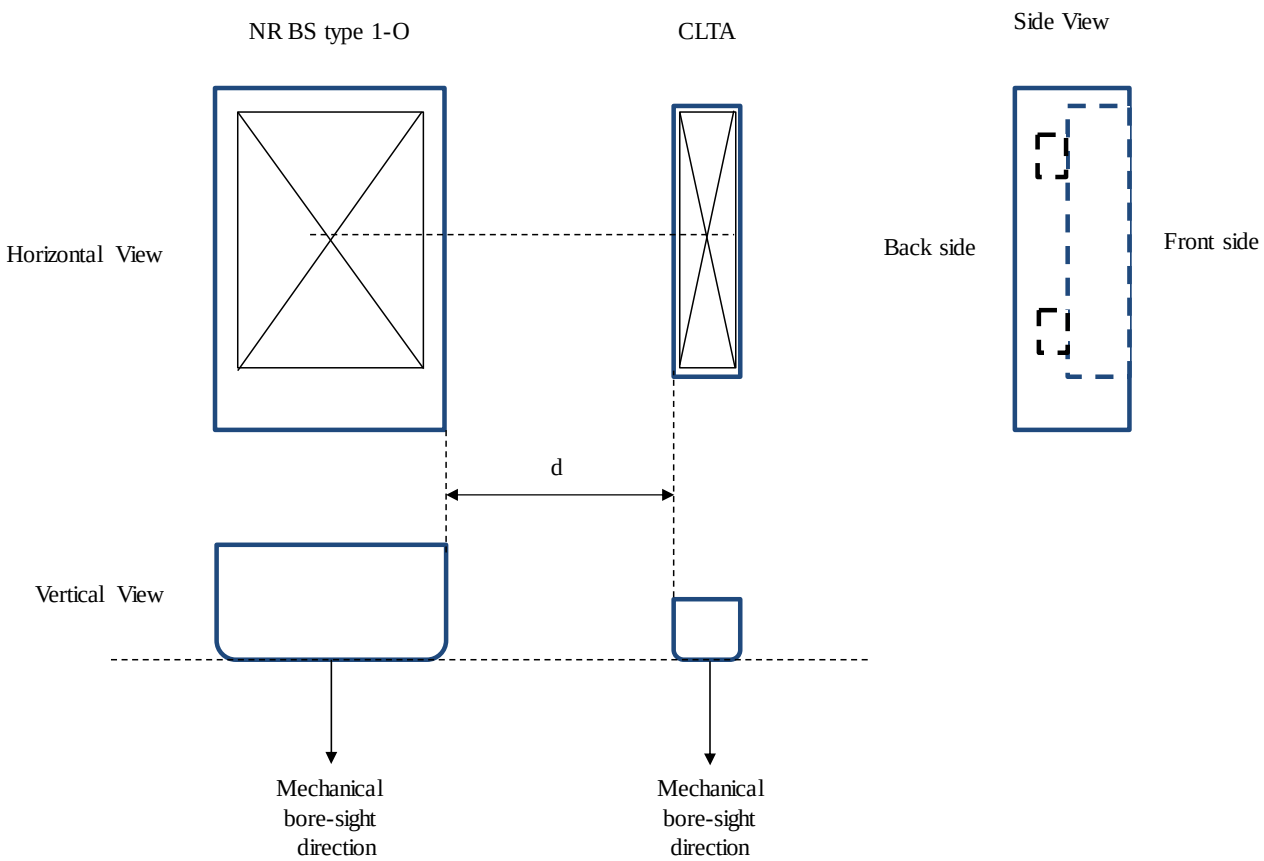

Figure 6.4.1-1: Alignment of BS and CLTA

6.4.2 Co-location test antenna

The *co-location test antenna* is a practical passive antenna based on the definition of the *co-location reference antenna*, and it is used for conformance testing of the co-location requirements. Thus the CLTA should be within a certain tolerance of the co-location reference antenna definition, so that commonly available passive BS antennas can be used to test the co-location requirements without having to use a large number of test antennas and without having to design specialized *co-location test antennas*.

For example, where the co-location reference antenna definition specifies that the *co-location reference antenna*, should be a single column passive antenna which has the same vertical radiating dimension (h) as the composite antenna of BS, this would be very restrictive when selecting a test antenna. Hence the CLTA should be within a certain tolerance for the vertical radiating dimension (h) such that a suitable practical BS antenna can be found for each BS.

The CLTA is hence defined as follows:

> The CLTA is a single column passive antenna which has a vertical radiating dimension (h) which is equal to the vertical radiating dimension of the BS composite antenna ±30 %.
>
> For in-band requirements, the CLTA supports the same frequency range and polarizations as the BS composite antenna.
>
> For out-of-band co-location requirements, the half power vertical beamwidth of the CLTA equals the narrowest declared vertical beamwidth ±3 °.
>
> The polarization should match the in-band CLTA polarization
>
> The CLTA has a horizontal half-power beamwidth of 65 ° ± 10 °.
>
> The front faces of the BS and the CLTA need to be aligned in a common plane perpendicular to the mechanical bore-sight direction.
>
> The centre of the vertical radiating regions of the CLTA and the BS composite antenna need to be aligned.

6.4.3 Standard test antenna

Co-location requirements may also be tested with a standardised test antenna such as a dipole. This has a number of advantages:

- Standard test antennas are easily available and easier to specify.
  - Repeatability between different conformance testing runs will be greater.
- Using standard test antennas, fewer antennas will be required for conformance testing.
- A standard test antenna can have higher gain in the direction of the BS than a CLTA, so that signal levels can be higher relative to the noise floor in emission measurements and lower test levels can be used in interference measurements.

In order to test with a standard test antenna, the translation between measured power levels in the standard test antenna and the *co-location reference antenna* must be shown. The method for translating the power levels in the *co-location reference antenna* to the standard test antenna and vice versa is not covered by the present release of this technical report.

6.5 Requirements classification

Based on the above spatial definitions, in table 6.5-1 captures classification of the radiated TX requirements and table 6.5-2 captures classification of the radiated RX requirements.

Table 6.5-1: Classification of radiated TX requirements

TX requirement	Description	Classification
Radiated transmit power	The minimum requirements for radiated transmit power, are placed on one or more manufacturer declared beams over a declared OTA peak direction set. OTA requirements for BS output power are defined for directional EIRP requirements as radiated transmit power requirements. This requirement originates from the Rel-13 AAS BS requirement for the EIRP accuracy.	Directional
OTA BS output power	TRP metric is used for BS output power limit requirement.	TRP
OTA output power dynamics	OTA output power dynamics consists of the Total power dynamic range, as well as the RE power control dynamic range requirements. For E-UTRA specification, the RE power control dynamic range requirement has no specific test and is tested together with the EVM. Furthermore, verification of the output power dynamics is not impacted by the spatial aspects around the BS. Therefore, the OTA output power dynamics requirements are considered as directional requirements.	Directional
OTA transmit OFF power	The OTA transmit OFF power is a co-location requirement in FR1, defined at the *co-location reference antenna* conductive output side, subject to scaling. For FR2, it is defined as *TRP requirement*.	FR1: Co-location FR2: TRP
OTA transient period	Same as OTA transmit OFF power, the OTA transient period is a co-location requirement in FR1, defined at the *co-location reference antenna* conductive output side, subject to scaling. For FR2, it is defined as directional requirement.	FR1: Co-location FR2: directional
OTA transmitted signal quality	EVM: The range of directions where the EVM requirement must be met is declared by the manufacturer as *OTA coverage range*, while the requirement itself is considered directional. Frequency error: The frequency error is coherent and will have a 'flat' response in the spatial domain, i.e. OTA frequency error will not depend on the selection of the measurement point within beam's compliance directions set. Therefore, single directional requirement can be applied. TAE: In terms of testing effort it is beneficial, to coordinate testing of OTA TAE with testing of other transmitter parameters such as OTA frequency error and radiated transmit power.	Directional
OTA occupied bandwidth	For occupied bandwidth, the beam characteristics are not important. The requirement should however cover the fact that all transmitter is active and the system is operating at the maximum declared rated *total radiated power*. Occupied bandwidth is specified as a directional requirement valid over the *OTA coverage range*.	Directional
OTA ACLR	ACLR requirement is the ratio of two TRP measures: the total radiated filtered mean power centred on the assigned channel frequency to the total radiated filtered mean power centred on an adjacent channel frequency.	TRP
OTA operating band unwanted emission	The OBUE unwanted emissions requirement in the OTA domain must capture all emissions around the BS by application of the TRP metric.	TRP
OTA transmitter spurious emission	Similar to other Unwanted emissions requirements, the metric used to capture transmitter spurious emissions OTA is TRP.	TRP except for co-location requirements applicable in FR1
OTA transmitter intermodulation	OTA transmitter intermodulation requirement relies on Unwanted emission requirements (i.e. operating band unwanted emission, transmitter spurious emission, and ACLR; all defined as TRP) in the presence of a wanted signal and an interfering signal. No requirement for FR2 is defined.	Co-location

Directional requirements are to be met over one of two defined directions sets, with each direction set being declared:

- The *OTA coverage range*: range of directions over which *directional requirements* associated with BS-UE communication are intended such as modulation quality, TAE and frequency error. It can be regarded as the range of directions which define the cell coverage. There is only one *OTA coverage range* per BS.

- The *OTA peak directions set*: intended for *directional requirements* which are intended for the centre of the beam for example EIRP accuracy. The *OTA peak directions set* must always be within the *OTA coverage range*.

There may be more than one *OTA peak directions set* declared, the declarations cover the range of directions which a beam may be steered. As the BS may generate more than one type of beam with different beam widths and different steering capabilities the declaration allows for multiple *OTA peak direction sets* to be declared. The minimum set of declarations covers the beams with the narrowest and the widest beam widths.

Table 6.5-2: Classification of radiated Rx requirements

Rx requirement	Description and discussion	Classification
OTA sensitivity	Based on the Rel-13 EIS requirement declaration over the OSDD, the OTA sensitivity is directional requirement by definition. Conformance testing for OTA sensitivity is performed for the five directions. This requirement is not applicable for *BS type 2-O*.	Directional
OTA reference sensitivity level	Conformance testing for OTA reference sensitivity is performed for five directions declared by the manufacturer.	Directional
OTA dynamic range	It was agreed that the requirement assumes that the wanted signal and interfering signal come from the same direction. Testing is defined in the *receiver target reference direction*, meaning that this is directional requirement. This requirement is not applicable for *BS type 2-O*.	Directional
OTA in-band selectivity and blocking	The OTA blocking requirement is tested as follows: - In the reference direction of the minSENS OSDD using the minSENS based requirement level - In each of the 4 conformance direction at the extremities of the *OTA REFSENS RoAoA* using the REFSENS based requirement level.	Directional
OTA out-of-band blocking	Out of band blocking is a long test and hence it is optimum to minimize the number of conformance test directions. The *antenna gain* can be assumed to be maximum at the reference direction, therefore it is sufficient to show conformance at the reference direction only.	Directional, except for co-location requirement applicable for *BS type 1-O*
OTA receiver spurious emission	The Rx spurious emissions requirement follows the approach for the Tx spurious emissions, i.e. the emissions in the spurious region needs to be measured as TRP due to unknown *radiation pattern*.	TRP
OTA receiver intermodulation	Since RX sensitivity and blocking already test at all conformance directions, it is sufficient to test RX IM only in a single direction.	Directional
OTA in-channel selectivity	In channel selectivity requirement is tested in a single direction.	Directional

7 OTA measurement systems

7.1 General

All the measurement systems are described for measurement in Normal test conditions, unless otherwise stated.

7.2 Indoor Anechoic Chamber

7.2.1 Measurement system description, Normal test conditions

This method measures the EIRP in an anechoic chamber with the separation between the manufacturer declared coordinate system reference point of the BS and the phase centre of the receiving antenna of no less than $2D^2/\lambda$, where D is the largest dimension of the antenna of BS and λ is the wavelength. The measurement system setup is as depicted in figure 7.2.1-1 for TX requirements, and in figure 7.2.1-2 for RX requirements.

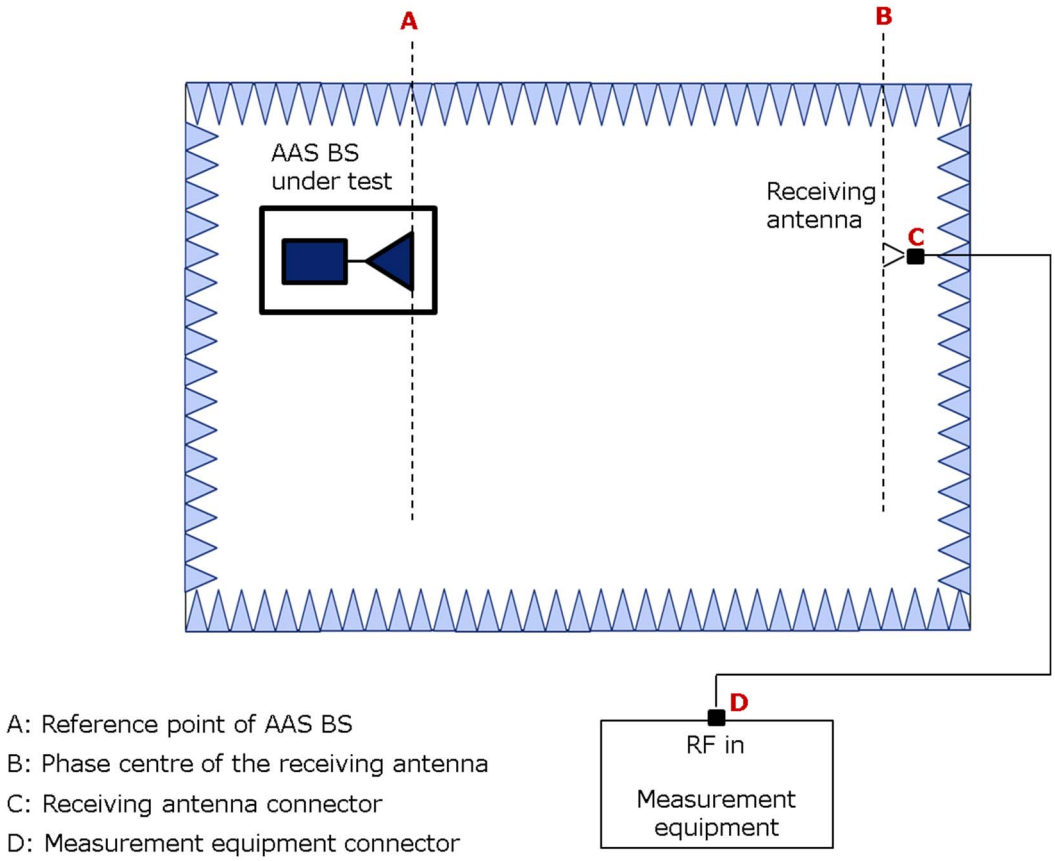

Figure 7.2.1-1: IAC measurement system setup for TX requirements

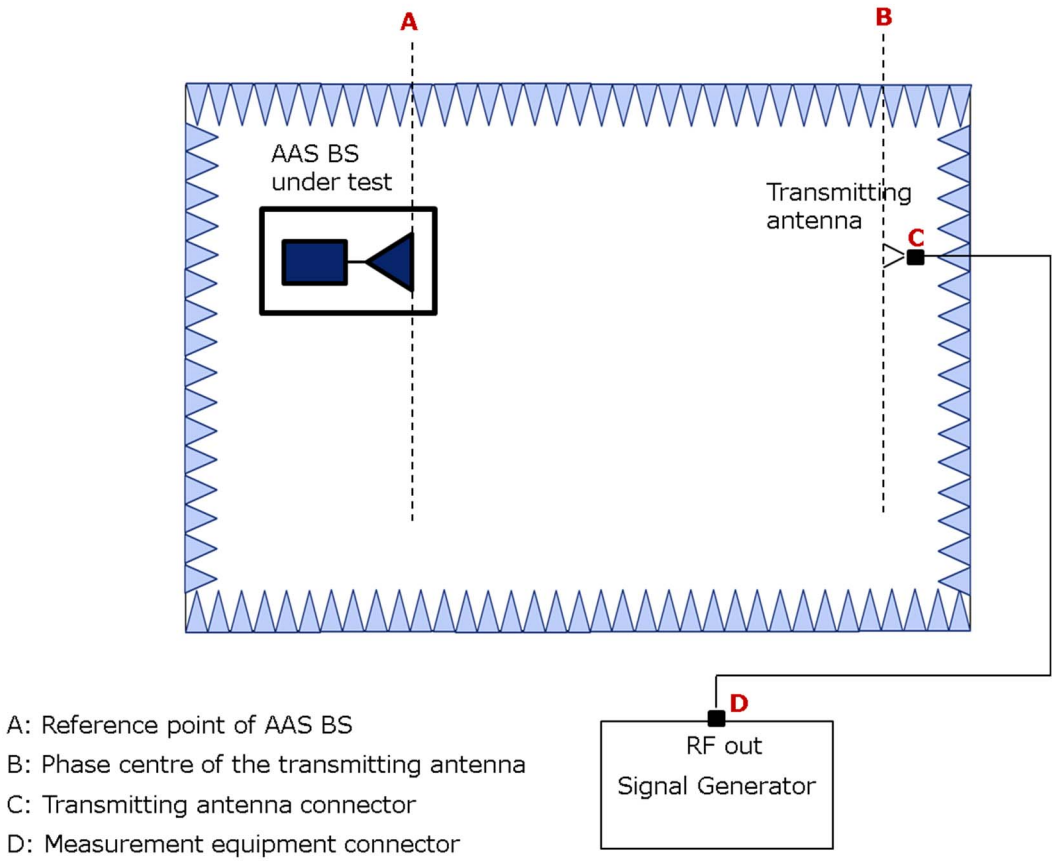

Figure 7.2.1-2: IAC measurement system setup for RX requirements

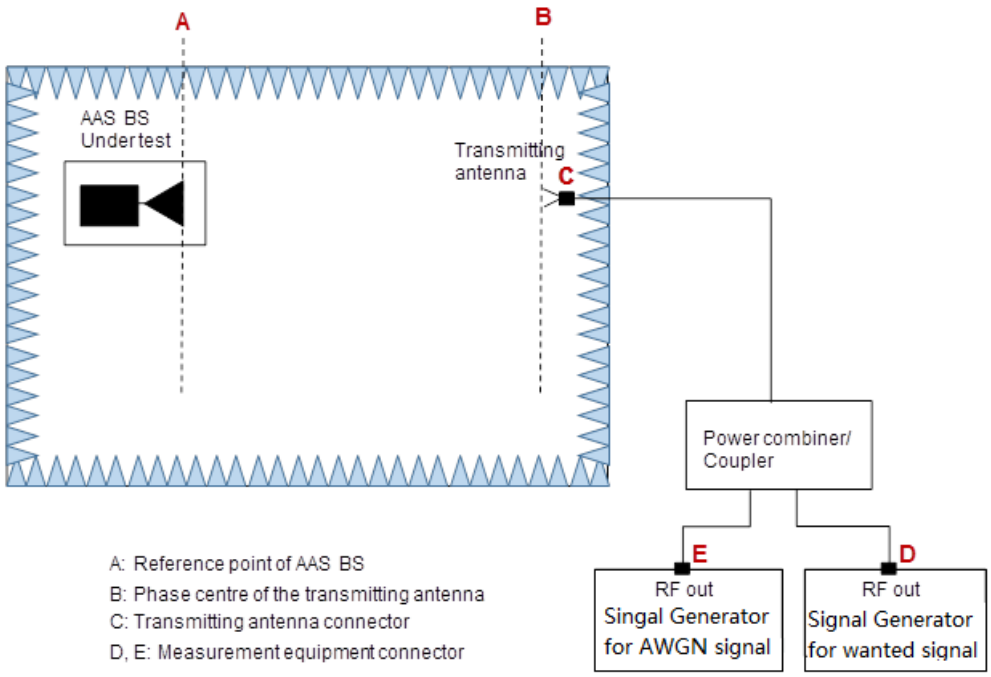

Figure 7.2.1-3: IAC measurement system setup for OTA dynamic range

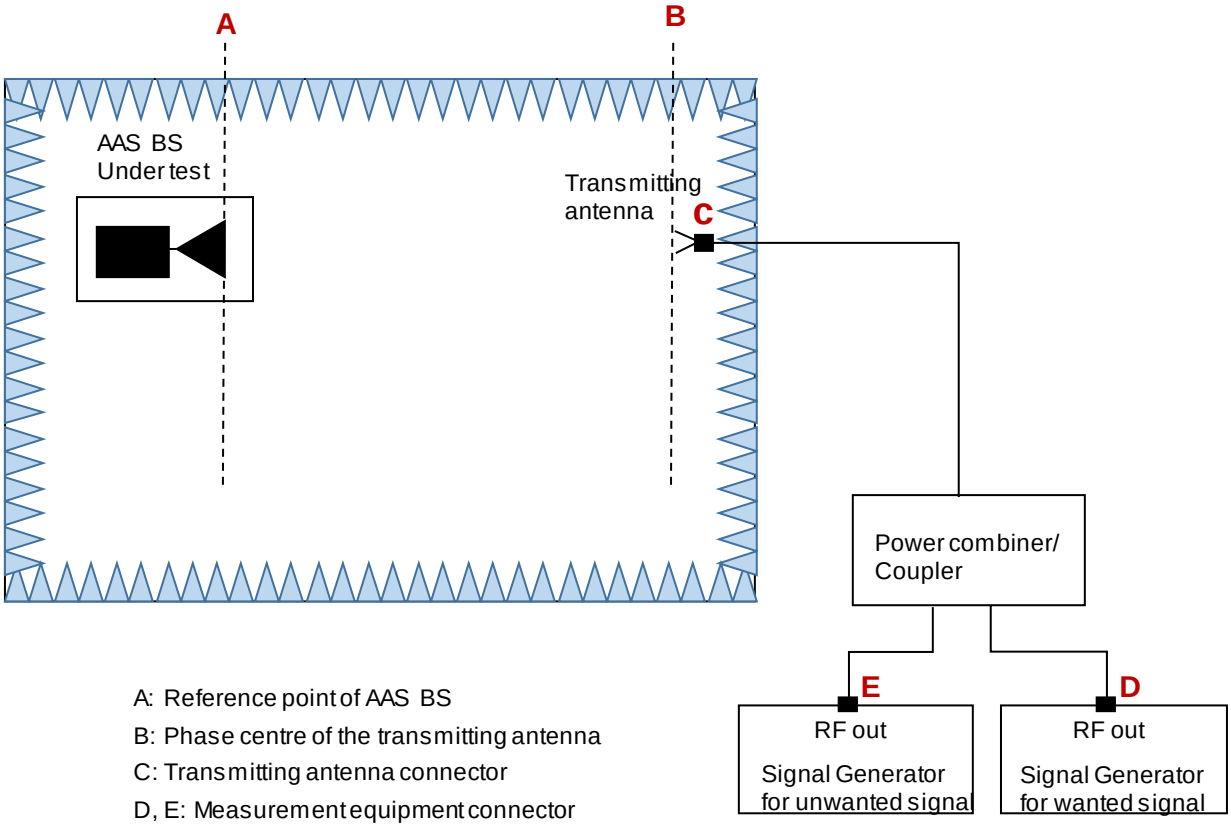

Figure 7.2.1-4: IAC measurement system setup for adjacent channel selectivity, general blocking, narrowband blocking and in-channel selectivity

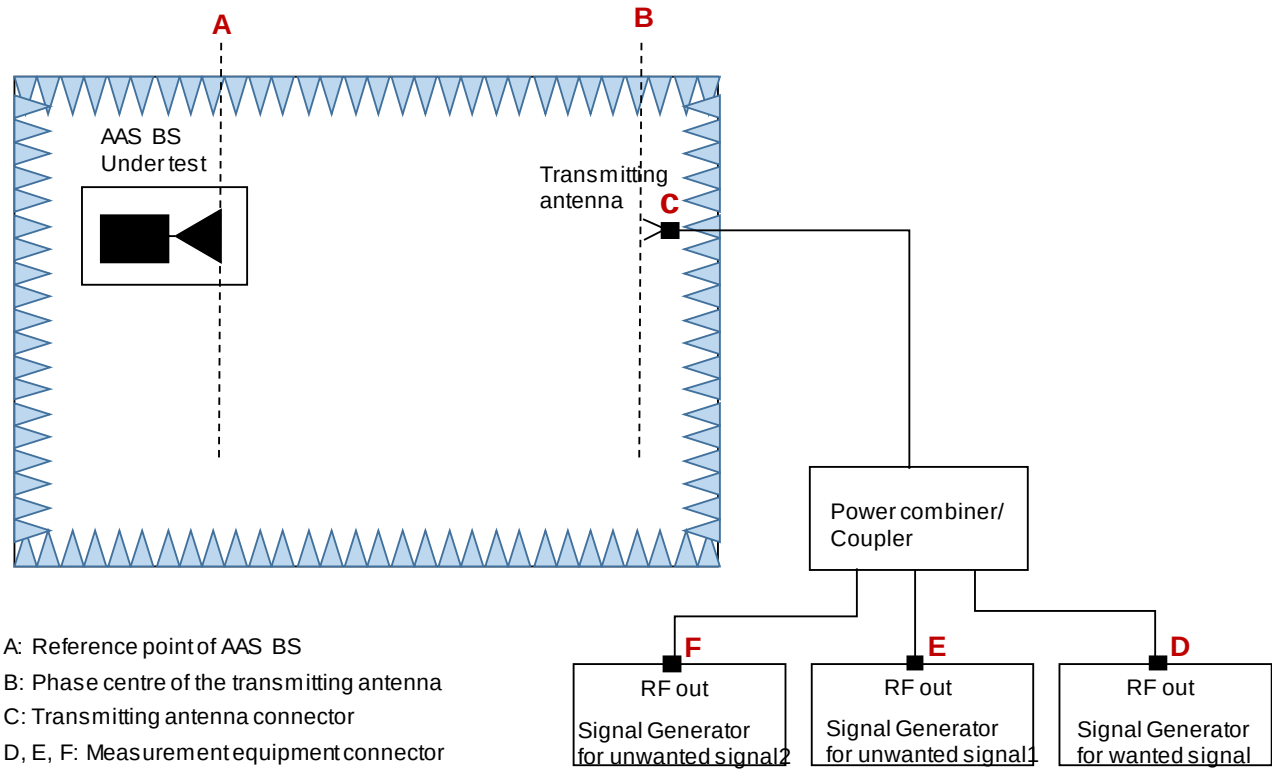

Figure 7.2.1-5: IAC measurement system setup for OTA receiver intermodulation

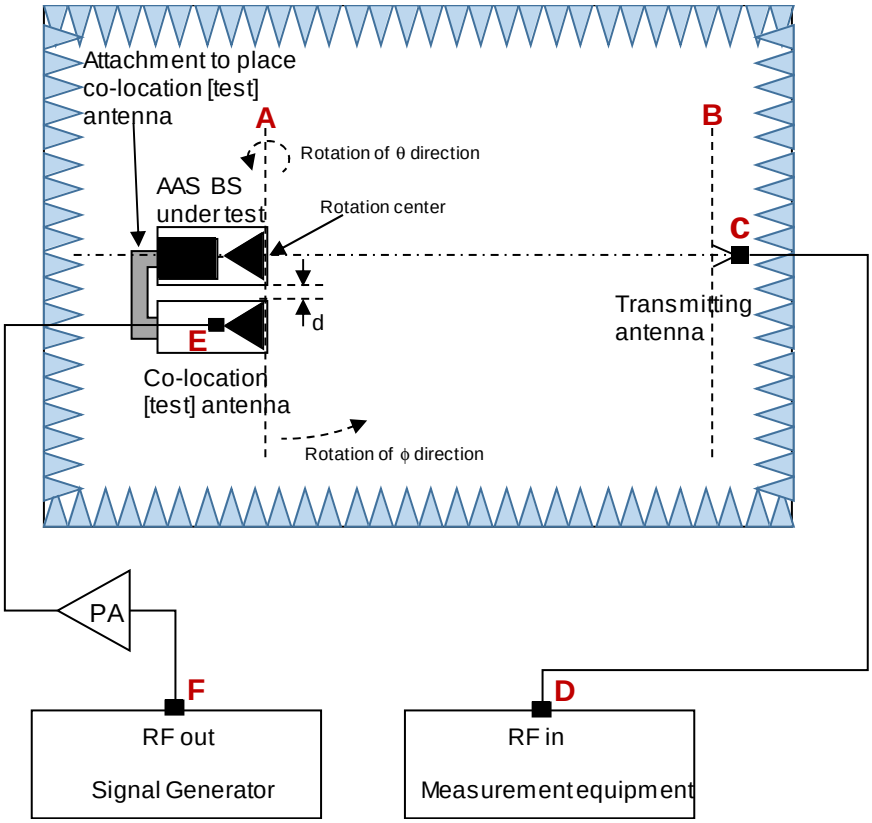

(a) General set-up (top view)
(Positioner is not described here)

Figure 7.2.1-6: IAC measurement system setup for co-location requirements

7.2.2 Measurement system description, Extreme test conditions

This method places the BS under test inside a RF transparent environmentally sealed enclosure so that the BS temperature can be controlled whilst the result of the OTA chamber facility is at nominal temperature.

The separation between the manufacturer declared coordinate system reference point of the BS and the phase centre of the receiving antenna of no less than $2D^2/\lambda$, where D is the largest dimension of the antenna of BS and λ is the wavelength. The measurement system setup is as depicted in figure 7.2.2-1.

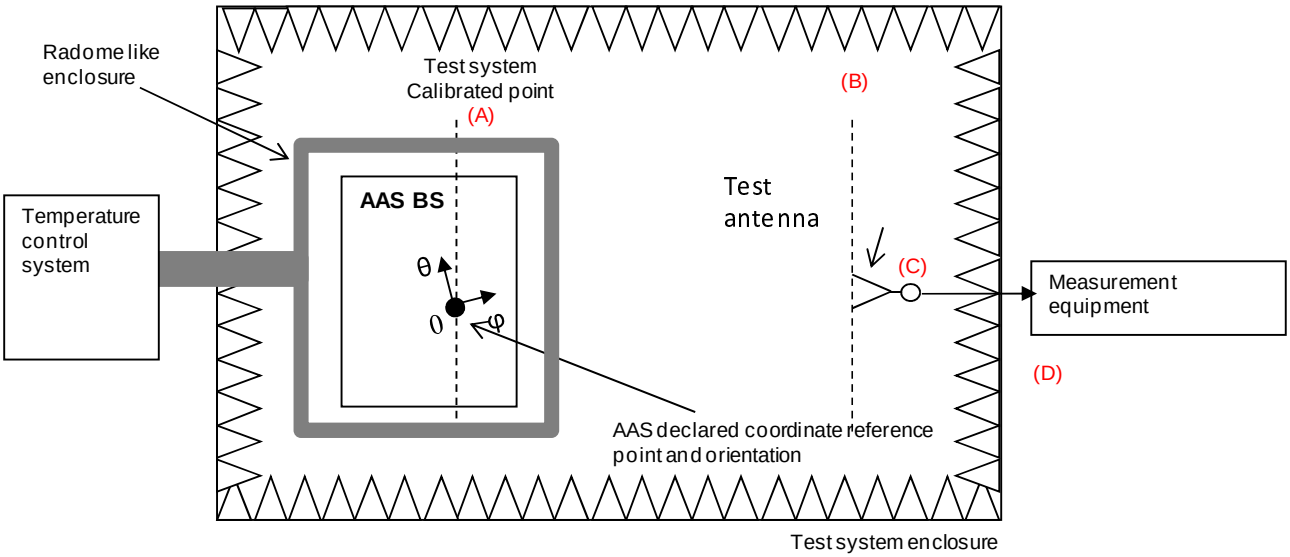

A: Reference point of AAS BS
B: Phase centre of the receiving antenna
C: Receiving antenna connector
D: Measurement equipment connector

Figure 7.2.2-1: IAC measurement system setup for EIRP accuracy, Extreme test conditions

7.2.3 Test method limitations

The maximum size of the BS is a chamber restriction that would affect the quality of the quiet zone. For larger BS sizes larger size chambers should be considered such that the uncertainty of the quiet zone is taken into account.

7.3 Compact Antenna Test Range

7.3.1 Measurement system description, Normal test conditions

In case of TX requirements measurement, the Compact Antenna Test Range (CATR) uses the BS which radiates a wavefront to a range antenna reflector which will then collimate the radiated spherical wavefront into a feed antenna. The sufficient separation between the BS and the receiver (feed antenna shown in figure 7.3.1-1) so that the emanating spherical wave reaches nearly plane phase fronts from transmitter to receiver. The BS transmits a wavefront that will illuminate the range antenna reflector, which will then reflect the transmitted energy into the feed antenna. The range feed antenna is connected to a vector network analyzer or other equivalent test equipment.

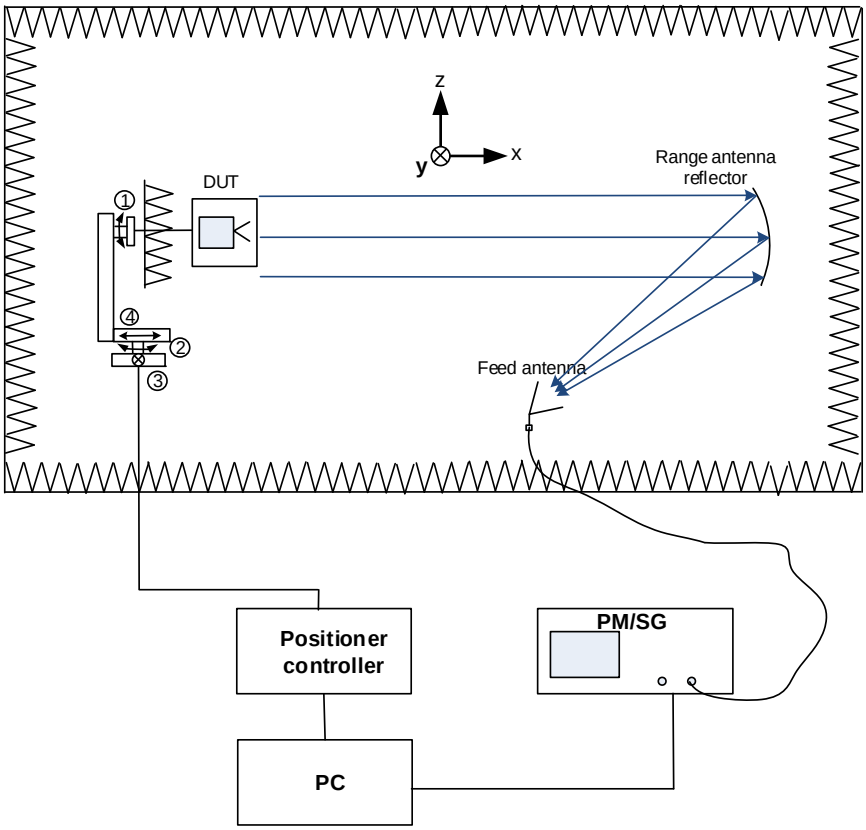

Figure 7.3.1-1: CATR measurement system setup, TX requirements

In case of RX requirements, the CATR uses the feed antenna which radiates a spherical wavefront to a range reflector antenna which will then collimate the radiated spherical wavefront to the BS. There is sufficient separation between the BS and the transmitter (feed antenna shown in figure 7.3.1-2) so that the emanating spherical wave reaches nearly plane phase fronts from transmitter to receiver. The feed antenna transmits a wavefront that will illuminate the range antenna reflector, which will then reflect the transmitted energy towards the BS.

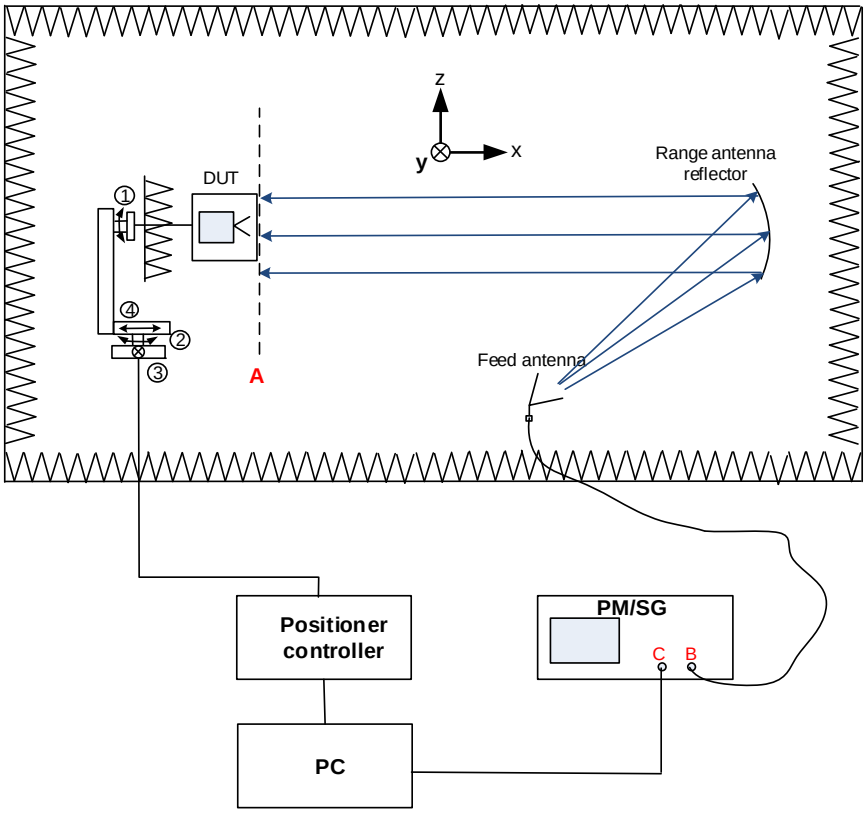

Figure 7.3.1-2: CATR measurement system setup, RX requirements

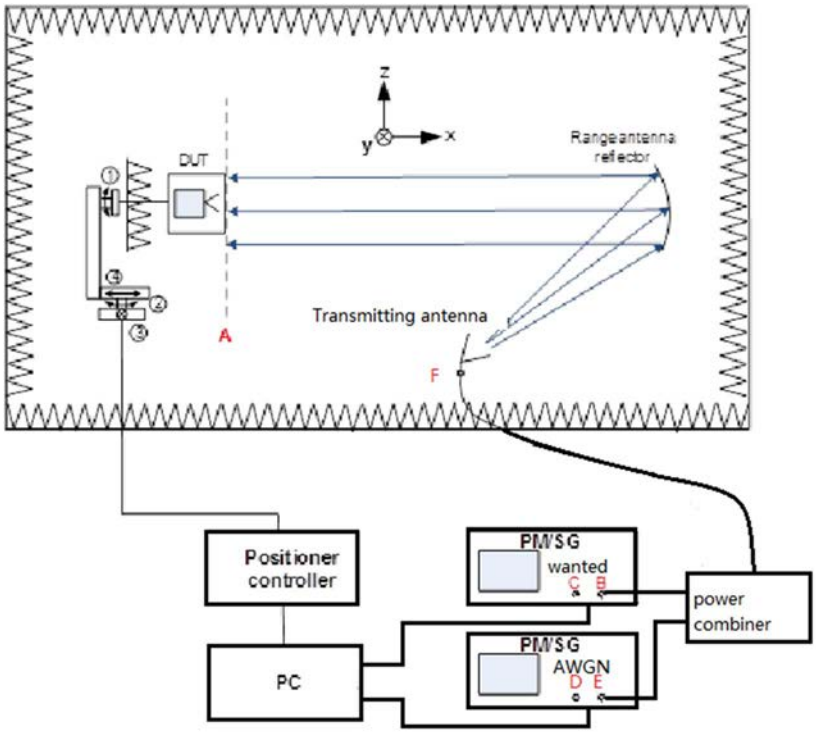

Figure 7.3.1-3: CATR measurement system setup, RX OTA dynamic range, ACS, general blocking and narrowband blocking

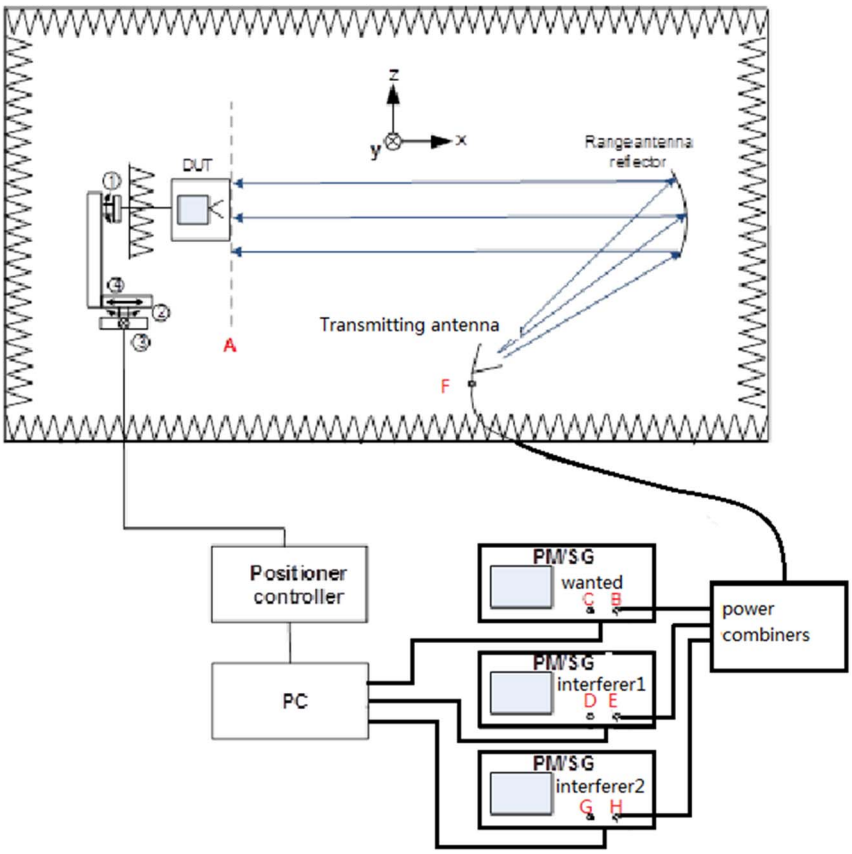

Figure 7.3.1-4: CATR measurement system setup, OTA RX IMD

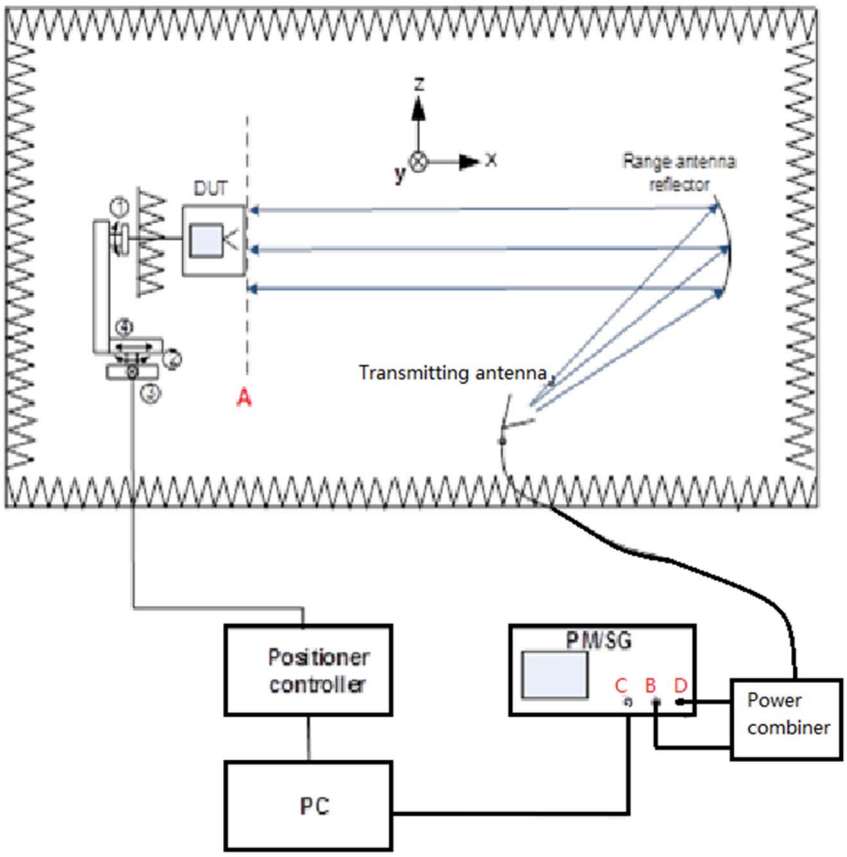

Figure 7.3.1-5: CATR measurement system setup for OTA ICS

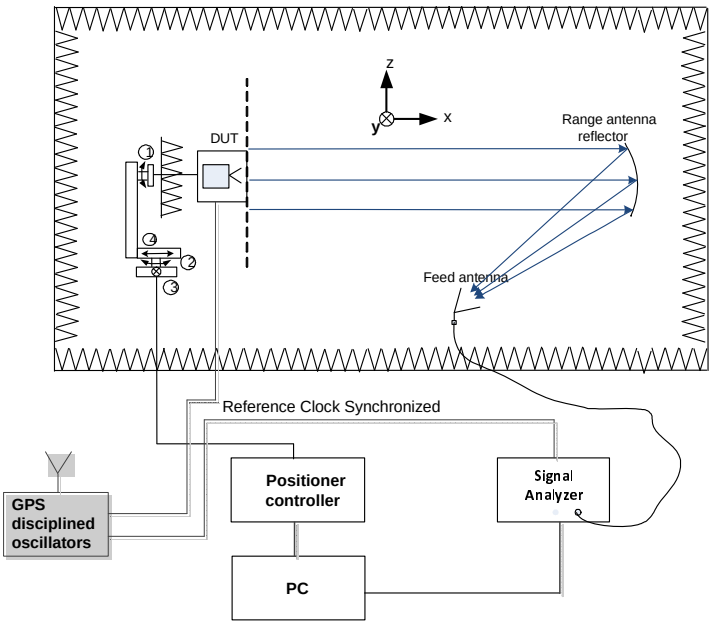

Figure 7.3.1-6: CATR measurement system setup for TAE

7.3.2 Measurement system description, Extreme test conditions

This method places the BS under test inside a RF transparent environmentally sealed enclosure so that the BS temperature can be controlled whilst the result of the OTA chamber facility is at nominal temperature.

The Compact Antenna Test Range (CATR) uses the BS which radiates a wave front to a range antenna reflector which will then collimate the radiated spherical wave front into a feed antenna. The sufficient separation between the BS and the receiver (feed antenna shown in figure 7.3.2-1) so that the emanating spherical wave reaches nearly plane phase fronts from transmitter to receiver. The BS transmits a wave front that will illuminate the range antenna reflector, which will then reflect the transmitted energy into the feed antenna. The range feed antenna is connected to a vector network analyzer or other equivalent test equipment.

For the environmental control of the BS required to produce the extreme temperature environment the BS under test is placed inside a RF transparent environmentally sealed enclosure so that the BS temperature can be controlled whilst the result of the OTA chamber facility is at nominal temperature.

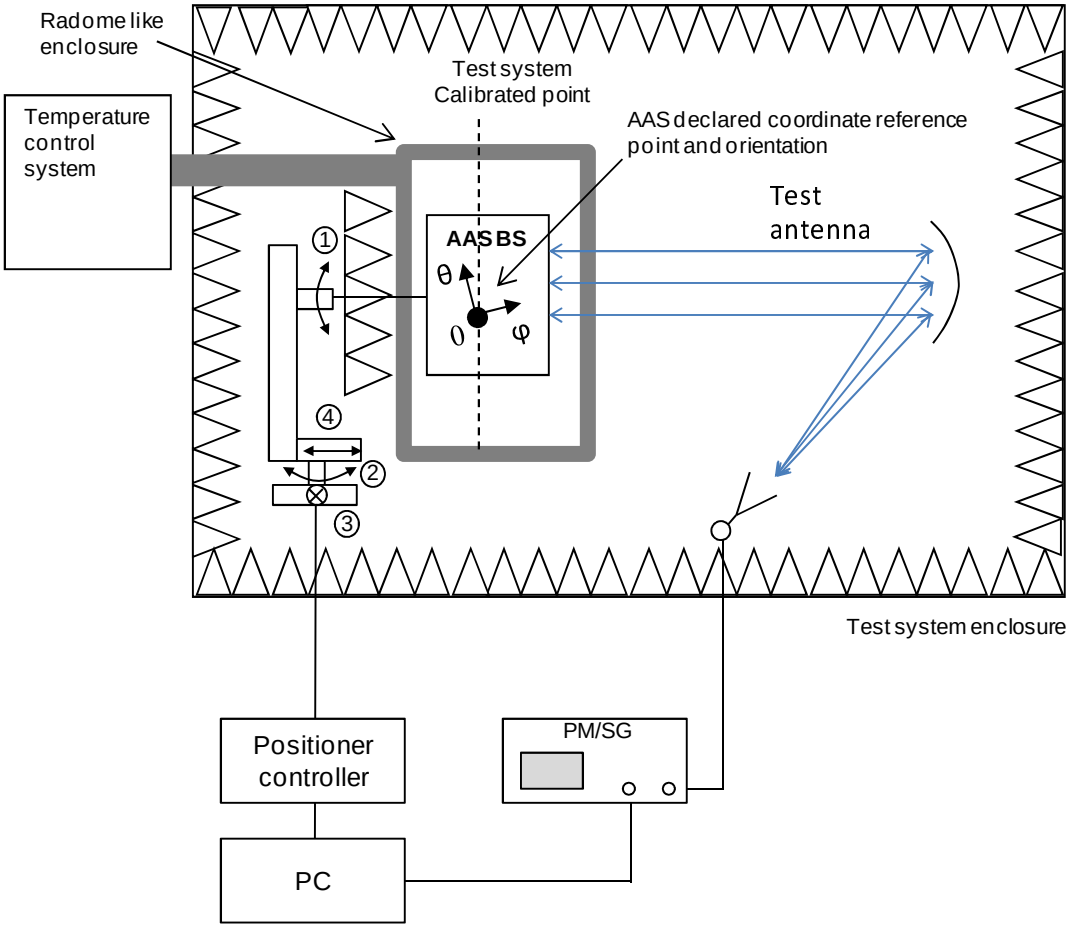

Figure 7.3.2-1: CATR measurement system setup for EIRP accuracy in Extreme test conditions

7.3.3 Test method limitations

The maximum size of the BS is a chamber restriction that would affect the quality of the quiet zone. For larger BS sizes larger size chambers should be considered such that the uncertainty of the quiet zone is taken into account.

The CATR is not suitable for low frequency measurements.

7.4 One Dimensional Compact Range

7.4.1 Measurement system description

The principle of the One Dimensional Compact Range measurement setup is shown in figure 7.4.1-1. It closely resembles the standard compact range chamber. But for the generation of the plane wave in the quiet zone the proposed method uses a special one dimensional probe instead of the standard set up comprising a concave mirror and a feed

horn. The main advantage is a reduced chamber size and a simplified probe system replacing the standard mirror feed horn set up.

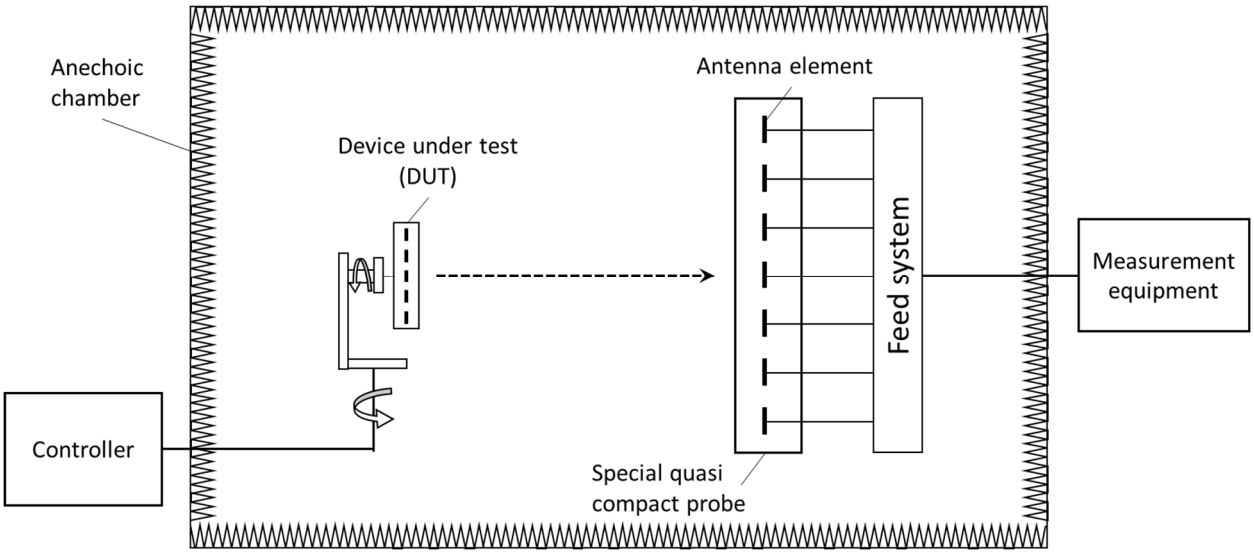

Figure 7.4.1-1: One Dimensional Compact Range measurement system setup for EIRP accuracy

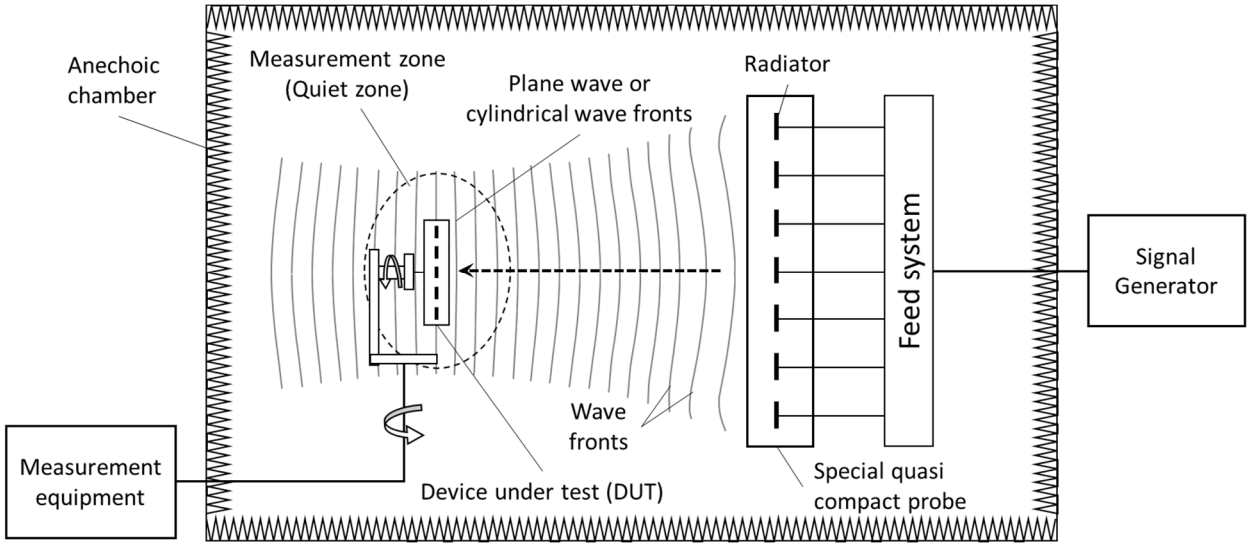

Figure 7.4.1-2: One Dimensional Compact Range measurement system setup for OTA sensitivity

The probe antenna is set up of a one dimensional array of antenna modules, connected by a special feed system. Optimized amplitude and phase settings in the feed system result in a plane wave in vertical direction. As no near field to far field transformation has to be carried out, it is not required to measure a whole set of azimuth and elevation angles.

7.4.2 Test method limitations

One Dimensional Compact Range test method is only suitable for BS whose *antenna array* consists of a single column *antenna array*. For a BS equipped with multi-column *antenna array*, this method would not be suitable due to the high amplitude uncertainty of edge column elements. High amplitude uncertainty makes testing of the declared steering angles not possible to meet EIRP accuracy requirements.

7.5 Near Field Test Range

7.5.1 Measurement system description

The Near Field Test Range (NFTR) measurement techniques consist in measuring amplitude and phase of the modulated signal at the BS under test, on some specific surfaces such as planar, cylindrical, and spherical. Each of the near field test methods can be implemented by one or more mechanical rotations of the probe and/or BS under test as shown in figure 7.5.1. One or more mechanical movement can be substitute by a probe array. All the scanning methods will need an RF transmit and receive system equipped with an automated scanning, a data collection and control system, and computerized analysis ability.

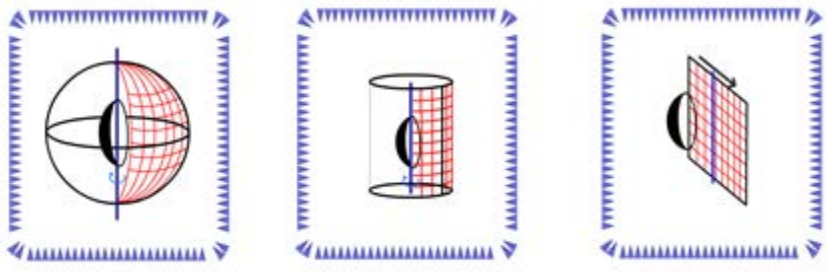

Figure 7.5.1: Probe/scanner near field systems: spherical, cylindrical and planar

NOTE: Although there are three methods available for obtaining the near field data, the spherical method is used as a working example.

In case the radiated field is sampled on a sphere surrounding completely the BS under test, the 3D full sphere value of the measured parameter can be measured in near field when the BS is:

- transmitting (for TX requirements) a defined modulated signals in a declared beam, or
- receiving (for RX requirements) a defined modulated signals.

The near field measurement technique would imply the use of mathematical artefact, NF to FF transform in order to have the measured parameter's value the in far field. The near field to far field transform is based on the well-known Huygens-Fresnel principle. The spherical modal wave expansion is the implicit application of the Huygens principle. A direct solution of the Helmholtz equations is found by applying boundary conditions on the surface S at infinity. From the tangential fields over the surface, the modal coefficients can be determined using the orthogonality of the modal expansion. Based on this formulation, the near field sampling criteria does play an important role.

7.5.2 Test method limitations

7.5.2.1 OTA EVM measurement

For BS implementations that point a beam in the EVM conformance direction during testing, the near field technique may report too high, but will never report too low EVM. In case the BS does not point a beam centre in the test direction, there is a risk of the near field technique report too low EVM.

7.5.2.2 OTA RX directional requirements

There are some limitations on the use of that the BS must not have any BB beam forming. Considering that BS must have at least 8 TRX the probability of it meeting the restrictive conditions is small. In addition there are some issues surrounding the interference requirements when testing in the near field as the wanted and interfering signal may experience different beam forming.

7.5.2.3 OTA sensitivity measurement

The near field test method is suitable for OTA sensitivity measurement of BS implementations where the beam forming is done on in a fixed or pre-set manner for the measured OSDD declaration, i.e. there is only one interface to digital/baseband processing. The near field test method is not suitable if for the measured OSDD declaration any

combining is not fixed or preset. Some examples of architectures for which near field test method is possible and for which it is not possible are depicted on figure 7.5.2.3-2. The BS under test should not have any other non-linear behaviour that would cause the near field to far field transformation to fail or cause increased OTA sensitivity measurement uncertainty (for example, Automatic Gain Control if applicable must be disabled and the receiver dynamic range must be sufficient to prevent any increased measurement uncertainty due to the range of the near field values.

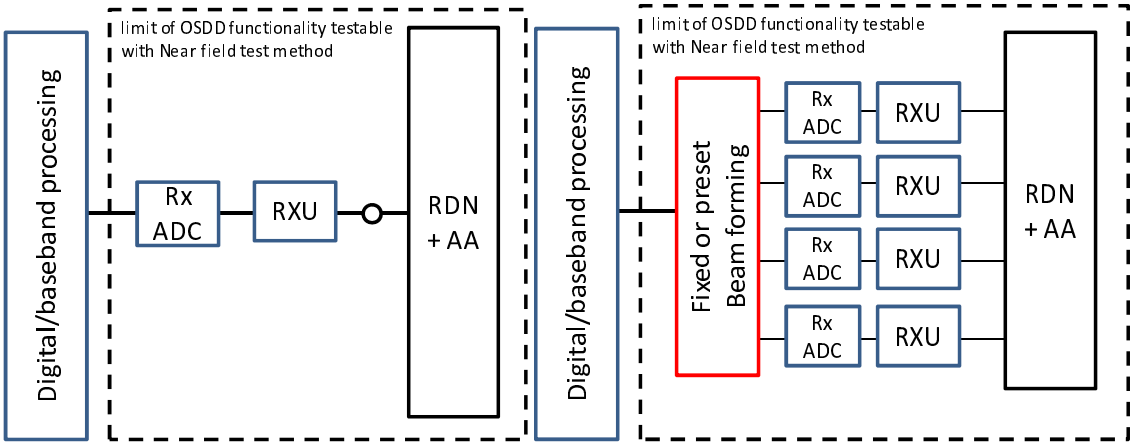

Figure 7.5.2.3-1: Examples of limit of OSDD functionality testable with near field test method for a single OSDD

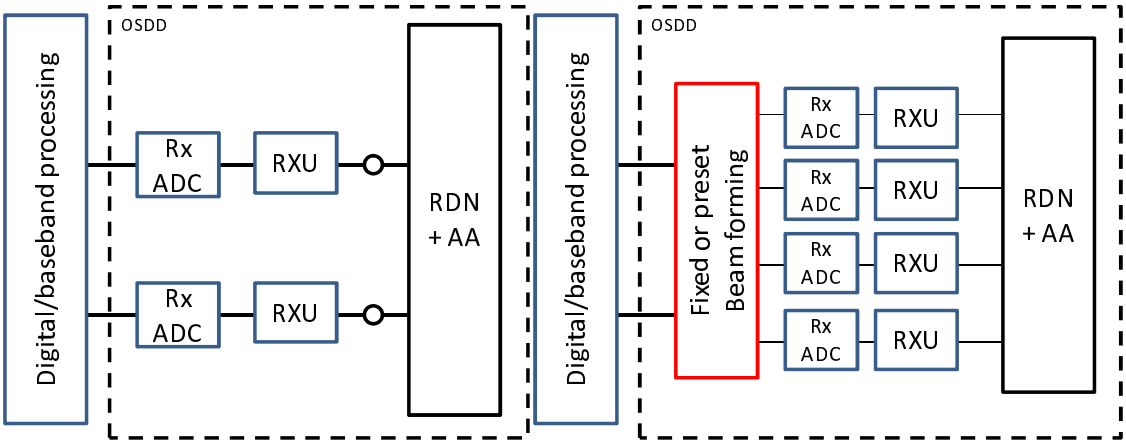

Figure 7.5.2.3-2: Examples of limit of OSDD functionality not testable with near field test method for a single OSDD

7.6 Plane Wave Synthesizer

7.6.1 Measurement system description

This method is an extension of a CATR measurement method as captured in clause 7.3, where the reflector is replaced by an *antenna array*, or Plane Wave Synthesizer (PWS), capable of approximating a plane wave within a specified quiet zone in front of the antenna in a similar manner as the reflector in a CATR system.

The principle of the Plane Wave Synthesizer is shown in figure 7.6.1-1:

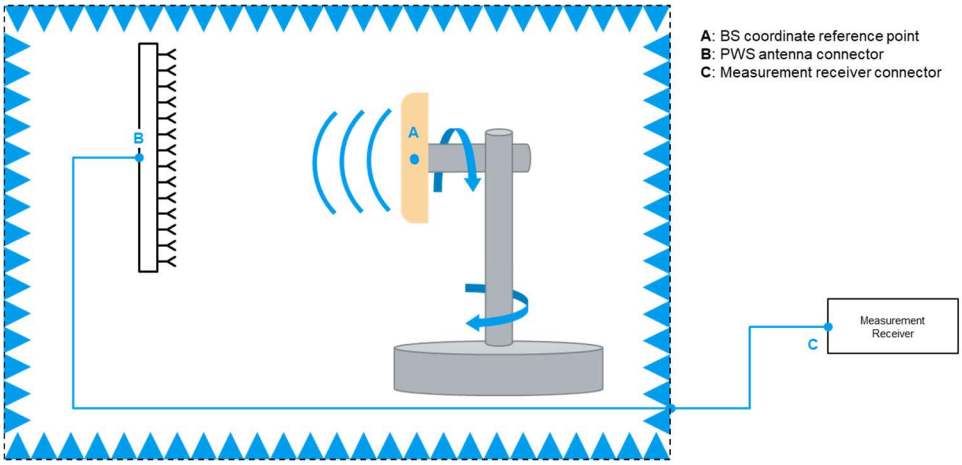

Figure 7.6.1-1: PWS measurement setup, Tx requirements

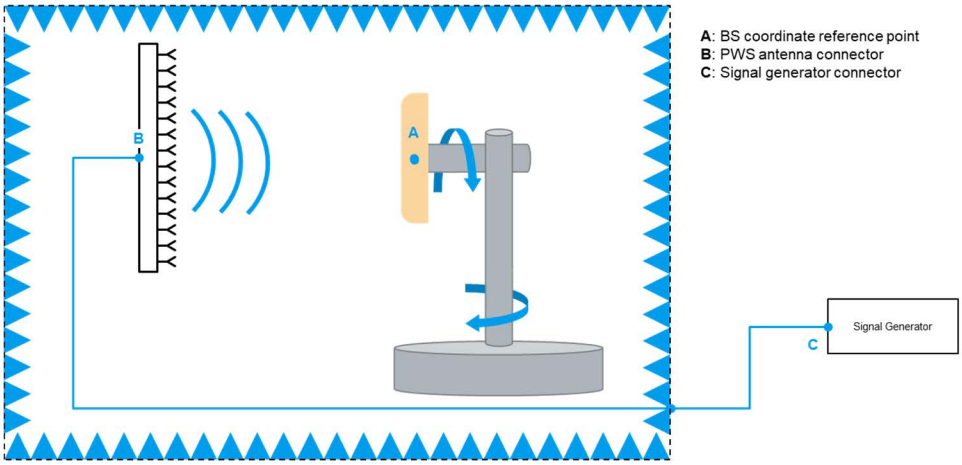

Figure 7.6.1-2: PWS measurement setup, Rx requirements

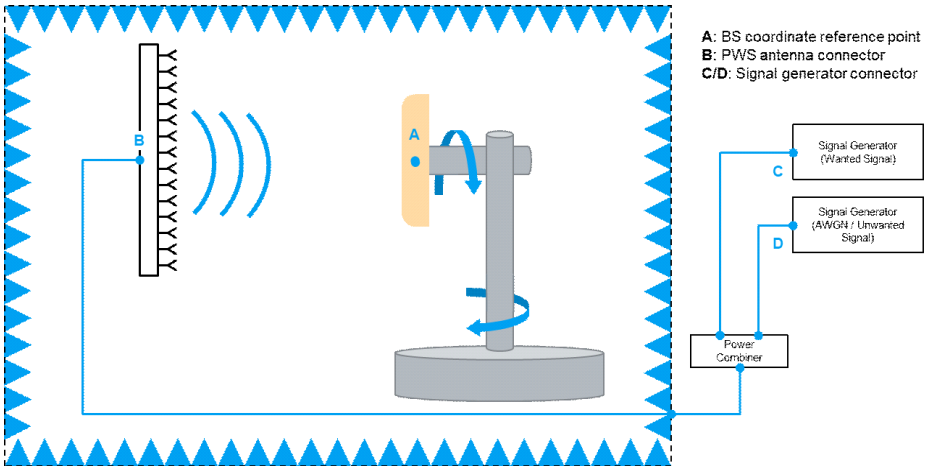

Figure 7.6.1-3: PWS measurement setup, OTA dynamic range, ACS, blocking and ICS

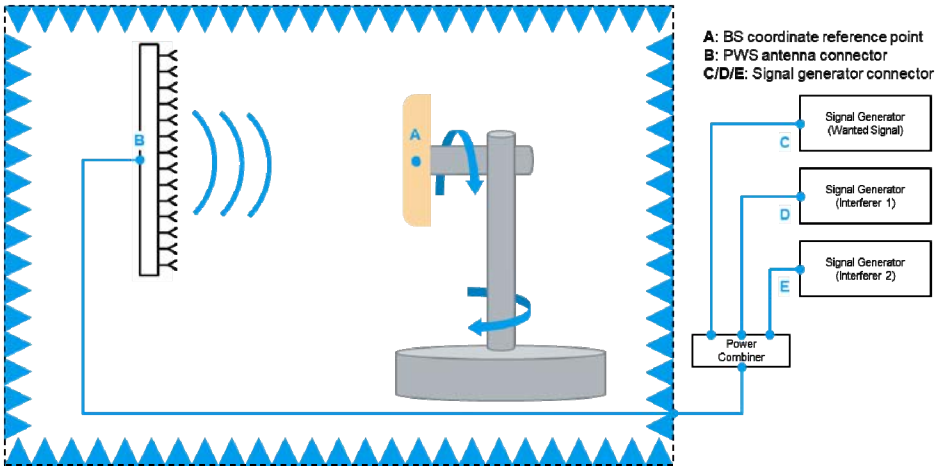

Figure 7.6.1-4: PWS measurement setup, Receiver intermodulation

The PWS typically consists of two main components: the *radiating elements* arranged in the structure of an array and the feeding system. The architecture of the later depends on the adopted technology, e.g. it could be fed by a standard Beam Forming Network (BFN) or by an active system.

Using similar technique of setting the phase and amplitude of the array signals, a quiet zone containing planar waves as a linear superposition of the *array elements*' spherical radiation waves can be created within the near field of the array.

The PWS can achieve far-field testing conditions in a Quiet Zone (QZ) as in the case of CATRs it enables direct measurements of far-field BS performance in a controlled indoor environment as an alternative to CATR.

7.6.2 Test method limitations

The maximum rated Power Density (PD) per section of the PWS area (e.g. dBm/cm^2) might be restricted depending on the implementation. This Power Density at a specific reference plane can be calculated for each BS as a function of the *total radiated power*, the test distance and the *radiation pattern* of the BS.

7.7 General chamber

7.7.1 Measurement system description

The general chamber represents any suitable OTA chamber which shields the BS and CLTA form external interference and prevents reflections within the chamber form altering the coupling between the BS and the CLTA.

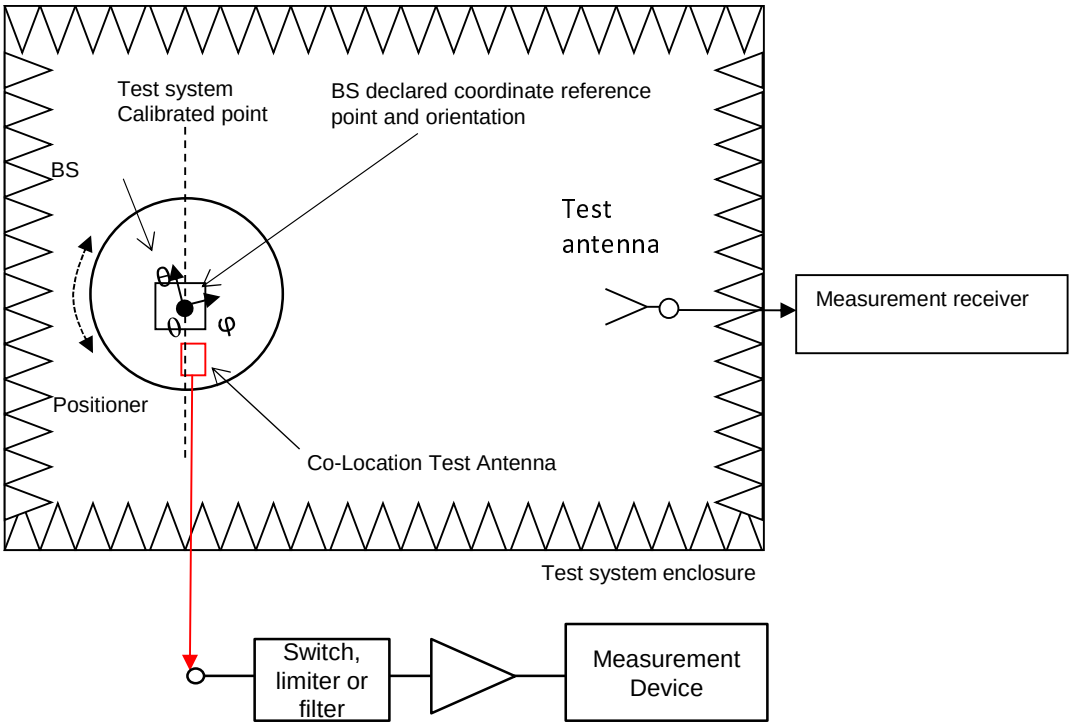

Figure 7.7.1-1: General chamber test system set up diagram for co-location TX OFF and co-location emissions

The OTA measurement receiver must be capable of conforming that the BS is radiating the wanted signal at the required power level, however the measurement is made at the output of the CLTA. The diagram shows a switch/limiter or filter which is used to reduce the level of the wanted signal before the requirement is measured in the measurement device.

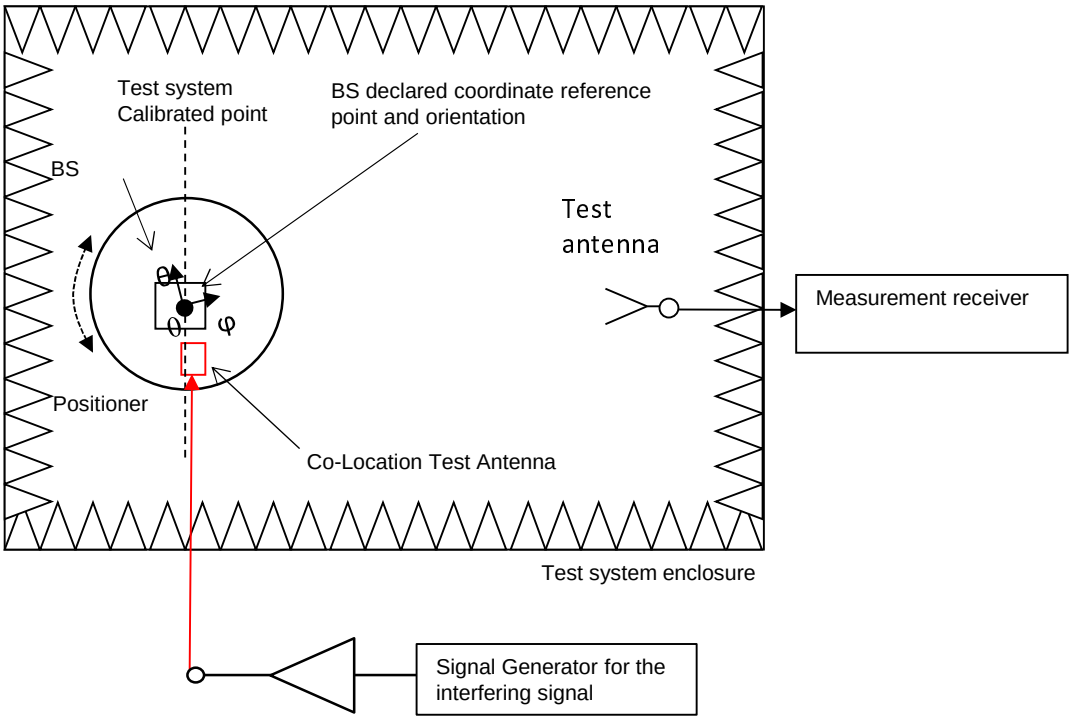

Figure 7.7.1-2: General chamber test system set up diagram for co-location TX IMD

The general chamber represents any chamber capable of performing the OTA transmitter spurious emissions requirements, the OTA operating band unwanted emissions requirements and the OTA ACLR requirements to the specified accuracy.

7.7.2 Test method limitations

7.8 Reverberation chamber

7.8.1 Measurement system description

A reverberation chamber (RC) is an electrically large shielded metal enclosure that employs one or several "stirring" methods to randomize the fields, such as moving paddles, turntables, etc. In this way, a large number of uncorrelated samples is obtained. The volume in the room where the field is well-stirred is the working volume. Here the E-field, averaged over an entire stirring cycle, is independent of the location in the room, i.e. the field is spatially uniform.

For a proper analysis of the measured data a sufficient number of uncorrelated samples is required. The auto-correlation function is used to calculate the offset between statistically uncorrelated samples using the following expression as in IEC 61000-4-21 [11]:

$$\mathrm{r(k)} = \frac{1}{\sigma^2(\mathrm{N}-1)}\sum_{\mathrm{n}=0}^{N-1}(x_n - \langle \mathrm{x} \rangle)\left(x_{\mathrm{mod}(n+k,N)} - \langle \mathrm{x} \rangle\right)$$

where the modulus operator mod(x,y) is the remainder of x/y, here performing a circular shift of the measurement samples over a distance k. The symbols ⟨x⟩ and σ = "std" (x) denote the average value and standard deviation. The threshold value for uncorrelated samples, r_{lim}, is defined as in IEC 61000-4-21 [11]:

$$r_{lim} \leq 0.37(1 - 7.22/N^{0.64})$$

The distance k_{lim} between uncorrelated samples is calculated as the minimum k-value satisfying $r(k) \leq r_{lim}$. The number of uncorrelated samples is calculated as:

$$N_{ind} = \frac{N}{k_{\mathrm{lim}}}$$

When properly designed, this facility can be used for non-directional antenna measurements, such as TRP. In fact, a well-stirred RC is capable of measuring TRP in a reliable way, regardless of the directivity pattern of the emission or frequency range. When measuring TRP of sources with a directive pattern, special care must be taken to characterize the working volume of the chamber.

The purpose of the chamber characterization is to ensure that the effect of a non-uniform field distribution in the chamber has a negligible influence on the measurement result when the BS is placed in the working volume. Lack of chamber uniformity is a major contributor to measurement uncertainty in reverberation chambers and should be handled with care.

The uniformity test can be quite time consuming and the test can be performed separate from the BS measurement. Due to the non-negligible size of BS equipment the BS can have a significant influence on the uniformity. To take this effect into account, either the BS itself must be present in the room during characterization or an absorber with dimensions equal or larger than the BS must be placed at the BS's location in the room.

The characterization procedure consists of placing a reference transmitter antenna (REF TX ant) at different locations and with different orientations in the room and measuring the Power Transfer Function (PTF) between the REF TX and chamber's RX antenna, see figure 7.8.1-1. The actual mode of RC operation shall be used, including stirrer movement, BS movement, diversity antenna usage, etc. The directivity of the REF TX ant will influence the spatial uniformity of the room, a more directive REF TX ant is better at detecting parts of the room that are less-well stirred. Therefore, the REF TX ant chosen for the uniformity test should excite the chamber in a similar way as the BS.

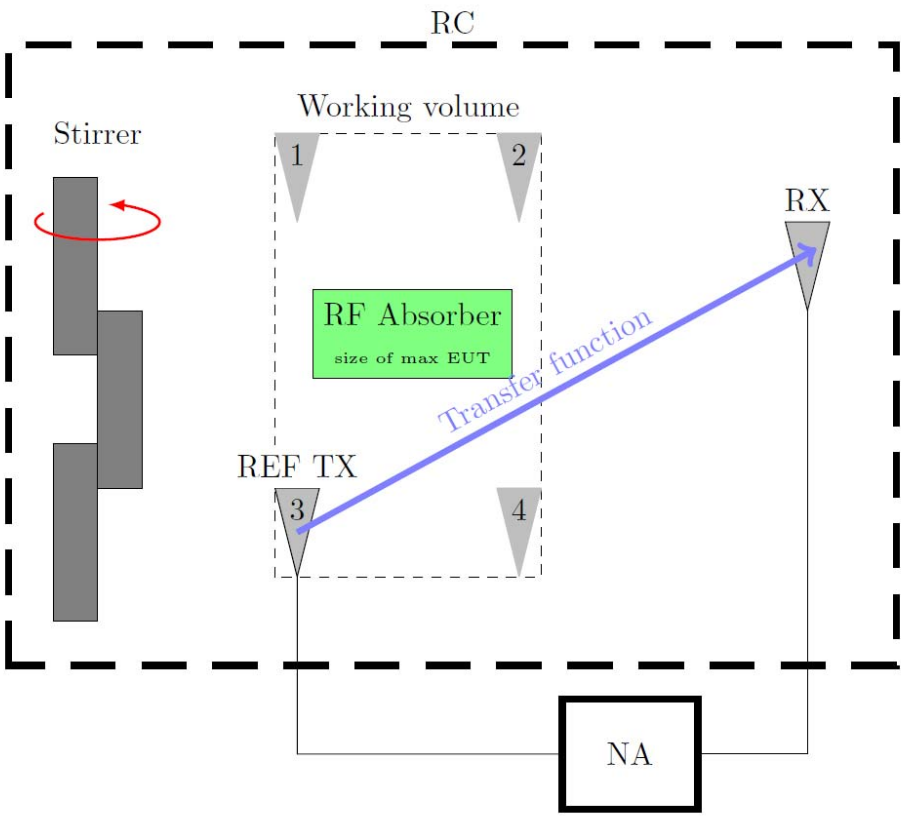

Figure 7.8.1-1: Setup for characterization of a reverberation chamber

The working volume shall be at least half a wavelength from the chamber walls and other electromagnetic reflective objects according to [12]. According to IEC 61000-4-21 [11] this distance may be restricted to 0.75 m below 100 MHz. The number of positions and orientations to use depends on the chamber size and the directivity of the REF TX ant. Measurements made at positions and orientations at the edges of the working volume are used to characterize the chamber and derive certain components of uncertainty.

The exact number of positions and orientations remain for further study, but at least (3) uncorrelated locations should be used and (6) uncorrelated orientations per position when directive spurs are to be detected.

Different test equipment set ups can be used for the acquisition of the PTF between REF TX and RX. Such as devices capable of directly extracting the PTF, like a Vector Network Analyzer (VNA) or a set up with separate transmitter and receiver test equipment, such as a Signal Generator (SG) and Spectrum/signal Analyzer (SA) configuration. In the latter case the operator should account for the losses in the set up originating from cables, mismatch, etc.

When using a VNA, the REF TX ant and the measurement receive antenna (RX) are connected to the test equipment. For each location/orientation *n* of the REF TX ant, RC sample, and desired frequency *f*, the power transfer function

$$P_n = \langle |S_{21}|^2 \rangle$$

is measured. The explicit dependence on RC sample and frequency is not written out here.

In case of using a SG and SA the PTF is calculated as follows:

$$P_n = \frac{\langle |U_r{}^2| \rangle}{50\ P_t M_t L_s}$$

with U_r the received voltage, 50 Ω being the reference impedance of the SA, P_t the transmit power of the signal source, L_s the losses in in the cables, Mt the mismatch efficiency at the TX antenna calculated as $M_t = 1 - |S_{11}|^2$.

At least 250 uncorrelated samples shall be used per position/orientation. Using a lower number is not compatible with the underlying analysis on measurement uncertainty, see IEC 61000-4-21 [11] and publication in [13].

The following tests are performed and shall be verified for each frequency:

a) Uniformity of transfer function: For each location/orientation evaluate P_n. The standard deviation of these average values shall be below the assumed measurement uncertainty level for A6-7 uncertainty contributor, as described in annex A.6.

b) Dynamic range: The dynamic range of each P_n shall be at least 20 dB.

c) Uncorrelated samples: At least 250 uncorrelated samples shall be used.

It is important to note that spatial uniformity (and number of uncorrelated samples) in an RC is harder to achieve for more directive antenna patterns. As such, the measurement uncertainty of a sub-optimally configured room will be higher and additional measures to randomize the fields should be considered. Optimization of the BS position in the chamber and positional stirring are good starting points.

7.8.2 Test method limitations

The reverberation chamber test method is not suitable for testing spurious emissions at very low frequencies. The MU evaluation is applicable for the frequency above 380 MHz.

8 Measurement system calibration

8.1 General

Calibration of the OTA measurement systems is assumed to be the same for FR1 and FR2 frequencies, unless otherwise stated.

8.2 Indoor Anechoic Chamber calibration

Calibration shall be done to ensure that the SNR at the measurement equipment input is appropriate and the reception signal level at the measurement equipment is within the dynamic range of measurement equipment.

1) Calibration system configuration

   For TX requirements: connect the reference antenna and the receiving antenna to the measurement RF out port and RF in port of the network analyzer, respectively, as shown in figure 8.2-1. The amplifier may be installed between C and D if required.

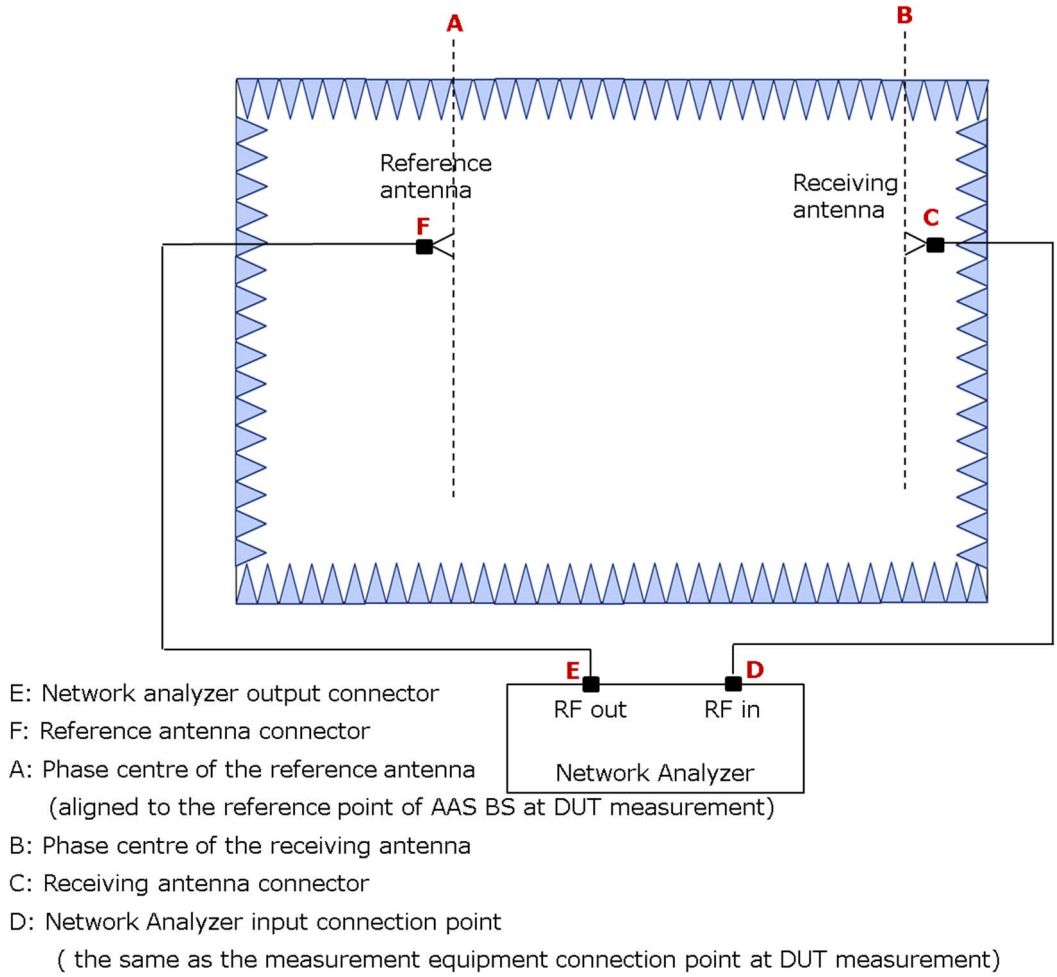

Figure 8.2-1: Indoor Anechoic Chamber calibration system setup for TX requirements

For RX requirements: Connect the reference antenna and the transmitting antenna to RF in port and RF out port of the network analyzer, respectively, as shown in figure 8.2-2.

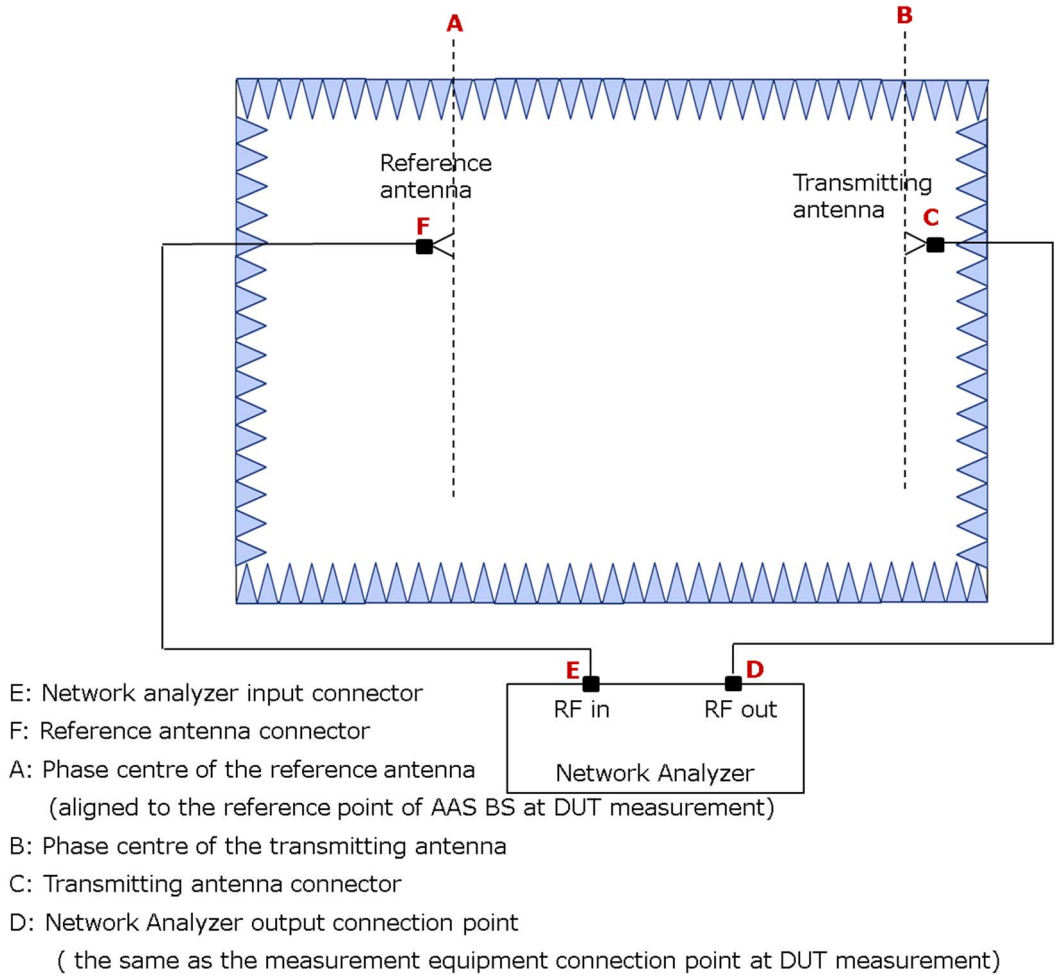

Figure 8.2-2: Indoor Anechoic Chamber calibration system setup for RX requirements

2) Install the reference antenna with its *beam peak direction* and the height of its phase centre aligned with the receiving antenna, or transmitting antenna (in case of transmitter or receiver requirement, respectively).

3) Set the centre frequency of the network analyzer to the carrier centre frequency of the tested signal and measure $LF_{E\rightarrow D}$, which is equivalent to 20log|S21| (dB) obtained by the network analyzer:

   - $LF_{E\rightarrow D}$: Pathloss between E and D in figure 8.2-1 (for Tx requirements) and 8.2-2 (for Rx requirements).

4) Measure the cable loss, $LF_{E\rightarrow F}$ between the reference antenna connector and the network analyzer connector:

   - $LF_{E\rightarrow F}$: Cable loss between E and F in figure 15.1-1.

5) Calculate the calibration value between A and D with the following formulas:

   - $L_{cal,\ A\rightarrow D} = LF_{E\rightarrow D} + G_{REF\_ANT,\ F\rightarrow A} - LF_{E\rightarrow F}$.

   - $L_{cal,\ A\rightarrow D}$: Calibration value between A and D in figure 8.2-1 (for Tx requirements) and 8.2-2 (for Rx requirements).

   - $G_{REF\_ANT,\ A\rightarrow F}$: *Antenna gain* of the reference antenna.

8.3 Compact Antenna Test Range calibration

The calibration measurement is done by using a reference antenna (SGH used in figure 8.3-1 or 8.3-2) with known efficiency or gain values. In the calibration measurement the reference antenna is measured in the same place as the BS, and the attenuation of the complete transmission path (C↔A, as in figure 8.3-1 or 8.3-2) from the BS to the

measurement receiver is calibrated out. Figures 8.3-1 and 8.3-2 presents a setup of a typical compact antenna test range for TX and RX requirements, respectively.

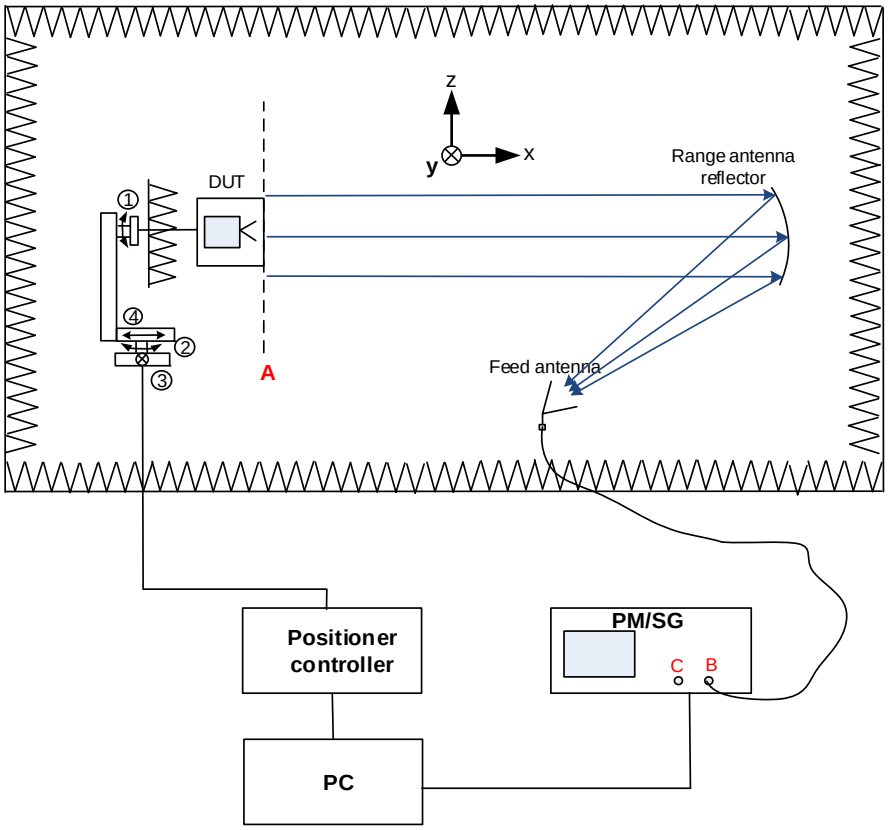

Figure 8.3-1: CATR calibration system setup, TX requirements

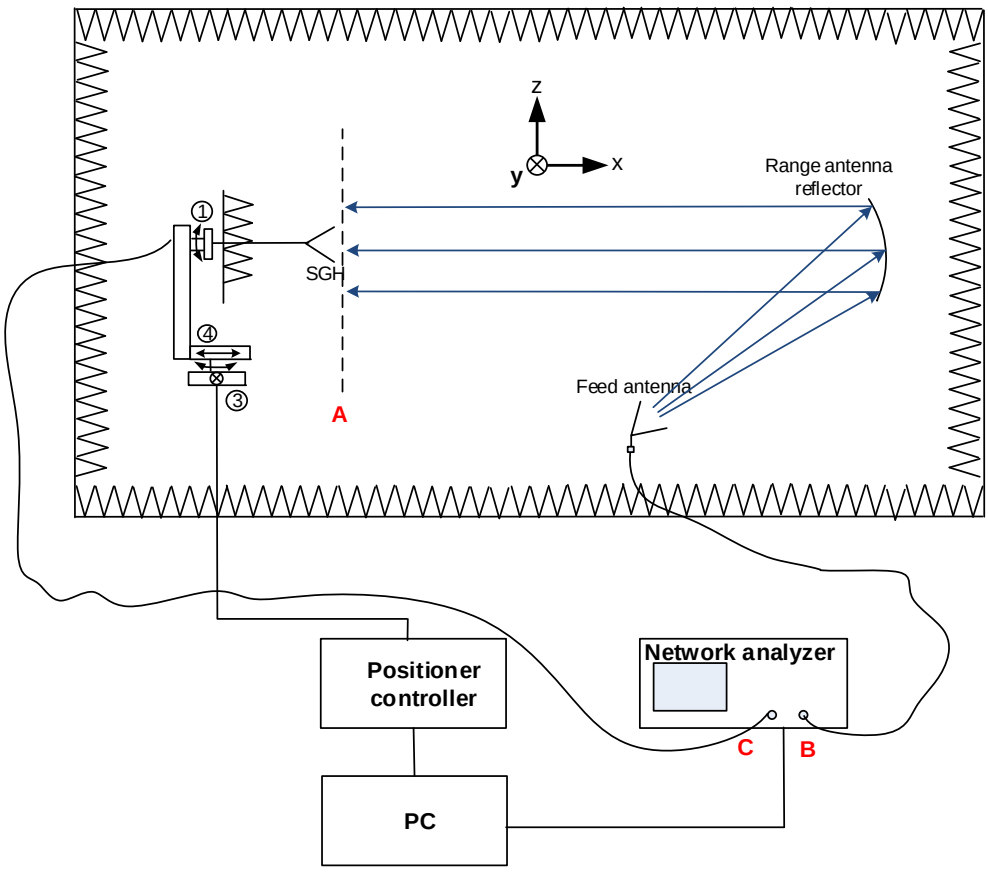

Figure 8.3-2: CATR calibration system setup, RX requirements

1) Path loss calibration C→A:

   a) Measure SGH (or other calibrated reference antenna) reflection coefficient separately at the antenna's connector with a network analyser (or equivalent measurement equipment) to obtain Γ_{SGH}.

   b) Measure cable loss from point C to input of SGH, call this $L_{C\leftrightarrow SGH}$ which is the equivalent of $20\log|S_{21}|$ from the use of a network analyser.

   c) Calculate the combined total path loss from C→A by using the following expression:

      $L_{SGHcal} = L_{C,SGH} + 10\log(1 - |\Gamma_{SGH}|^2) - G_{SGH}$,

      where $10\log(1 - |\Gamma_{SGH}|^2)$ is the compensation for SGH connector return loss, G_{SGH} is the known gain of the reference SGH.

2) Connect SGH and C↔A cable.

3) To remove polarization(s) mismatch between range antenna (labelled as feeder antenna in diagram) and SGH use positions to position the SGH in the boresight of range antenna.

4) Measure path loss C→B with network analyzer $L_{C\rightarrow B} = 20\log|S_{21}|$.

5) Calculate the test path loss compensation factor. This is the total path loss between A↔B using the results from step 1c and 4. $L = L_{SGHcal} - L_{C\rightarrow B}$.

Where Γ_{SGH} is the reflection coefficient (or mismatch) seen at the SGH connector (S_{11} with a network analyzer).

The CATR test setup and calibration for FR2 are expected to be similar to those of FR1, although the test chamber dimensions and associated MU values will scale due to the shorter wavelengths and larger relative array apertures. However, it is noted that in order to achieve the test instrument uncertainties that were assumed, calibration of the spectrum analyzer may be needed.

8.4 One Dimensional Test Range calibration

8.5 Near Field Test Range calibration

Calibration accounts for the various factors affecting the measurements. These factors include components such as range length path loss, cable losses, gain of the receiving antenna, etc. Each measured data point for both radiated power and radiated sensitivity is transformed from a relative value in dB to an absolute value in dBm. For doing that the total path loss from the BS to the measurement receiver, named L path loss is calibrated out. The calibration measurement is usually done by using a reference antenna with known gain. This approach is based on the so called gain-comparison method as in IEEE Standard Test Procedures for Antennas [7]. Figure 8.5-1 shows the typical configuration for measuring path loss.

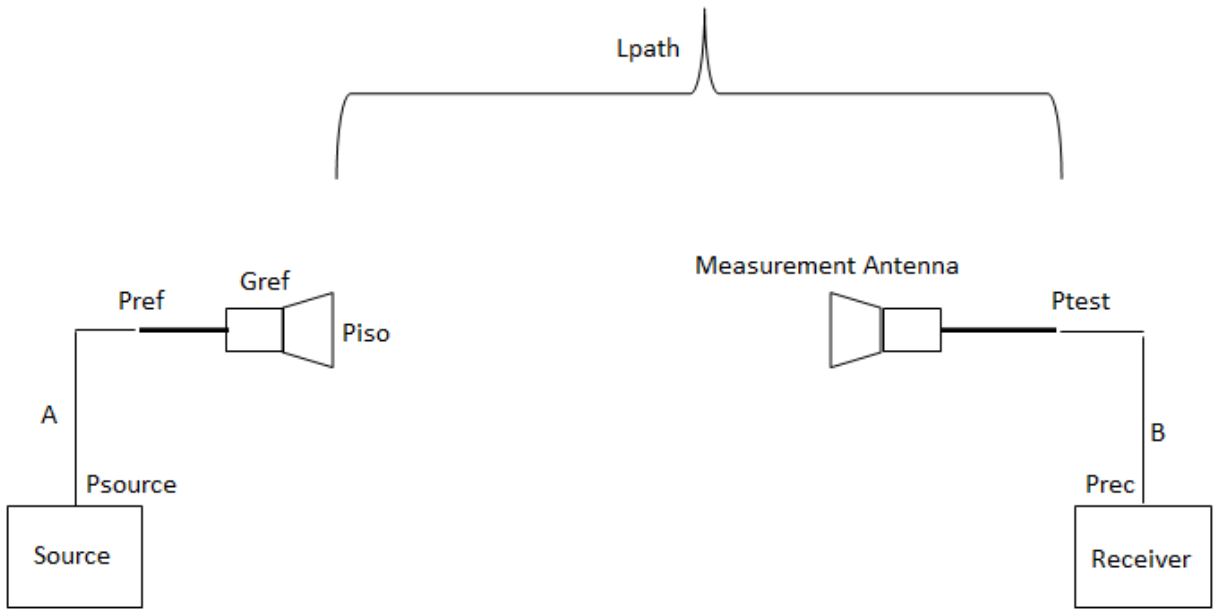

Figure 8.5-1: Typical L_{path} loss measurement configuration

The L_{path} pathloss can be determined from the power into the reference antenna by adding the gain of the reference antenna:

$$P_{iso} = P_{ref} + G_{ref}$$

so that:

$$L_{path} = P_{ref} + G_{ref} - P_{test}$$

In order to determine P_{ref}, a cable reference measurement is performed in order to calibrate out the A, and B paths. Assuming that the power at the source is fixed, it can be showed that:

$$P_{ref} – P_{test} = P_{rec}' - P_{rec}$$

Where P_{rec} and P_{rec}' are the power measured at the receiver during the calibration measurement with the reference antenna and the power measured at the receiver during the cable reference measurement respectively. L_{path} loss is then given by:

$$L_{path} = G_{ref} + P_{rec}' – P_{rec}$$

8.6 Plane Wave Synthesizer calibration

The calibration measurement is done by using a reference antenna with known efficiency or gain values (e.g. SGH). In the calibration measurement the reference antenna is measured in the same place as the BS, and the attenuation of the complete transmission path (C↔A, see figure 8.6-1) from the BS to the measurement receiver is calibrated out.

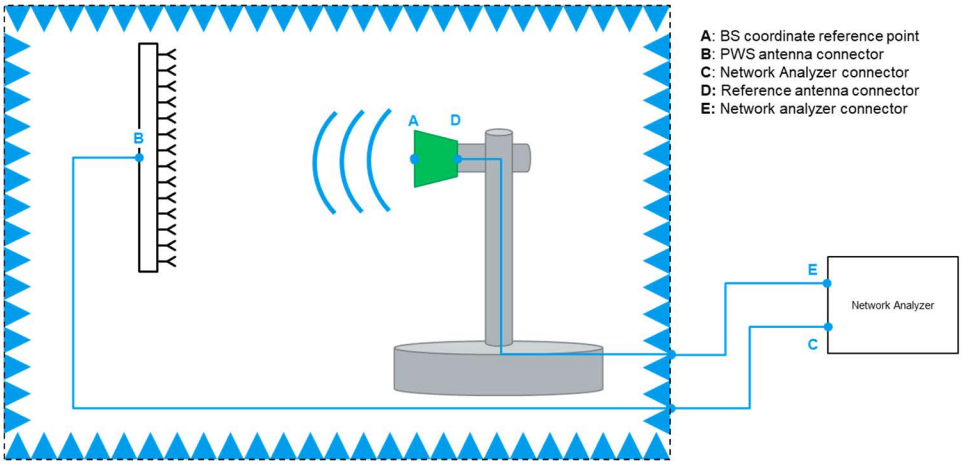

Figure 8.6-1: Path loss calibration in PWS, TX requirements

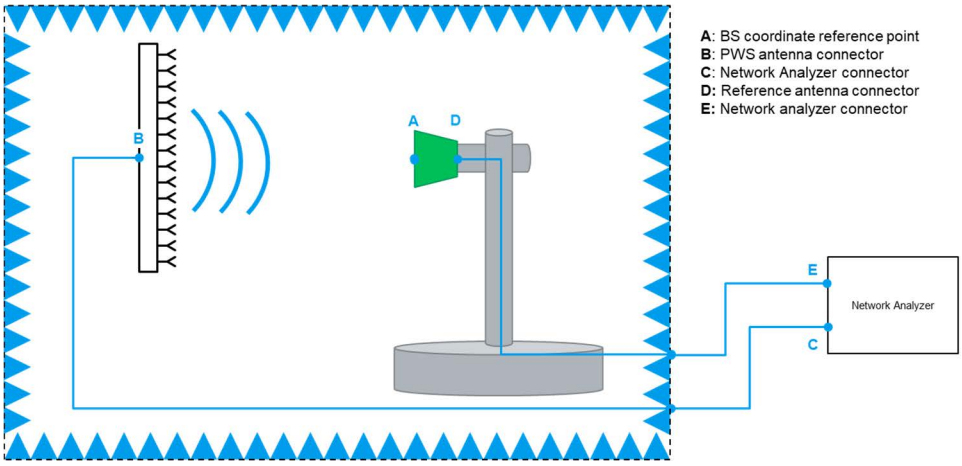

Figure 8.6-2: Path loss calibration in PWS, RX requirements

1) Path loss calibration E→A:

   a) Measure SGH (or other calibrated reference antenna) reflection coefficient separately at the antenna's connector with a network analyzer (or equivalent measurement equipment) to obtain Γ_{SGH}.

   b) Measure cable loss from point E to input of SGH, call this $L_{E\leftrightarrow SGH}$ which is the equivalent of $20\log|S_{21}|$ from the use of a network analyzer.

   c) Calculate the combined total path loss from E→A by using the following expression:

      $L_{SGHcal} = L_{E,SGH} + 10\log(1 - |\Gamma_{SGH}|^2) - G_{SGH}$, where $10\log(1 - |\Gamma_{SGH}|^2)$ is the compensation for SGH connector return loss, G_{SGH} is the known gain of the reference SGH.

2) Connect SGH and D↔E cable.

3) Measure path loss C→E with network analyzer $L_{C\rightarrow E} = 20\log|S_{21}|$.

4) Calculate the test path loss compensation factor. This is the total path loss between C↔A using the results from step 1c and 3. $L = L_{SGHcal} - L_{C\rightarrow E}$.

Where Γ_{SGH} is the reflection coefficient (or mismatch) seen at the SGH connector (S_{11} with a network analyzer).

8.7 General chamber calibration

The OTA path of the general chamber is calibrated according to its chamber type using the methodology in clause 8.2 to 8.6.

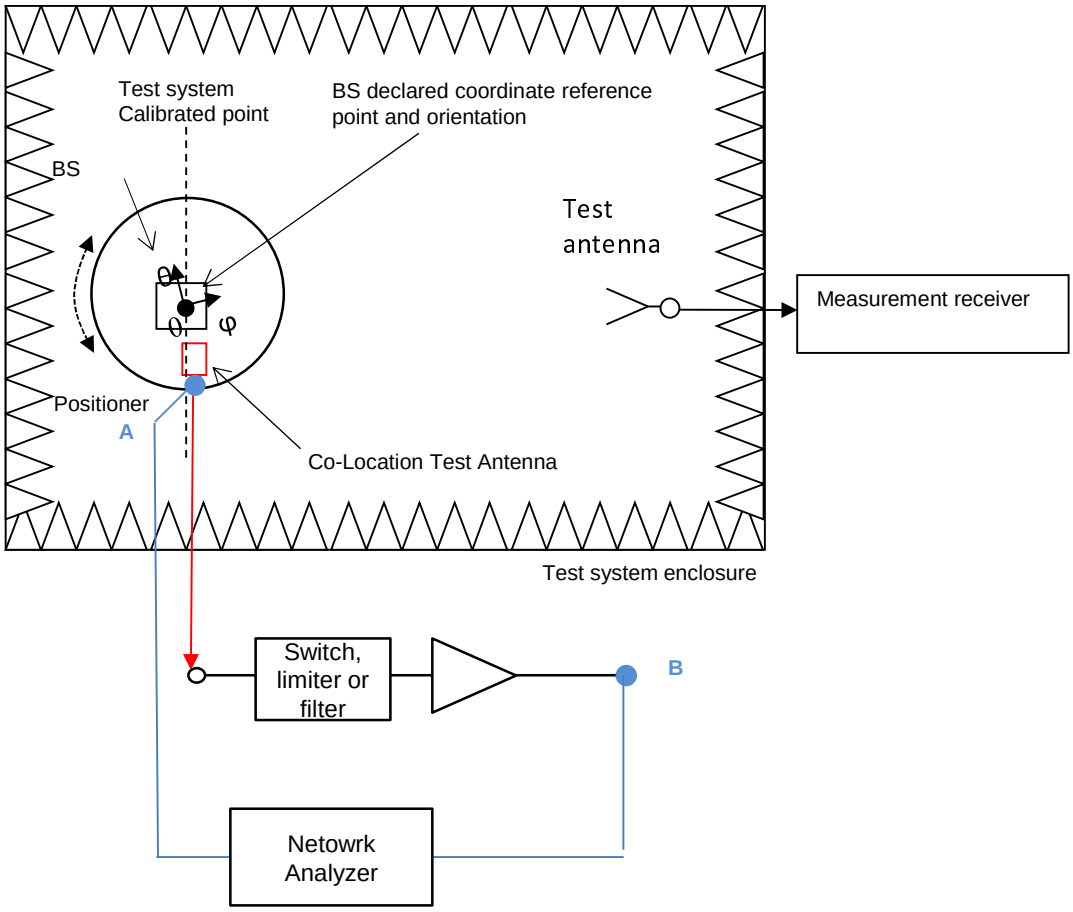

Figure 8.7-1: General chamber test system set up diagram for co-location TX OFF and co-location emissions

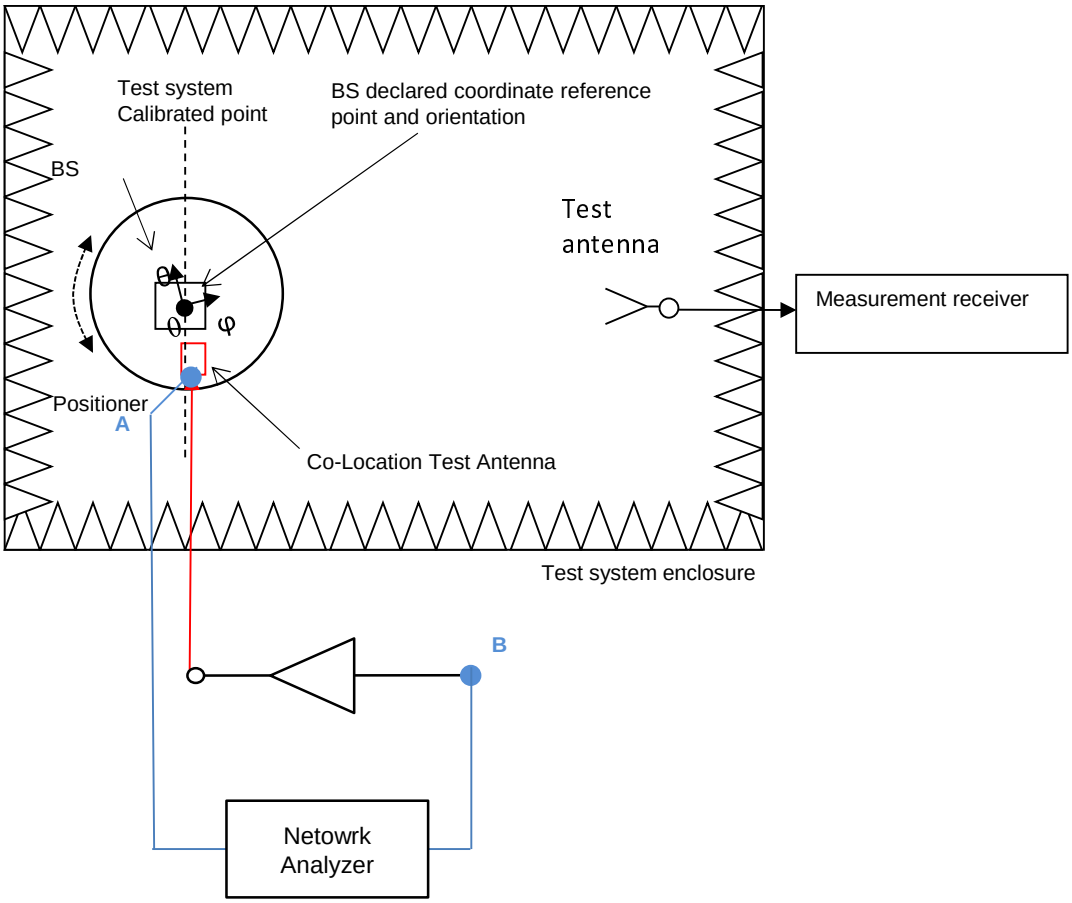

Figure 8.7-2: General chamber test system set up diagram for co-location TX IMD

The CLTA path is calibrated as follows:

1) Cable and matching loss calibration for CLTA for each polarization supported by the CLTA

   a) Measure CLTA reflection coefficient separately at the antenna's connector with a network analyser (or equivalent measurement equipment) to obtain Γ_{ANT}.

   b) Measure cable loss from input of CLTA (A) to point B for TX OFF and co-location spurious emissions and from point B to input of CLTA (A) for TX IMD, call this $L_{ANT \leftrightarrow F}$ which is the equivalent of $20\log|S_{21}|$ from the use of a network analyser.

   c) Calculate the combined total path loss from F to CLTA using the following equation:

$$Lcal = L_{ANT \leftrightarrow F} + 10\log(1 - |\Gamma_{ANT}|^2)$$

8.8 Reverberation chamber calibration

To correctly determine the TRP by the BS a calibration step to account for losses in cables, antennas, etc. is required. A reference PTF is determined at each frequency of interest by using a relevant reference TX antenna (REF TX ant). The chamber should be set up identically to the actual set up of the TRP measurement, which means the BS has to be in the room, the same stirring procedure has to be used, etc.

A minimum N_{ref} = 1 reference measurement is required, but it is noted that more measurements can be used to estimate the reference PTF and that this will lead to a reduction of the uncertainty by a factor $1/\sqrt{N_{ref}}$. The radiation efficiency, η, of the reference antenna can be assumed to be the value declared by the manufacturer or can be determined in a separate antenna efficiency measurement.

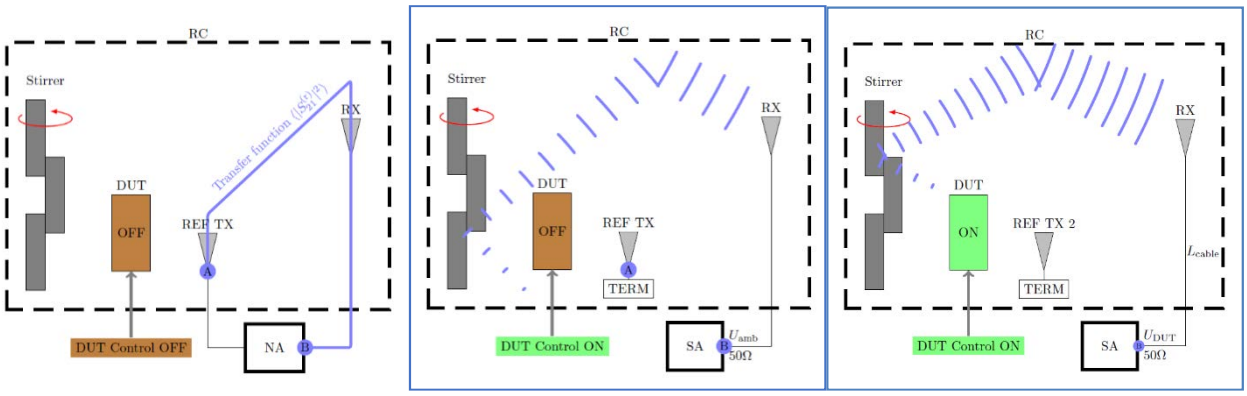

(a) (b) (c)

Figure 8.8-1: The procedure for TRP measurements uses three consecutive setups: (a) Reference measurement, (b) ambient noise measurement (b), and (c) TRP measurement. The blue dots indicate the measurement planes

Calibration procedure:

1) Place the BS and the REF TX ant in the working volume of the RC. Turn off BS power and BS controls. See figure 8.8-1 (a). If more positions are used to determine the reference PTF the REF TX ant should be placed at uncorrelated positions within the test volume.

2) Set the stirrers and turntables in the mode of operation used in the chamber characterization.

3) Set the sampling rate as in the chamber characterization.

4) Connect the REF TX ant and the RX antenna with a calibrated Network analyser (NA).

5) Measure the scattering parameters or received power over a complete stirring cycle for each frequency of interest and for each position and orientation.

6) Calculate the reference transfer function, $P^{(r)}$.

7) Calculate the mis-match efficiency, $M_1^{(r)}$.

9 TX directional requirements

9.1 General

Most TX directional requirements require demodulation of the transmitted signal using the "global in-channel TX test" as described e.g. in annex L of TS 38.141-2 [6] for NR.

For simplicity since L_{path} requirements do not all use the same RAT-specific test models, the OTA test procedures have been kept general by using "applicable test signal" where the RAT-specific test models can be found in AAS BS or NR BS test specifications TS 37.145-2 [4] and TS 38.141-2 [6], respectively.

Some requirements are differential and hence many of the calibration and OTA measurement uncertainties may cancel. These are investigated on a case by case basis.

NOTE 1: All the calibration and test procedures are valid for FR1 as well as FR2, unless otherwise stated.

NOTE 2: All the MU and TT values derivations are valid for Normal test conditions, unless otherwise stated.

NOTE 3: The FR2 MU assessment was carried out using a CATR chamber only however other chamber types are not precluded if suitable MU assessment is done.

9.2 EIRP accuracy, Normal test conditions

9.2.1 General

Clause 9.2 captures MU and TT values derivation for the EIRP accuracy directional requirement in Normal test conditions.

For the MU and TT values derivation for the EIRP accuracy in Extreme test conditions, refer to clause 9.3. Specification of Normal and Extreme test conditions is captured in TS 38.141-2 [6] for NR BS (i.e. *BS type 1-O* and *BS type 2-O*), and in TS 37.145-2 [4] for OTA AAS BS.

9.2.2 Indoor Anechoic Chamber

9.2.2.1 Measurement system description

Measurement system description is captured in clause 7.2.1.

9.2.2.2 Test procedure

9.2.2.2.1 Stage 1: Calibration

Calibration procedure for the Indoor Anechoic Chamber is captured in clause 8.2 with the calibration system setup for TX requirements depicted in figure 8.2-1.

9.2.2.2.2 Stage 2: BS measurement

The IAC testing procedure consists of the following steps:

1) Uninstall the reference antenna and install the BS with the manufacturer declared coordinate system reference point in the same place as the phase centre of the reference antenna. The manufacturer declared coordinate system orientation of the BS is set to be aligned with the testing system.

2) Set the BS to generate the tested beam with the *beam peak direction* intended to be the same as the testing direction.

3) Rotate the BS to make the testing direction aligned with the direction of the receiving antenna.

4) Set the BS to transmit the test signal at the maximum power according to applicable test model.

5) Measure the mean power for each carrier arriving at the measurement equipment connector, denoted by $P_{R\_EIRP,\ D}$, which is defined as measured mean power for each carrier at the measurement equipment connector at the reference point D in figure 7.2.1-1.

6) Calculate the EIRP with the following formula:

$$EIRP = P_{R\_EIRP,\ D} + L_{EIRP\_cal,\ A \rightarrow D}$$

7) Calculate total EIRP = $EIRP_{p1}$ + $EIRP_{p2}$ where the declared beam is the measured signal for any two orthogonal polarizations (denoted p1 and p2).

8) Repeat the above steps 2 - 7 per conformance test *beam direction pair*.

9.2.2.3 MU value derivation, FR1

Table 9.2.2.3-1 captures uncertainty budget contributors and table 9.2.2.3-2 captures the derivation of the expanded measurement uncertainty values for EIRP accuracy measurements in Indoor Anechoic Chamber (Normal test conditions, FR1).

Table 9.2.2.3-1: Indoor Anechoic Chamber measurement uncertainty contributors for EIRP accuracy measurements, Normal test conditions, FR1

UID / Details in annex	Uncertainty source
Stage 2: BS measurement	
A1-1	Positioning misalignment between the BS and the reference antenna
A1-2	Pointing misalignment between the BS and the receiving antenna
A1-3	Quality of quiet zone
A1-4a	Polarization mismatch between the BS and the receiving antenna
A1-5a	Mutual coupling between the BS and the receiving antenna
A1-6	Phase curvature
C1-1	Uncertainty of the RF power measurement equipment (e.g. spectrum analyzer, power meter)
A1-7	Impedance mismatch in the receiving chain
A1-8	Random uncertainty
Stage 1: Calibration measurement	
A1-9	Impedance mismatch between the receiving antenna and the network analyzer
A1-10	Positioning and pointing misalignment between the reference antenna and the receiving antenna
A1-11	Impedance mismatch between the reference antenna and the network analyzer.
A1-3	Quality of quiet zone
A1-4b	Polarization mismatch between the reference antenna and the receiving antenna
A1-5	Mutual coupling between the reference antenna and the receiving antenna
A1-6	Phase curvature
C1-3	Uncertainty of the network analyzer
A1-12	Influence of the reference antenna feed cable
A1-13	Reference antenna feed cable loss measurement uncertainty
A1-14	Influence of the receiving antenna feed cable
C1-4	Uncertainty of the absolute gain of the reference antenna
A1-15	Uncertainty of the absolute gain of the receiving antenna

NOTE: In the legacy technical reports for BS testability (RAN4) or UE testability (RAN5), the MU/TT derivation tables were using UID as counting numbers across multiple test chambers and requirement's clauses. In this TR a simplified approach was taken with the UID's being the annex number of the measurement uncertainty source description.

Table 9.2.2.3-2: Indoor Anechoic Chamber measurement uncertainty value derivation for EIRP accuracy measurements, Normal test conditions, FR1

UID	Uncertainty source	Uncertainty value (dB)			Distribution of the probability	Divisor based on distribution shape	c_i	Standard uncertainty u_i (dB)		
		f < 3 G Hz	3 < f < 4.2 GHz	4.2 < f < 6 GHz				f < 3 G Hz	3 < f < 4.2 GHz	4.2 < f < 6 GHz
Stage 2: BS measurement										
A1-1	Positioning misalignment between the BS and the reference antenna	0.03	0.03	0.03	Rectangular	1.73	1	0.02	0.02	0.02
A1-2	Pointing misalignment between the BS and the receiving antenna	0.3	0.3	0.3	Rectangular	1.73	1	0.17	0.17	0.17
A1-3	Quality of quiet zone	0.1	0.1	0.1	Gaussian	1.00	1	0.10	0.10	0.10
A1-4a	Polarization mismatch between the BS and the receiving antenna	0.01	0.01	0.01	Rectangular	1.73	1	0.01	0.01	0.01
A1-5a	Mutual coupling between the BS and the receiving antenna	0	0	0	Rectangular	1.73	1	0.00	0.00	0.00
A1-6	Phase curvature	0.05	0.05	0.05	Gaussian	1.00	1	0.05	0.05	0.05
C1-1	Uncertainty of the RF power measurement equipment (e.g. spectrum analyzer, power meter)	0.14	0.26	0.26	Gaussian	1.00	1	0.14	0.26	0.26
A1-7	Impedance mismatch in the receiving chain	0.14	0.33	0.33	U-shaped	1.41	1	0.10	0.23	0.23
A1-8	Random uncertainty	0.1	0.1	0.1	Rectangular	1.73	1	0.06	0.06	0.06
Stage 1: Calibration measurement										
A1-9	Impedance mismatch between the receiving antenna and the network analyzer	0.05	0.05	0.05	U-shaped	1.41	1	0.04	0.04	0.04
A1-10	Positioning and pointing misalignment between the reference antenna and the receiving antenna	0.01	0.01	0.01	Rectangular	1.73	1	0.01	0.01	0.01
A1-11	Impedance mismatch between the reference antenna and the network analyzer	0.05	0.05	0.05	U-shaped	1.41	1	0.04	0.04	0.04
A1-3	Quality of quiet zone	0.1	0.1	0.1	Gaussian	1.00	1	0.10	0.10	0.10
A1-4b	Polarization mismatch between the reference antenna and the receiving antenna	0.01	0.01	0.01	Rectangular	1.73	1	0.01	0.01	0.01
A1-5b	Mutual coupling between the reference antenna and the receiving antenna	0	0	0	Rectangular	1.73	1	0.00	0.00	0.00
A1-6	Phase curvature	0.05	0.05	0.05	Gaussian	1.00	1	0.05	0.05	0.05
C1-3	Uncertainty of the network analyzer	0.13	0.2	0.2	Gaussian	1.00	1	0.13	0.20	0.20
A1-12	Influence of the reference antenna feed cable	0.05	0.05	0.05	Rectangular	1.73	1	0.03	0.03	0.03
A1-13	Reference antenna feed cable loss measurement uncertainty	0.06	0.06	0.06	Gaussian	1.00	1	0.06	0.06	0.06
A1-14	Influence of the receiving antenna feed cable	0.05	0.05	0.05	Rectangular	1.73	1	0.03	0.03	0.03
C1-4	Uncertainty of the absolute gain of the reference antenna	0.50	0.43	0.43	Rectangular	1.73	1	0.29	0.25	0.25
A1-15	Uncertainty of the absolute gain of the receiving antenna	0	0	0	Rectangular	1.73	1	0.00	0.00	0.00
Combined standard uncertainty (1σ) (dB)								**0.44**	**0.54**	**0.54**
Expanded uncertainty (1.96σ - confidence interval of 95 %) (dB)								**0.87**	**1.06**	**1.06**

9.2.3 Compact Antenna Test Range

9.2.3.1 Measurement system description

Measurement system description is captured in clause 7.3.1.

9.2.3.2 Test procedure

9.2.3.2.1 Stage 1: Calibration

Calibration procedure for the Compact Antenna Test Range is captured in clause 8.3 with the calibration system setup for TX requirements depicted in figure 8.3-1.

9.2.3.2.2 Stage 2: BS measurement

The CATR testing procedure consists of the following steps:

1) Set up BS in place of SGH from calibration stage. Align BS with *beam peak direction* of range antenna.

2) Configure TX branch and carrier according to maximum power requirement and test configuration.

3) Set the BS to transmit the test signal according to applicable test model.

4) Measure mean power (P_{meas}) of each carrier arriving at the measurement equipment (such as a spectrum analyzer or power meter) denoted in figure 8.3-1.

5) Calculate EIRP, where EIRP = $P_{meas} + L_{A \rightarrow B}$.

6) Calculate total EIRP = $EIRP_{p1} + EIRP_{p2}$ where the declared beam is the measured signal for any two orthogonal polarizations (denoted p1 and p2).

7) Repeat steps 2 - 6 for all conformance test *beam direction pairs*.

9.2.3.3 MU value derivation, FR1

Table 9.2.3.3-1 captures uncertainty budget contributors and Table 9.2.3.3-2 captures the derivation of the expanded measurement uncertainty values for EIRP accuracy measurements in CATR (Normal test conditions, FR1).

Table 9.2.3.3-1: CATR measurement uncertainty contributors for EIRP accuracy measurements, Normal test conditions, FR1

UID / Details in annex	Uncertainty source
Stage 2: BS measurement	
A2-1a	Misalignment and pointing error of BS (for EIRP)
C1-1	Uncertainty of the RF power measurement equipment (e.g. spectrum analyzer, power meter)
A2-2a	Standing wave between BS and test range antenna
A2-3	RF leakage (SGH connector terminated & test range antenna connector cable terminated)
A2-4a	QZ ripple experienced by BS
A2-12	Frequency flatness of test system
Stage 1: Calibration measurement	
C1-3	Uncertainty of the network analyzer
A2-5a	Mismatch of receiver chain between receiving antenna and measurement receiver
A2-6	Insertion loss of receiver chain
A2-3	RF leakage (SGH connector terminated & test range antenna connector cable terminated)
A2-7	Influence of the calibration antenna feed cable
C1-4	Uncertainty of the absolute gain of the reference antenna
A2-8	Misalignment positioning system
A2-1b	Misalignment and pointing error of calibration antenna
A2-9	Rotary joints
A2-2b	Standing wave between calibration antenna and test range antenna

A2-4b	QZ ripple experienced by calibration antenna
A2-11	Switching uncertainty

NOTE: In the legacy technical reports for BS testability (RAN4) or UE testability (RAN5), the MU/TT derivation tables were using UID as counting numbers across multiple test chambers and requirement's clauses. In this TR a simplified approach was taken with the UID's being the annex number of the measurement uncertainty source description.

Table 9.2.3.3-2: CATR MU value derivation for EIRP accuracy measurements, Normal test conditions, FR1

UID	Uncertainty source	Uncertainty value (dB)			Distribution of the probability	Divisor based on distribution shape	c_i	Standard uncertainty u_i (dB)		
		f ≤ 3 GHz	3 < f ≤ 4.2 GHz	4.2 < f ≤ 6 GHz				f ≤ 3 GHz	3 < f ≤ 4.2 GHz	4.2 < f ≤ 6 GHz
Stage 2: BS measurement										
A2-1a	Misalignment and pointing error of BS (for EIRP)	0.00	0.00	0.00	Exp. normal	2.00	1	0.00	0.00	0.00
C1-1	Uncertainty of the RF power measurement equipment (e.g. spectrum analyzer, power meter)	0.14	0.26	0.26	Gaussian	1.00	1	0.14	0.26	0.26
A2-2a	Standing wave between BS and test range antenna	0.21	0.21	0.21	U-shaped	1.41	1	0.15	0.15	0.15
A2-3	RF leakage (SGH connector terminated & test range antenna connector cable terminated)	0.00	0.00	0.00	Gaussian	1.00	1	0.00	0.00	0.00
A2-4a	QZ ripple experienced by BS	0.09	0.09	0.09	Gaussian	1.00	1	0.09	0.09	0.09
A2-12	Frequency flatness of test system	0.25	0.25	0.25	Gaussian	1.00	1	0.25	0.25	0.25
Stage 1: Calibration measurement										
C1-3	Uncertainty of the network analyzer	0.13	0.20	0.20	Gaussian	1.00	1	0.13	0.20	0.20
A2-5a	Mismatch of receiver chain between receiving antenna and measurement receiver	0.13	0.33	0.33	U-shaped	1.41	1	0.09	0.23	0.23
A2-6	Insertion loss of receiver chain	0.18	0.18	0.18	Rectangular	1.73	1	0.10	0.10	0.10
A2-3	RF leakage (SGH connector terminated & test range antenna connector cable terminated)	0.00	0.00	0.00	Gaussian	1.00	1	0.00	0.00	0.00
A2-7	Influence of the calibration antenna feed cable	0.02	0.02	0.02	U-shaped	1.41	1	0.02	0.02	0.02
C1-4	Uncertainty of the absolute gain of the reference antenna	0.50	0.43	0.43	Rectangular	1.73	1	0.29	0.25	0.25
A2-8	Misalignment positioning system	0.00	0.00	0.00	Exp. normal	2.00	1	0.00	0.00	0.00
A2-1b	Misalignment and pointing error of calibration antenna	0.50	0.50	0.50	Exp. normal	2.00	1	0.25	0.25	0.25
A2-9	Rotary joints	0.05	0.05	0.05	U-shaped	1.41	1	0.03	0.03	0.03
A2-2b	Standing wave between calibration antenna and test range antenna	0.09	0.09	0.09	U-shaped	1.41	1	0.06	0.06	0.06
A2-4b	QZ ripple experienced by calibration antenna	0.01	0.01	0.01	Gaussian	1.00	1	0.01	0.01	0.01
A2-11	Switching uncertainty	0.26	0.26	0.26	Rectangular	1.73	1	0.15	0.15	0.15
Combined standard uncertainty (1σ) (dB)								**0.57**	**0.65**	**0.65**
Expanded uncertainty (1.96σ - confidence interval of 95 %) (dB)								**1.11**	**1.27**	**1.27**

9.2.3.4 MU value derivation, FR2

The MU assessment was carried out using a CATR chamber only however other chamber types are not precluded if suitable MU assessment is done.

A CATR MU budget was assessed in order to determine acceptable MU for the EIRP accuracy measurement in FR2. The CATR test setup and calibration and measurement procedures for FR2 are expected to be similar to those of FR1, although the test chamber dimensions and associated MU values will scale due to the shorter wavelengths and larger relative array apertures.

Table 9.2.3.4-1 captures the uncertainty budget contributors and table 9.2.3.4-2 captures the derivation of the expanded measurement uncertainty values for EIRP accuracy measurements in CATR (Normal test conditions, FR2).

Table 9.2.3.4-1: CATR measurement uncertainty contributors for EIRP accuracy measurements, Normal test conditions, FR2

UID / Details in annex	Uncertainty source
Stage 2: BS measurement	
A2-1a	Misalignment and pointing error of BS (for EIRP)
C1-1	Uncertainty of the RF power measurement equipment (e.g. spectrum analyzer, power meter) - high power
A2-2a	Standing wave between BS and test range antenna
A2-3	RF leakage (SGH connector terminated & test range antenna connector cable terminated)
A2-4a	QZ ripple experienced by BS
A2-12	Frequency flatness of test system
Stage 1: Calibration measurement	
C1-3	Uncertainty of the network analyzer
A2-5a	Mismatch of receiver chain between receiving antenna and measurement receiver
A2-6	Insertion loss of receiver chain
A2-3	RF leakage (SGH connector terminated & test range antenna connector cable terminated)
A2-7	Influence of the calibration antenna feed cable
C1-4	Uncertainty of the absolute gain of the reference antenna
A2-8	Misalignment positioning system
A2-1b	Misalignment and pointing error of calibration antenna (for EIRP)
A2-9	Rotary joints
A2-2b	Standing wave between calibration antenna and test range antenna
A2-4b	QZ ripple experienced by calibration antenna
A2-11	Switching uncertainty

NOTE: In the legacy technical reports for BS testability (RAN4) or UE testability (RAN5), the MU/TT derivation tables were using UID as counting numbers across multiple test chambers and requirement's clauses. In this TR a simplified approach was taken with the UID's being the annex number of the measurement uncertainty source description.

Table 9.2.3.4-2: CATR MU value derivation for EIRP accuracy measurements, Normal test conditions, FR2

UID	Uncertainty source	Uncertainty value (dB)		Distribution of the probability	Divisor based on distribution shape	c_i	Standard uncertainty u_i (dB)	
		24.25 < f <29.5 GHz	37 < f <43.5 GHz				24.25 < f <29.5 GHz	37 < f <43.5 GHz
Stage 2: BS measurement								
A2-1a	Misalignment and pointing error of BS (for EIRP)	0.20	0.20	Exp. normal	2.00	1	0.10	0.10
C1-1	Uncertainty of the RF power measurement equipment (e.g. spectrum analyzer, power meter) - high power	0.50	0.70	Normal	1.00	1	0.50	0.70
A2-2a	Standing wave between BS and test range antenna	0.03	0.03	U-shaped	1.41	1	0.02	0.02
A2-3	RF leakage (SGH connector terminated & test range antenna connector cable terminated)	0.01	0.01	Normal	1.00	1	0.01	0.01
A2-4a	QZ ripple experienced by BS	0.40	0.40	Normal	1.00	1	0.40	0.40
A2-12	Frequency flatness of test system	0.25	0.25	Normal	1.00	1	0.25	0.25
Stage 1: Calibration measurement								
C1-3	Uncertainty of the network analyzer	0.30	0.30	Normal	1.00	1	0.30	0.30
A2-5a	Mismatch of receiver chain between receiving antenna and measurement receiver	0.43	0.57	U-shaped	1.41	1	0.30	0.40
A2-6	Insertion loss of receiver chain	0.00	0.00	Rectangular	1.73	1	0.00	0.00
A2-3	RF leakage (SGH connector terminated & test range antenna connector cable terminated)	0.01	0.01	Normal	1.00	1	0.01	0.01
A2-7	Influence of the calibration antenna feed cable	0.21	0.29	U-shaped	1.41	1	0.15	0.21
C1-4	Uncertainty of the absolute gain of the reference antenna	0.52	0.52	Rectangular	1.73	1	0.30	0.30
A2-8	Misalignment positioning system	0.00	0.00	Exp. normal	2.00	1	0.00	0.00
A2-1b	Misalignment and pointing error of calibration antenna (for EIRP)	0.00	0.00	Exp. normal	2.00	1	0.00	0.00
A2-9	Rotary joints	0.00	0.00	U-shaped	1.41	1	0.00	0.00
A2-2b	Standing wave between calibration antenna and test range antenna	0.09	0.09	U-shaped	1.41	1	0.06	0.06
A2-4b	QZ ripple experienced by calibration antenna	0.01	0.01	Normal	1.00	1	0.01	0.01
A2-11	Switching uncertainty	0.10	0.10	Rectangular	1.73	1	0.06	0.06
Combined standard uncertainty (1σ) (dB)							**0.89**	**1.06**
Expanded uncertainty (1.96σ - confidence interval of 95 %) (dB)							**1.74**	**2.07**

9.2.4 One Dimensional Compact Range

9.2.4.1 Measurement system description

Measurement system description is captured in clause 7.4.1.

9.2.4.2 Test procedure

9.2.4.2.1 Stage 1: Calibration

Calibration procedure for the One Dimensional Compact Range is captured in clause 8.4.

9.2.4.2.2 Stage 2: BS measurement

The One Dimensional Compact Range testing procedure consists of the following steps:

1) Connect the receive network of the compact probe to the measurement equipment.

2) Calibrate the test range, using a reference antenna with standard gain installed in the quiet zone of the probe and measure the path loss between reference antenna and the measurement equipment.

3) Install the BS in the quiet zone of the probe with its manufacturer declared coordinate system reference point in the same place as the phase centre of the reference antenna. The manufacturer declared coordinate system orientation of the BS is set to be aligned with testing system.

4) Align with the required conformance steering directions.

5) Set the BS to transmit at maximum EIRP appropriate to conformance steering directions according to the manufacturer declaration.

6) Measure the received power at the probe and thus the EIRP of the BS.

7) Calculate total EIRP = $EIRP_{p1}$ + $EIRP_{p2}$ where the declared beam is the measured signal for any two orthogonal polarizations (denoted p1 and p2).

8) Repeat test steps 2 - 7 for all declared beams and corresponding conformance steering directions.

9.2.4.3 MU value derivation, FR1

Table 9.2.4.3-1 captures the uncertainty budget contributors and table 9.2.4.3-2 captures the derivation of the expanded measurement uncertainty values for EIRP accuracy measurements in One Dimensional Compact Range.

Table 9.2.4.3-1: One Dimensional Compact Range measurement accuracy contributors for EIRP accuracy measurements, FR1

UID / Details in annex	Uncertainty source
Stage 2: BS measurement	
A4-1	Misalignment and pointing error of BS
A4-2a	Standing wave between BS and test range antenna
A4-3a	Quiet zone ripple experienced by BS
A4-4a	Phase curvature across the BS antenna
A4-5a	Polarization mismatch between BS and receiving antenna
A4-6a	Mutual coupling between BS and receiving antenna
C1-1	Uncertainty of the RF power measurement equipment (e.g. spectrum analyzer, power meter)
A4-7	Impedance mismatch in receiving chain
A4-8a	RF leakage (BS connector terminated and test range antenna connector cable terminated)
Stage 1: Calibration measurement	
A4-9	Misalignment positioning system
A4-10	Pointing error between reference antenna and test range antenna
A4-11	Impedance mismatch in path to reference antenna
A4-12	Impedance mismatch in path to compact probe
A4-2b	Standing wave between reference antenna and receiving antenna
A4-3b	Quiet zone ripple experienced by reference antenna
A4-4b	Phase curvature across the reference antenna
A4-5b	Polarization mismatch between reference antenna and receiving antenna
A4-6b	Mutual coupling between reference antenna and receiving antenna
C1-1	Uncertainty of the RF power measurement equipment (e.g. spectrum analyzer, power meter)
A4-13	Influence of the reference antenna feed cable (flexing cables, adapters, attenuators, connector repeatability)
A4-14	Mismatch of receiver chain
A4-15	Insertion loss of receiver chain
C1-4	Uncertainty of the absolute gain of the reference antenna
A4-8b	RF leakage (SGH connector terminated and test range antenna connector cable terminated.

NOTE: In the legacy technical reports for BS testability (RAN4) or UE testability (RAN5), the MU/TT derivation tables were using UID as counting numbers across multiple test chambers and requirement's clauses. In this TR a simplified approach was taken with the UID's being the annex number of the measurement uncertainty source description.

Table 9.2.4.3-2: One Dimensional Compact Range MU value derivation for EIRP accuracy measurements, FR1

UID	Uncertainty source	Uncertainty value (dB)			Distribution of the probability	Divisor based on distribution shape	c_i	Standard uncertainty u_i (dB)		
		f < 3 GHz	3 < f < 4.2 GHz	4.2 < f < 6 GHz				f < 3 GHz	3 < f < 4.2 GHz	4.2 < f < 6 GHz
Stage 2: BS measurement										
A4-1	Misalignment and pointing error of BS	0.00	0.00	0.00	Exp. normal	2.00	1	0.00	0.00	0.00
A4-2a	Standing wave between BS and test range antenna	0.18	0.18	0.18	U-shaped	1.41	1	0.13	0.13	0.13
A4-3a	Quiet zone ripple experienced by BS	0.03	0.03	0.03	Gaussian	1.00	1	0.03	0.03	0.03
A4-4a	Phase curvature across the BS antenna	0.01	0.01	0.01	Gaussian	1.00	1	0.01	0.01	0.01
A4-5a	Polarization mismatch between BS and receiving antenna	0.05	0.05	0.05	Rectangular	1.73	1	0.03	0.03	0.03
A4-6a	Mutual coupling between BS and receiving antenna	0.00	0.00	0.00	Rectangular	1.73	1	0.00	0.00	0.00
C1-1	Uncertainty of the RF power measurement equipment (e.g. spectrum analyzer, power meter)	0.14	0.26	0.26	Gaussian	1.00	1	0.14	0.26	0.26
A4-7	Impedance mismatch in receiving chain	0.01	0.01	0.01	U-shaped	1.41	1	0.00	0.01	0.01
A4-8a	RF leakage (BS connector terminated and test range antenna connector cable terminated)	0.00	0.00	0.00	Gaussian	1.00	1	0.00	0.00	0.00
Stage 1: Calibration measurement										
A4-9	Misalignment positioning system	0.00	0.00	0.00	Exp. normal	2.00	1	0.00	0.00	0.00
A4-10	Pointing error between reference antenna and test range antenna	0.00	0.00	0.00	Rectangular	1.73	1	0.00	0.00	0.00
A4-11	Impedance mismatch in path to reference antenna	0.05	0.05	0.05	U-shaped	1.41	1	0.04	0.04	0.04
A4-12	Impedance mismatch in path to compact probe	0.03	0.03	0.03	U-shaped	1.41	1	0.02	0.02	0.02
A4-2b	Standing wave between reference antenna and receiving antenna	0.09	0.09	0.09	U-shaped	1.41	1	0.06	0.06	0.06
A4-3b	Quiet zone ripple experienced by reference antenna	0.18	0.18	0.18	Gaussian	1.00	1	0.18	0.18	0.18
A4-4b	Phase curvature across the reference antenna	0.00	0.00	0.00	Gaussian	1.00	1	0.00	0.00	0.00
A4-5b	Polarization mismatch between reference antenna and receiving antenna	0.05	0.05	0.05	Rectangular	1.73	1	0.03	0.03	0.03
A4-6b	Mutual coupling between reference antenna and receiving antenna	0.00	0.00	0.00	Rectangular	1.73	1	0.00	0.00	0.00
C1-1	Uncertainty of the RF power measurement equipment (e.g. spectrum analyzer, power meter)	0.14	0.26	0.26	Gaussian	1.00	1	0.14	0.26	0.26
A4-13	Influence of the reference antenna feed cable (flexing cables, adapters, attenuators, connector repeatability)	0.08	0.08	0.08	Rectangular	1.73	1	0.05	0.05	0.05
A4-14	Mismatch of receiver chain	0.20	0.30	0.30	U-shaped	1.41	1	0.14	0.21	0.21
A4-15	Insertion loss of receiver chain	0.18	0.18	0.18	Rectangular	1.73	1	0.10	0.10	0.10
C1-4	Uncertainty of the absolute gain of the reference antenna	0.50	0.43	0.43	Rectangular	1.73	1	0.29	0.25	0.25
A4-8b	RF leakage (SGH connector terminated and test range antenna connector cable terminated.	0.00	0.00	0.00	Gaussian	1.00	1	0.00	0.00	0.00
Combined standard uncertainty (1σ) (dB)								**0.46**	**0.56**	**0.56**
Expanded uncertainty (1.96σ - confidence interval of 95 %) (dB)								**0.90**	**1.10**	**1.10**

9.2.5 Near Field Test Range

9.2.5.1 Measurement system description

Measurement system description is captured in clause 7.5.1.

9.2.5.2 Test procedure

9.2.5.2.1 Stage 1: Calibration

Calibration procedure for the Near Field Test Range is captured in clause 8.5.

9.2.5.2.2 Stage 2: BS measurement

The Near Field Test Range testing procedure consists of the following steps:

1) BS near field *radiation pattern* measurement: this is performed with the BS transmitting a defined modulated signal, as defined in appropriate conformance test specification.

2) BS near field to far field transformation: the near field power calibration is applied.

The near field to far field transformation is a mathematical computation which is applied to the near field measured *radiation pattern* in order to compute the far field *radiation pattern*. It is typically performed expanding the measured near field over a set of orthogonal basis functions. The near to far field transform is then performed in two steps:

1) Expansion (or projection) of the measured near field (i.e. $E_{meas}(r)$) over a set of orthogonal basis functions (i.e. $F_{basis}(r)$) in order to evaluate the transformed spectrum:

$$E_{meas}(r) = \text{Spectrum} * F_{basis}(r)$$

2) FF (i.e. E_{FF}) computation using the previously calculated spectrum and with the basis functions evaluated at $r \rightarrow \infty$ (i.e. $F_{basis}(r \rightarrow \infty)$):

$$E_{FF} = \text{Spectrum} * F_{basis}(r \rightarrow \infty)$$

When performing the near field to far field transformation, the gain calibration is applied so that the near field pattern will be transformed from relative power (i.e. dB) to absolute power (i.e. dBm). In this specific case, the EIRP far field pattern is expressed in terms of the absolute power radiated by the BS in the declared beam:

1) BS radiated transmit power: once the full 3D far field EIRP pattern has been computed, the radiated transmit power can be derived.

9.2.5.3 MU value derivation, FR1

Table 9.2.5.3-1 captures the uncertainty budget contributors and table 9.2.5.3-2 captures the derivation of the expanded measurement uncertainty values for EIRP accuracy measurements in Near Field Test Range.

Standard uncertainty values for the signal generator, network analyzer and reference antenna are according to the test equipment uncertainty values, as captured in annex C.

Table 9.2.5.3-1: NFTR measurement accuracy contributors for EIRP accuracy measurements, FR1

UID / Details in annex	Uncertainty source
Stage 2: BS measurement	
A3-1	Axes intersection
A3-2	Axes orthogonality
A3-3	Horizontal pointing
A3-4	Probe vertical position
A3-5	Probe horizontal/vertical pointing
A3-6	Measurement distance
A3-7	Amplitude and phase drift
A3-8	Amplitude and phase noise
A3-9	Leakage and crosstalk
A3-10	Amplitude non-linearity

A3-11	Amplitude and phase shift in rotary joints
A3-12	Channel balance amplitude and phase
A3-13	Probe polarization amplitude and phase
A3-14	Probe pattern knowledge
A3-15	Multiple Reflections
A3-16	Room scattering
A3-17	BS support scattering
A3-18	Scan area truncation
A3-19	Sampling point offset
A3-20	Spherical mode truncation
A3-21	Positioning
A3-22	Probe array uniformity
A3-23	Mismatch of receiver chain
A3-24	Insertion loss of receiver chain
A3-25	Uncertainty of the absolute gain of the probe antenna
C1-1	Uncertainty of the RF power measurement equipment (e.g. spectrum analyzer, power meter)
A3-26	Measurement repeatability - positioning repeatability
A3-33	Frequency flatness of test system
Stage 1: Calibration measurement	
C1-3	Uncertainty of the network analyzer
A3-27	Mismatch of receiver chain
A3-28	Insertion loss of receiver chain
A3-29	Mismatch in the connection of the calibration antenna
A3-30	Influence of the calibration antenna feed cable
A3-31	Influence of the probe antenna cable
C1-4	Uncertainty of the absolute gain of the reference antenna
A3-32	Short term repeatability

NOTE: In the legacy technical reports for BS testability (RAN4) or UE testability (RAN5), the MU/TT derivation tables were using UID as counting numbers across multiple test chambers and requirement's clauses. In this TR a simplified approach was taken with the UID's being the annex number of the measurement uncertainty source description.

Table 9.2.5.3-2: NFTR measurement uncertainty value derivation for EIRP accuracy measurements, FR1

UID	Uncertainty source	Uncertainty value (dB)			Distribution of the probability	Divisor based on distribution shape	c_i	Standard uncertainty u_i (dB)		
		f < 3 GHz	3 < f < 4.2 GHz	4.2 < f < 6 GHz				f < 3 GHz	3 < f < 4.2 GHz	4.2 < f < 6 GHz
Stage 2: BS measurement										
A3-1	Axes intersection	0.00	0.00	0.00	Gaussian	1.00	1	0.00	0.00	0.00
A3-2	Axes orthogonality	0.00	0.00	0.00	Gaussian	1.00	1	0.00	0.00	0.00
A3-3	Horizontal pointing	0.00	0.00	0.00	Gaussian	1.00	1	0.00	0.00	0.00
A3-4	Probe vertical position	0.00	0.00	0.00	Gaussian	1.00	1	0.00	0.00	0.00
A3-5	Probe horizontal/vertical pointing	0.00	0.00	0.00	Gaussian	1.00	1	0.00	0.00	0.00
A3-6	Measurement distance	0.00	0.00	0.00	Gaussian	1.00	1	0.00	0.00	0.00
A3-7	Amplitude and phase drift	0.00	0.00	0.00	Gaussian	1.00	1	0.00	0.00	0.00
A3-8	Amplitude and phase noise	0.02	0.02	0.02	Gaussian	1.00	1	0.02	0.02	0.02
A3-9	Leakage and crosstalk	0.00	0.00	0.00	Gaussian	1.00	1	0.00	0.00	0.00
A3-10	Amplitude non-linearity	0.04	0.04	0.04	Gaussian	1.00	1	0.04	0.04	0.04
A3-11	Amplitude and phase shift in rotary joints	0.00	0.00	0.00	Gaussian	1.00	1	0.00	0.00	0.00
A3-12	Channel balance amplitude and phase	0.00	0.00	0.00	Gaussian	1.00	1	0.00	0.00	0.00
A3-13	Probe polarization amplitude and phase	0.00	0.00	0.00	Gaussian	1.00	1	0.00	0.00	0.00
A3-14	Probe pattern knowledge	0.00	0.00	0.00	Gaussian	1.00	1	0.00	0.00	0.00
A3-15	Multiple reflections	0.00	0.00	0.00	Gaussian	1.00	1	0.00	0.00	0.00
A3-16	Room scattering	0.09	0.09	0.09	Gaussian	1.00	1	0.09	0.09	0.09
A3-17	BS support scattering	0.00	0.00	0.00	Gaussian	1.00	1	0.00	0.00	0.00
A3-18	Scan area truncation	0.00	0.00	0.00	Gaussian	1.00	1	0.00	0.00	0.00
A3-19	Sampling point offset	0.01	0.01	0.01	Gaussian	1.00	1	0.01	0.01	0.01
A3-20	Spherical mode truncation	0.02	0.02	0.02	Gaussian	1.00	1	0.02	0.02	0.02
A3-21	Positioning	0.03	0.03	0.03	Rectangular	1.73	1	0.02	0.02	0.02
A3-22	Probe array uniformity	0.06	0.06	0.06	Gaussian	1.00	1	0.06	0.06	0.06
A3-23	Mismatch of receiver chain	0.28	0.28	0.28	U-Shaped	1.41	1	0.20	0.20	0.20
A3-24	Insertion loss of receiver chain	0.00	0.00	0.00	Gaussian	1.00	1	0.00	0.00	0.00
A3-25	Uncertainty of the absolute gain of the probe antenna	0.00	0.00	0.00	Gaussian	1.00	1	0.00	0.00	0.00
C1-1	Uncertainty of the RF power measurement equipment (e.g. spectrum analyzer, power meter)	0.14	0.26	0.26	Gaussian	1.00	1	0.14	0.26	0.26
A3-26	Measurement repeatability - positioning repeatability	0.15	0.15	0.15	Gaussian	1.00	1	0.15	0.15	0.15
A3-33	Frequency flatness of test system	0.25	0.25	0.25	Normal	1.00	1	0.25	0.25	0.25
Stage 1: Calibration measurement										
C1-3	Uncertainty of the network analyzer	0.13	0.20	0.20	Gaussian	1.00	1	0.13	0.20	0.20
A3-27	Mismatch of receiver chain	0.00	0.00	0.00	Gaussian	1.00	1	0.00	0.00	0.00
A3-28	Insertion loss of receiver chain	0.00	0.00	0.00	Gaussian	1.00	1	0.00	0.00	0.00
A3-29	Mismatch in the connection of the calibration antenna	0.02	0.02	0.02	U-Shaped	1.41	1	0.01	0.01	0.01
A3-30	Influence of the calibration antenna feed cable	0.00	0.00	0.00	Gaussian	1.00	1	0.00	0.00	0.00
A3-31	Influence of the probe antenna cable	0.00	0.00	0.00	Gaussian	1.00	1	0.00	0.00	0.00
C1-4	Uncertainty of the absolute gain of the reference antenna	0.50	0.43	0.43	Rectangular	1.73	1	0.29	0.25	0.25
A3-32	Short term repeatability	0.09	0.09	0.09	Gaussian	1.00	1	0.09	0.09	0.09
Combined standard uncertainty (1σ) (dB)								**0.52**	**0.56**	**0.56**
Expanded uncertainty (1.96σ - confidence interval of 95 %) (dB)								**1.01**	**1.10**	**1.10**

9.2.6 Plane Wave Synthesizer

9.2.6.1 Measurement system description

Measurement system description is captured in clause 7.6.1.

9.2.6.2 Test procedure

9.2.6.2.1 Stage 1: Calibration

Calibration procedure for the Plane Wave Synthesizer is captured in clause 8.6 with the calibration system setup for TX requirements depicted in figure 8.6-1.

9.2.6.2.2 Stage 2: BS measurement

The PWS testing procedure consists of the following steps:

1) Install the BS with the manufacturer declared coordinate system reference point in the same place as the phase center of the reference antenna A as shown in figure 7.6.1-1. The manufacturer declared coordinate system orientation of the BS is set to be aligned with the testing system.

2) Set the BS to generate the tested beam with the applicable test model with the *beam peak direction* intended to be the same as the testing direction.

3) Measure mean power (P_{meas}) at the measurement equipment (such as a spectrum analyzer or power meter) denoted in figure 7.6.1-1.

4) Calculate EIRP, where EIRP = $P_{meas} + L_{C \rightarrow A}$.

5) Calculate total EIRP = $EIRP_{p1} + EIRP_{p2}$ where the declared beam is the measured signal for any two orthogonal polarizations (denoted p1 and p2).

6) Repeat steps 2 - 5 for all conformance test *beam direction pairs* and test conditions.

9.2.6.3 MU value derivation, FR1

Table 9.2.6.3-1 captures the uncertainty budget contributors and table 9.2.6.3-2 captures the derivation of the expanded measurement uncertainty values for EIRP accuracy measurements in PWS.

Table 9.2.6.3-1: PWS measurement accuracy contributors for EIRP accuracy measurements, FR1

UID / Details in annex	Uncertainty source
Stage 2: BS measurement	
A7-1a	Misalignment and pointing error of BS
C1-1	Uncertainty of the RF power measurement equipment (e.g. spectrum analyzer, power meter)
A7-2a	Longitudinal position uncertainty (i.e. standing wave and imperfect field synthesis) for BS antenna
A7-3	RF leakage (calibration antenna connector terminated)
A7-4a	QZ ripple experienced by BS
A7-5	Miscellaneous uncertainty
A7-14	System non-linearity
A7-13	Frequency flatness of test system
Stage 1: Calibration measurement	
C1-3	Uncertainty of the network analyzer
A7-6	Mismatch (i.e. reference antenna, network analyser and reference cable)
A7-7	Insertion loss of receiver chain
A7-3	RF leakage (calibration antenna connector terminated)
A7-8	Influence of the calibration antenna feed cable
C1-4	Uncertainty of the absolute gain of the reference antenna
A7-9	Misalignment of positioning system
A7-1b	Misalignment and pointing error of calibration antenna
A7-10	Rotary joints
A7-2b	Longitudinal position uncertainty (i.e. standing wave and imperfect field synthesis) for calibration antenna
A7-4b	QZ ripple experienced by calibration antenna
A7-11	Switching uncertainty
A7-12	Field repeatability

NOTE: In the legacy technical reports for BS testability (RAN4) or UE testability (RAN5), the MU/TT derivation tables were using UID as counting numbers across multiple test chambers and requirement's clauses. In this TR a simplified approach was taken with the UID's being the annex number of the measurement uncertainty source description.

Table 9.2.6.3-2: PWS measurement uncertainty value derivation for EIRP accuracy measurements, FR1

UID	Uncertainty source	Uncertainty value (dB)			Distribution of the probability	Divisor based on distribution shape	c_i	Standard uncertainty u_i (dB)		
		f < 3 G Hz	3 < f < 4.2 GHz	4.2 < f < 6 G Hz				f < 3 G Hz	3 < f < 4.2 G Hz	4.2 < f < 6 G Hz
Stage 2: BS measurement										
A7-1a	Misalignment and pointing error of BS	0.10	0.10	0.10	Rectangular	1.73	1	0.06	0.06	0.06
C1-1	Uncertainty of the RF power measurement equipment (e.g. spectrum analyzer, power meter)	0.14	0.26	0.26	Gaussian	1.00	1	0.14	0.26	0.26
A7-2a	Longitudinal position uncertainty (i.e. standing wave and imperfect field synthesis) for BS antenna	0.05	0.14	0.20	Rectangular	1.73	1	0.03	0.08	0.12
A7-3	RF leakage (calibration antenna connector terminated)	0.09	0.09	0.09	Normal	1.00	1	0.09	0.09	0.09
A7-4a	QZ ripple experienced by BS	0.42	0.43	0.57	Rectangular	1.73	1	0.24	0.25	0.33
A7-5	Miscellaneous uncertainty	0.00	0.00	0.00	Normal	1.00	1	0.00	0.00	0.00
A7-14	System non-linearity	0.10	0.10	0.15	Rectangular	1.73	1	0.06	0.06	0.09
A7-13	Frequency flatness of test system	0.13	0.13	0.13	Rectangular	1.73	1	0.08	0.08	0.08
Stage 1: Calibration measurement										
C1-3	Uncertainty of the network analyzer	0.13	0.20	0.20	Gaussian	1.00	1	0.13	0.20	0.20
A7-6	Mismatch (i.e. reference antenna, network analyzer and reference cable)	0.13	0.33	0.33	U-shaped	1.41	1	0.09	0.23	0.23
A7-7	Insertion loss of receiver chain	0.18	0.18	0.18	Rectangular	1.73	1	0.10	0.10	0.10
A7-3	RF leakage (calibration antenna connector terminated)	0.09	0.09	0.09	Normal	1.00	1	0.09	0.09	0.09
A7-8	Influence of the calibration antenna feed cable	0.10	0.10	0.10	Rectangular	1.73	1	0.06	0.06	0.06
C1-4	Uncertainty of the absolute gain of the reference antenna	0.50	0.43	0.43	Rectangular	1.73	1	0.29	0.25	0.25
A7-9	Misalignment of positioning system	0.00	0.00	0.00	Exp. normal	2.00	1	0.00	0.00	0.00
A7-1b	Misalignment and pointing error of calibration antenna	0.05	0.05	0.05	Rectangular	1.73	1	0.03	0.03	0.03
A7-10	Rotary joints	0.00	0.00	0.00	U-shaped	1.73	1	0.00	0.00	0.00
A7-2b	Longitudinal position uncertainty (i.e. standing wave and imperfect field synthesis) for calibration antenna	0.12	0.12	0.15	Rectangular	1.73	1	0.07	0.07	0.09
A7-4b	QZ ripple experienced by calibration antenna	0.20	0.20	0.20	Rectangular	1.73	1	0.12	0.12	0.12
A7-11	Switching uncertainty	0.02	0.02	0.02	Rectangular	1.73	1	0.01	0.01	0.01
A7-12	Field repeatability	0.06	0.12	0.15	Normal	1.00	1	0.06	0.12	0.15
Combined standard uncertainty (1σ) (dB)								**0.50**	**0.61**	**0.66**
Expanded uncertainty (1.96σ - confidence interval of 95 %) (dB)								**0.98**	**1.19**	**1.29**

9.2.7 Maximum accepted test system uncertainty

Maximum test system uncertainties derivation methodology was described in clause 5.1. The maximum accepted test system uncertainty values was derived based on test system specific values.

According to the methodology referred above, the common maximum accepted test system uncertainty values for the EIRP accuracy test can be derived from values captured in table 9.2.7-1, separately for each of the defined frequency ranges. The common maximum accepted test system uncertainty values are applicable for all test methods addressing

EIRP accuracy test requirement in Normal test conditions. Based on input values in table 9.2.7-1, the expanded uncertainty u_e (1.96σ - confidence interval of 95 %) values were derived for frequency ranges as below:

- For the frequency range up to 4.2 GHz (with the breakdown point at 3 GHz), the same MU values as for E-UTRA in TS 37.145-2 [4] were adopted also for NR operation below 4.2 GHz. It is expected that the test chamber setup, calibration and measurement procedures for E-UTRA and NR will be highly similar. All uncertainty factors were judged to be the same. The MU value was thus agreed to be 1.1 dB for up to 3 GHz bands.

- For the frequency range 4.2 - 6 GHz, all MU factors including instrumentation related MU were judged to be the same as for the 3 - 4.2 GHz range, and thus the total MU for 4.2 – 6 GHz is the same as for 3 - 4.2 GHz. This assessment was made under the assumption of testing BS designed for licensed spectrum; for unlicensed spectrum the MU may differ. The MU value was thus agreed to be 1.3 dB for 3 – 6 GHz bands. The MU in 4.2 - 6 GHz is valid for BS designed to operate in licensed spectrum.

- Based on CATR inputs in clause 9.2.3.4, for the frequency range 24.25 < f < 29.5 GHz the MU was decided to be 1.7 dB.

- Based on CATR inputs in clause 9.2.3.4, for the frequency range 37 < f < 43.5 GHz the MU was decided to be 2.0 dB.

Table 9.2.7-1: OTA test system specific measurement uncertainty values for the EIRP accuracy, FR1, Normal test conditions

	Expanded uncertainty (dB)		
	f < 3 GHz	**3 < f < 4.2 GHz**	**4.2 < f < 6 GHz**
Indoor Anechoic Chamber	0.87	1.06	1.06
Compact Antenna Test Range	1.11	1.27	1.27
One Dimensional Compact Range Chamber	0.90	1.10	1.10
Near Field Test Range	1.01	1.10	1.10
Plane Wave Synthesizer	0.98	1.19	1.29
Common maximum accepted test system uncertainty	**1.10**	**1.30**	**1.30**

Table 9.2.7-2: OTA test system specific measurement uncertainty values for the EIRP accuracy, FR2, Normal test conditions

	Expanded uncertainty (dB)		
	24.25 < f < 29.5 GHz	**37 < f < 43.5 GHz**	**43.5 < f < 48.2 GHz**
Indoor Anechoic Chamber	-	-	-
Compact Antenna Test Range	1.74	2.07	-
One Dimensional Compact Range Chamber	-	-	-
Near Field Test Range	-	-	-
Plane Wave Synthesizer	-	-	-
Common maximum accepted test system uncertainty	**1.70**	**2.00**	**2.2 (NOTE)**
NOTE: MU estimation for 43.5 < f < 48.2 GHz was derived based on the linear approximation (based on MU values for lower frequency ranges). MU extrapolation approach was used instead of the typical derivation of the Expanded MU based on the MU budget calculations, as in case of lower frequency ranges.			

An overview of the MU values for all the requirements is captured in clause 17.

9.2.8 Test Tolerance for EIRP accuracy, Normal test conditions

Considering the methodology described in clause 5.1, Test Tolerance values for EIRP were derived based on values captured in clause 9.2.7.

The TT was decided to be the same as the MU for EIRP accuracy in FR1.

The TT was decided to be the same as the MU for EIRP accuracy in FR2.

Frequency range specific Test Tolerance values for the EIRP accuracy test are defined in table 9.2.8-1.

Table 9.2.8-1: Test Tolerance values for the EIRP accuracy in Normal test conditions, FR1

	f ≤ 3 GHz	**3 GHz < f ≤ 4.2 GHz**	**4.2 < f < 6 GHz**
Test Tolerance (dB)	1.1	1.3	1.3

Table 9.2.8-2: Test Tolerance values for the EIRP accuracy in Normal test conditions, FR2

	24.25 < f < 29.5 GHz	**37 < f < 43.5 GHz**	**43.5 < f < 48.2 GHz**
Test Tolerance (dB)	1.7	2.0	2.2

An overview of the TT values for all the requirements is captured in clause 18.

9.3 EIRP accuracy, Extreme test conditions

9.3.1 General

Clause 9.3 captures MU and TT values derivation for the EIRP accuracy directional requirement in Extreme test conditions.

For the MU and TT values derivation for the EIRP accuracy in Normal test conditions, refer to clause 9.2. Specification of Normal and Extreme test conditions is captured in TS 38.141-2 [6] for NR BS (i.e. *BS type 1-O* and *BS type 2-O*), and in TS 37.145-2 [4] for OTA AAS BS.

9.3.2 Indoor Anechoic Chamber

9.3.2.1 Measurement system description

Measurement system description is captured in clause 7.2.2.

9.3.2.2 Test procedure

9.3.2.2.1 Stage 1: Calibration

Calibration shall be done with the same procedure as in clause 8.2 (i.e. EIRP accuracy calibration procedure for Normal test conditions) to ensure that the SNR at the measurement equipment input is appropriate for the measurement of the requirement and the reception signal level at the measurement equipment is within the dynamic range of measurement equipment.

9.3.2.2.2 Stage 2: BS measurement

Reference IAC testing procedure in clause 9.2.2.2.2 (i.e. EIRP accuracy measurement procedure for Normal test conditions).

9.3.2.3 MU value derivation, FR1

Table 9.3.2.3-1: Indoor Anechoic Chamber measurement uncertainty value derivation for EIRP accuracy measurements in Extreme test conditions, FR1

UID	Uncertainty source	Uncertainty value (dB)			Distribution of the probability	Divisor based on distribution shape	c_i	Standard uncertainty u_i (dB)		
		f ≤ 3 GHz	3 < f ≤ 4.2 GHz	4.2 < f ≤ 6 GHz				f ≤ 3 GHz	3 < f ≤ 4.2 GHz	4.2 < f ≤ 6 GHz
Stage 2: BS measurement										
A1-1	Positioning misalignment between the BS and the reference antenna	0.03	0.03	0.03	Rectangular	1.73	1	0.02	0.02	0.02
A1-2	Pointing misalignment between the BS and the receiving antenna	0.30	0.30	0.30	Rectangular	1.73	1	0.17	0.17	0.17
A1-17	Quality of quiet zone (extreme test conditions)	0.60	0.60	0.60	Gaussian	1.00	1	0.60	0.60	0.60
A1-4a	Polarization mismatch between the BS and the receiving antenna	0.01	0.01	0.01	Rectangular	1.73	1	0.01	0.01	0.01
A1-5a	Mutual coupling between the BS and the receiving antenna	0.00	0.00	0.00	Rectangular	1.73	1	0.00	0.00	0.00
A1-6	Phase curvature	0.05	0.05	0.05	Gaussian	1.00	1	0.05	0.05	0.05
C1-1	Uncertainty of the RF power measurement equipment (e.g. spectrum analyzer, power meter)	0.14	0.26	0.26	Gaussian	1.00	1	0.14	0.26	0.26
A1-7	Impedance mismatch in the receiving chain	0.14	0.33	0.33	U-shaped	1.41	1	0.10	0.23	0.23
A1-8	Random uncertainty	0.10	0.10	0.10	Rectangular	1.73	1	0.06	0.06	0.06
A1-19	Radome loss variation	0.40	0.40	0.40	Rectangular	1.73	1	0.23	0.23	0.23
A1-18	Wet radome loss variation	0.95	0.95	0.95	Gaussian	1.00	1	0.95	0.95	0.95
A1-20	Change in absorber behavior	0.10	0.10	0.10	Gaussian	1.00	1	0.10	0.10	0.10
A1-16	Frequency flatness of test system	0.25	0.25	0.25	Gaussian	1.00	1	0.25	0.25	0.25
Stage 1: Calibration measurement										
A1-9	Impedance mismatch between the receiving antenna and the network analyzer	0.05	0.05	0.05	U-shaped	1.41	1	0.04	0.04	0.04
A1-10	Positioning and pointing misalignment between the reference antenna and the receiving antenna	0.01	0.01	0.01	Rectangular	1.73	1	0.01	0.01	0.01
A1-11	Impedance mismatch between the reference antenna and the network analyzer.	0.05	0.05	0.05	U-shaped	1.41	1	0.04	0.04	0.04
A1-3	Quality of quiet zone (normal test conditions)	0.10	0.10	0.10	Gaussian	1.00	1	0.10	0.10	0.10
A1-4b	Polarization mismatch between the reference antenna and the receiving antenna	0.01	0.01	0.01	Rectangular	1.73	1	0.01	0.01	0.01
A1-5b	Mutual coupling between the reference antenna and the receiving antenna	0.00	0.00	0.00	Rectangular	1.73	1	0.00	0.00	0.00
A1-6	Phase curvature	0.05	0.05	0.05	Gaussian	1.00	1	0.05	0.05	0.05
C1-3	Uncertainty of the network analyzer	0.13	0.20	0.20	Gaussian	1.00	1	0.13	0.20	0.20
A1-12	Influence of the reference antenna feed cable	0.05	0.05	0.05	Rectangular	1.73	1	0.03	0.03	0.03
A1-13	Reference antenna feed cable loss measurement uncertainty	0.06	0.06	0.06	Gaussian	1.00	1	0.06	0.06	0.06
A1-14	Influence of the receiving antenna feed cable	0.05	0.05	0.05	Rectangular	1.73	1	0.03	0.03	0.03
C1-4	Uncertainty of the absolute gain of the reference antenna	0.50	0.43	0.43	Rectangular	1.73	1	0.29	0.25	0.25
A1-15	Uncertainty of the absolute gain of the receiving antenna	0.00	0.00	0.00	Rectangular	1.73	1	0.00	0.00	0.00
Combined standard uncertainty (1σ) (dB)								**1.26**	**1.29**	**1.29**
Expanded uncertainty (1.96σ - confidence interval of 95 %) (dB)								**2.46**	**2.53**	**2.53**

9.3.3 Compact Antenna Test Range

9.3.3.1 Measurement system description

Measurement system description for the CATR measurement in the Extreme test environment is captured in clause 7.3.2.

9.3.3.2 Test procedure

9.3.3.2.1 Stage 1: Calibration

The CATR calibration for FR2 are expected to be similar to those of FR1, although the test chamber dimensions and associated MU values will scale due to the shorter wavelengths and larger relative array apertures.

Calibration shall be done with the same procedure shown in clause 9.2.3.2.1 (i.e. EIRP accuracy calibration procedure for Normal test conditions) to ensure that the SNR at the measurement equipment input is appropriate for the measurement of the requirement and the reception signal level at the measurement equipment is within the dynamic range of measurement equipment.

9.3.3.2.2 Stage 2: BS measurement

The CATR test setup and measurement procedures for FR2 are expected to be similar to those of FR1, although the test chamber dimensions and associated MU values will scale due to the shorter wavelengths and larger relative array apertures.

Reference procedure in clause 9.2.3.2.2 (i.e. EIRP accuracy measurement procedure for Normal test conditions).

9.3.3.3 MU value derivation, FR1

Table 9.3.3.3-1: CATR MU value derivation for EIRP accuracy measurements in Extreme test conditions

UID	Uncertainty source	Uncertainty value (dB)			Distribution of the probability	Divisor based on distribution shape	c_i	Standard uncertainty u_i (dB)		
		f ≤ 3 GHz	3 < f ≤ 4.2 GHz	4.2 < f ≤ 6 GHz				f ≤ 3 GHz	3 < f ≤ 4.2 GHz	4.2 < f ≤ 6 GHz
Stage 2: BS measurement										
A2-1a	Misalignment and pointing error of BS (for EIRP)	0.00	0.00	0.00	Exp. normal	2.00	1	0.00	0.00	0.00
C1-1	Uncertainty of the RF power measurement equipment (e.g. spectrum analyzer, power meter)	0.14	0.26	0.26	Gaussian	1.00	1	0.14	0.26	0.26
A2-2a	Standing wave between BS and test range antenna	0.21	0.21	0.21	U-shaped	1.41	1	0.15	0.15	0.15
A2-3	RF leakage (SGH connector terminated & test range antenna connector cable terminated)	0.00	0.00	0.00	Gaussian	1.00	1	0.00	0.00	0.00
A2-13	Quality of quiet zone (extreme test conditions)	0.60	0.60	0.60	Gaussian	1.00	1	0.60	0.60	0.60
A2-12	Frequency flatness of test system	0.25	0.25	0.25	Gaussian	1.00	1	0.25	0.25	0.25
A2-14	Wet radome loss variation	0.40	0.40	0.40	Rectangular	1.73	1	0.23	0.23	0.23
A2-15	Radome loss variation	0.95	0.95	0.95	Gaussian	1.00	1	0.95	0.95	0.95
A2-16	Change in absorber behavior	0.10	0.10	0.10	Gaussian	1.00	1	0.10	0.10	0.10
Stage 1: Calibration measurement										
C1-3	Uncertainty of the network analyzer	0.13	0.20	0.20	Gaussian	1.00	1	0.13	0.20	0.00
A2-5a	Mismatch of receiver chain between receiving antenna and measurement receiver	0.13	0.33	0.33	U-shaped	1.41	1	0.09	0.23	0.23
A2-6	Insertion loss of receiver chain	0.18	0.18	0.18	Rectangular	1.73	1	0.10	0.10	0.10
A2-3	RF leakage (SGH connector terminated & test range antenna connector cable terminated)	0.00	0.00	0.00	Gaussian	1.00	1	0.00	0.00	0.00
A2-7	Influence of the calibration antenna feed cable	0.02	0.02	0.02	U-shaped	1.41	1	0.02	0.02	0.02
C1-4	Uncertainty of the absolute gain of the reference antenna	0.50	0.43	0.43	Rectangular	1.73	1	0.29	0.25	0.25
A2-8	Misalignment positioning system	0.00	0.00	0.00	Exp. normal	2.00	1	0.00	0.00	0.00
A2-1b	Misalignment and pointing error of calibration antenna (for EIRP)	0.50	0.50	0.50	Exp. normal	2.00	1	0.25	0.25	0.25
A2-9	Rotary joints	0.05	0.05	0.05	U-shaped	1.41	1	0.03	0.03	0.03
A2-2b	Standing wave between calibration antenna and test range antenna	0.09	0.09	0.09	U-shaped	1.41	1	0.06	0.06	0.06
A2-4b	QZ ripple experienced by calibration antenna (normal test conditions)	0.01	0.01	0.01	Gaussian	1.00	1	0.01	0.01	0.01
A2-11	Switching uncertainty	0.26	0.26	0.26	Rectangular	1.73	1	0.15	0.15	0.15
Combined standard uncertainty (1σ) (dB)								**1.28**	**1.32**	**1.30**
Expanded uncertainty (1.96σ - confidence interval of 95 %) (dB)								**2.51**	**2.58**	**2.55**

9.3.3.4 MU value derivation, FR2

Table 9.3.3.4-1: CATR MU value derivation for EIRP accuracy measurements in Extreme test conditions, FR2

UID	Uncertainty source	Uncertainty value (dB)		Distribution of the probability	Divisor based on distribution shape	c_i	Standard uncertainty u_i (dB)	
		24.25 < f ≤ 29.5 GHz	37 < f ≤ 43.5 GHz				24.25 < f ≤ 29.5 GHz	37 < f ≤ 43.5 GHz
Stage 2: BS measurement								
A2-1a	Misalignment and pointing error of BS (for EIRP)	0.20	0.20	Exp. normal	2.00	1	0.10	0.10
C1-1	Uncertainty of the RF power measurement equipment (e.g. spectrum analyzer, power meter) - high power	0.50	0.70	Gaussian	1.00	1	0.50	0.70
A2-2a	Standing wave between BS and test range antenna	0.03	0.03	U-shaped	1.41	1	0.02	0.02
A2-3	RF leakage (SGH connector terminated & test range antenna connector cable terminated)	0.01	0.01	Gaussian	1.00	1	0.01	0.01
A2-13	QZ ripple with BS (extreme test conditions)	0.70	0.70	Gaussian	1.00	1	0.70	0.70
A2-12	Frequency flatness of test system	0.25	0.25	Gaussian	1.00	1	0.25	0.25
A2-15	Radome loss variation	0.50	0.50	Gaussian	1.00	1	0.50	0.50
A2-14	Wet radome loss variation	0.90	0.90	Gaussian	1.00	1	0.90	0.90
A2-16	Change in absorber behavior	0.50	0.50	Gaussian	1.00	1	0.50	0.50
Stage 1: Calibration measurement								
C1-3	Uncertainty of the network analyzer	0.30	0.30	Gaussian	1.00	1	0.30	0.30
A2-5a	Mismatch of receiver chain between receiving antenna and measurement receiver	0.43	0.57	U-shaped	1.41	1	0.30	0.40
A2-6	Insertion loss of receiver chain	0.00	0.00	Rectangular	1.73	1	0.00	0.00
A2-3	RF leakage (SGH connector terminated & test range antenna connector cable terminated)	0.01	0.01	Gaussian	1.00	1	0.01	0.01
A2-7	Influence of the calibration antenna feed cable	0.21	0.29	U-shaped	1.41	1	0.15	0.21
C1-4	Uncertainty of the absolute gain of the reference antenna	0.52	0.52	Rectangular	1.73	1	0.30	0.30
A2-8	Misalignment positioning system	0.00	0.00	Exp. normal	2.00	1	0.00	0.00
A2-1b	Misalignment and pointing error of calibration antenna (for EIRP)	0.00	0.00	Exp. normal	2.00	1	0.00	0.00
A2-9	Rotary joints	0.00	0.00	U-shaped	1.41	1	0.00	0.00
A2-2b	Standing wave between calibration antenna and test range antenna	0.09	0.09	U-shaped	1.41	1	0.06	0.06
A2-4b	QZ ripple experienced by calibration antenna (normal test conditions)	0.01	0.01	Gaussian	1.00	1	0.01	0.01
A2-11	Switching uncertainty	0.10	0.10	Rectangular	1.73	1	0.06	0.06
Combined standard uncertainty (1σ) (dB)							**1.56**	**1.66**
Expanded uncertainty (1.96σ - confidence interval of 95 %) (dB)							**3.05**	**3.25**

9.3.4 Maximum accepted test system uncertainty

For the frequency range up to 4.2 GHz, the same MU values as for E-UTRA in TS 37.145-2 [4] were adopted. It is expected that the test chamber setup, calibration and measurement procedures for E-UTRA and NR will be highly similar. All uncertainty factors were judged to be the same.

For the frequency range 4.2 - 6 GHz, all MU factors, including instrumentation related MU were judged to be the same as for the 3 - 4.2 GHz range, and thus the total MU for 4.2 – 6 GHz is the same as for 3 - 4.2 GHz. This assessment was made under the assumption of testing BS designed for licensed spectrum; for unlicensed spectrum the MU may differ.

The MU value was thus agreed to be 2.5 dB for up to 3 GHz bands and 2.6 dB for 3 – 6 GHz bands. The MU in 4.2 - 6 GHz is valid for BS designed to operate in licensed spectrum.

For FR2, for the direct far field method the MU budget is very similar to the existing MU budget for the EIRP accuracy requirement. However there are a number of additional sources of uncertainty due to the environmental enclosure that need to be added to the budget. For FR2 only the CATR MU budget has been assessed however other suitable camber types are not precluded.

Based on the above evaluation, the MU was decided to be 3.1 dB for the frequency range 24.25 < f < 29.5 GHz and 3.3 dB for the frequency range 37 < f < 43.5 GHz.

Test system specific measurement uncertainty values for the EIRP accuracy in Extreme test conditions are summarised in table 9.3.4-1.

Table 9.3.4-1: Test system specific measurement uncertainty values for the EIRP accuracy in Extreme test conditions, FR1

	Expanded uncertainty u_e (dB)		
	f ≤ 3 GHz	**3 GHz < f ≤ 4.2 GHz**	**4.2 GHz < f ≤ 6 GHz**
Indoor Anechoic Chamber	2.46	2.53	2.53
Compact Antenna Test Range	2.51	2.58	2.55
Common maximum accepted test system uncertainty	**2.5**	**2.6**	**2.6**

Table 9.3.4-2: Test system specific measurement uncertainty values for the EIRP accuracy in Extreme test conditions, FR2

	Expanded uncertainty u_e (dB)		
	24.25 < f <29.5 GHz	**37 < f ≤ 43.5 GHz**	**43.5 < f < 48.2 GHz**
Compact Antenna Test Range	3.05	3.25	-
Common maximum accepted test system uncertainty	**3.1**	**3.3**	**3.5 (NOTE)**
NOTE: MU estimation for 43.5 < f < 48.2 GHz was derived based on the linear approximation (based on MU values for lower frequency ranges). MU extrapolation approach was used instead of the typical derivation of the Expanded MU based on the MU budget calculations, as in case of lower frequency ranges.			

An overview of the MU values for all the requirements is captured in clause 17.

9.3.5 Test Tolerance for EIRP accuracy, Extreme test conditions

Considering the methodology described in clause 5.1, Test Tolerance values for EIRP were derived based on values captured in clause 9.3.4.

The TT was decided to be the same as the MU for EIRP accuracy in FR1.

The TT was decided to be the same as the MU for EIRP accuracy in FR2.

Frequency range specific Test Tolerance values for the EIRP accuracy test are defined in table 9.3.5-1.

Table 9.3.5-1: Test Tolerance values for the EIRP accuracy in Extreme test conditions, FR1

	f ≤ 3 GHz	**3 GHz < f ≤ 4.2 GHz**	**4.2 GHz < f ≤ 6 GHz**
Test Tolerance (dB)	**2.5**	**2.6**	**2.6**

Table 9.3.5-2: Test Tolerance values for the EIRP accuracy in Extreme test conditions, FR2

	24.25 < f <29.5 GHz	37 GHz < f ≤ 43.5 GHz	43.5 < f < 48.2 GHz
Test Tolerance (dB)	**3.1**	**3.3**	**3,5**

An overview of the TT values for all the requirements is captured in clause 18.

9.4 OTA E-UTRA DL RS power

9.4.1 General

Clause 9.4 captures MU and TT values derivation for the OTA E-UTRA DL RS power directional requirement.

DL RS power is an E-UTRA specific measurement applicable to the OTA AAS BS, and it is defined as:

- The DL RS power is the resource element power of the Downlink Reference Symbol at the RIB transmitting the DL RS for a cell.
- The absolute DL RS power is indicated on the DL-SCH. The absolute accuracy is defined as the maximum deviation between the DL RS power indicated on the DL-SCH and the DL RS power of each E-UTRA carrier.

As such it is an absolute power (i.e. EIRP) measurement of a single RE.

It is assumed that the value broadcast on DL-SCH is a conducted or TRP value, since the power is measured at the antenna connector. To facilitate efficient testing, OTA DL RS power is tested by measuring EIRP as a directional requirement, and compared with a declared DL RS EIRP derived from the power broadcast on the DL-SCH and the BS directivity in the direction to be tested. This is sufficient to demonstrate the ability of the physical layer to deliver accurate RS power.

As the requirement is based on absolute directional power the absolute level will be subject to the same calibration and measurement errors as the EIRP measurement (in Normal test conditions). However as the measurement is for a single RE it is necessary to demodulate the received signal and this is done at the same time as the OTA EVM test using the "global in-channel TX test" as described in annex L of TS 38.141-2 [6] for NR.

The demodulated power accuracy test is not as accurate as the power measurement using a power meter for the EIRP accuracy test.

The MU is calculated by using the conducted MU in the MU uncertainty budget in place of the RF measurement equipment.

9.4.2 Indoor Anechoic Chamber

9.4.2.1 Measurement system description

Measurement system description is captured in clause 7.2.1.

9.4.2.2 Test procedure

9.4.2.2.1 Stage 1: Calibration

Calibration procedure for the Indoor Anechoic Chamber is captured in clause 8.2 with the calibration system setup for TX requirements depicted in figure 8.2-1.

9.4.2.2.2 Stage 2: BS measurement

The IAC testing procedure consists of the following steps:

1) Uninstall the reference antenna and install the BS with the manufacturer declared coordinate system reference point in the same place as the phase centre of the reference antenna. The manufacturer declared coordinate system orientation of the BS is set to be aligned with the testing system.

2) Set the BS to generate the tested beam with the *beam peak direction* intended to be the same as the testing direction.

3) Rotate the BS to make the testing direction aligned with the direction of the receiving antenna.

4) Set the BS to transmit the test signal at the maximum power according to applicable test model.

5) Measure the P_{DL_RS}, which is the measured signal power of DL RS EIRP (in the *beam peak direction*).

6) Calculate the $EIRP_{DL\_RS}$ with the following formula:

$$EIRP_{DL\_RS} = P_{DL\_RS} + L_{TX\_cal,\ A\rightarrow D}$$

and

$$EIRP_{DL\_RS} = EIRP_{DL\_RS\_p1} + EIRP_{DL\_RS\_p2}$$

where the declared beam is the measured signal for any two orthogonal polarizations (denoted p1 and p2).

7) Repeat steps 2 - 6 for all conformance test *beam direction pairs* and test conditions.

9.4.2.3 MU value derivation, FR1

As the DL RS power is an absolute measurement most of the uncertainties form the EIRP accuracy remain the same. Also it can be noted that the measured signal is a wanted signal and hence will be beam formed in the same way as the wanted signal, hence any errors which may be dependent on the beam shape will be the same as for the EIRP accuracy measurement.

Table 9.4.2.3-1: Indoor Anechoic Chamber measurement uncertainty value derivation for OTA E-UTRA DL RS power measurement

UID	Uncertainty source	Uncertainty value (dB)			Distribution of the probability	Divisor based on distribution shape	c_i	Standard uncertainty u_i (dB)		
		f ≤ 3 GHz	3 < f ≤ 4.2 GHz	4.2 < f ≤ 6 GHz				f ≤ 3 GHz	3 < f ≤ 4.2 GHz	4.2 < f ≤ 6 GHz
Stage 2: BS measurement										
A1-1	Positioning misalignment between the BS and the reference antenna	0.03	0.03	0.03	Rectangular	1.73	1	0.02	0.02	0.02
A1-2	Pointing misalignment between the BS and the receiving antenna	0.30	0.30	0.30	Rectangular	1.73	1	0.17	0.17	0.17
A1-3	Quality of quiet zone	0.10	0.10	0.10	Gaussian	1.00	1	0.10	0.10	0.10
A1-4a	Polarization mismatch between the BS and the receiving antenna	0.01	0.01	0.01	Rectangular	1.73	1	0.01	0.01	0.01
A1-5a	Mutual coupling between the BS and the receiving antenna	0.00	0.00	0.00	Rectangular	1.73	1	0.00	0.00	0.00
A1-6	Phase curvature	0.05	0.05	0.05	Gaussian	1.00	1	0.05	0.05	0.05
C3-1	DL-RS MU derived from conducted specification	0.41	0.56	0.56	Gaussian	1.00	1	0.41	0.56	0.56
A1-7	Impedance mismatch in the receiving chain	0.14	0.33	0.33	U-shaped	1.41	1	0.10	0.23	0.23
A1-8	Random uncertainty	0.10	0.10	0.10	Rectangular	1.73	1	0.06	0.06	0.06
Stage 1: Calibration measurement										
A1-9	Impedance mismatch between the receiving antenna and the network analyzer	0.05	0.05	0.05	U-shaped	1.41	1	0.04	0.04	0.04
A1-10	Positioning and pointing misalignment between the reference antenna and the receiving antenna	0.01	0.01	0.01	Rectangular	1.73	1	0.01	0.01	0.01
A1-11	Impedance mismatch between the reference antenna and the network analyzer.	0.05	0.05	0.05	U-shaped	1.41	1	0.04	0.04	0.04
A1-3	Quality of quiet zone	0.10	0.10	0.10	Gaussian	1.00	1	0.10	0.10	0.10
A1-4b	Polarization mismatch between the reference antenna and the receiving antenna	0.01	0.01	0.01	Rectangular	1.73	1	0.01	0.01	0.01
A1-5b	Mutual coupling between the reference antenna and the receiving antenna	0.00	0.00	0.00	Rectangular	1.73	1	0.00	0.00	0.00
A1-6	Phase curvature	0.05	0.05	0.05	Gaussian	1.00	1	0.05	0.05	0.05
C1-3	Uncertainty of the network analyzer	0.13	0.20	0.20	Gaussian	1.00	1	0.13	0.20	0.20
A1-12	Influence of the reference antenna feed cable	0.05	0.05	0.05	Rectangular	1.73	1	0.03	0.03	0.03
A1-13	Reference antenna feed cable loss measurement uncertainty	0.06	0.06	0.06	Gaussian	1.00	1	0.06	0.06	0.06
A1-14	Influence of the receiving antenna feed cable	0.05	0.05	0.05	Rectangular	1.73	1	0.03	0.03	0.03
C1-4	Uncertainty of the absolute gain of the reference antenna	0.50	0.43	0.43	Rectangular	1.73	1	0.29	0.25	0.25
A1-15	Uncertainty of the absolute gain of the receiving antenna	0.00	0.00	0.00	Rectangular	1.73	1	0.00	0.00	0.00
Combined standard uncertainty (1σ) (dB)								**0.59**	**0.73**	**0.73**
Expanded uncertainty (1.96σ - confidence interval of 95 %) (dB)								**1.15**	**1.44**	**1.44**

9.4.3 Compact Antenna Test Range

9.4.3.1 Measurement system description

Measurement system description is captured in clause 7.3.1.

9.4.3.2 Test procedure

9.4.3.2.1 Stage 1: Calibration

Calibration procedure for the Compact Antenna Test Range is captured in clause 8.3.

9.4.3.2.2 Stage 2: BS measurement

The CATR testing procedure consists of the following steps:

1) Set up BS in place of SGH from calibration stage. Align BS with *beam peak direction* of range antenna.

2) Configure TX branch and carrier according to maximum power requirement and test configuration.

4) Set the BS to transmit the applicable test signal.

5) Measure the P_{DL_RS} which is the measured signal power of DL RS EIRP (in the *beam peak direction*).

6) Calculate $EIRP_{DL\_RS}$ using the following equation:

$$EIRP_{DL\_RS\_p(x)} = P_{DL\_RS\_meas} + L_{A \rightarrow B}.$$

And

$EIRP_{DL\_RS} = EIRP_{DL\_RS\_p1} + EIRP_{DL\_RS\_p2}$ where the declared beam is the measured signal for any two orthogonal polarizations (denoted p1 and p2).

7) Repeat steps 2-6 for all conformance test *beam direction pairs* and test conditions.

9.4.3.3 MU value derivation, FR1

As the DL RS power is an absolute measurement most of the uncertainties form the EIRP accuracy remain the same. Also it can be noted that the measured signal is a wanted signal and hence will be beam formed in the same way as the wanted signal, hence any errors which may be dependent on the beam shape will be the same as for the EIRP accuracy measurement.

Table 9.4.3.3-1: CATR MU value derivation for OTA E-UTRA DL RS power measurement

UID	Uncertainty source	Uncertainty value (dB)			Distribution of the probability	Divisor based on distribution shape	c_i	Standard uncertainty u_i (dB)		
		f ≤ 3 GHz	3 < f ≤ 4.2 GHz	4.2 < f ≤ 6 GHz				f ≤ 3 GHz	3 < f ≤ 4.2 GHz	4.2 < f ≤ 6 GHz
Stage 2: BS measurement										
A2-1a	Misalignment and pointing error of BS (for EIRP)	0.00	0.00	0.00	Exp. normal	2.00	1	0.00	0.00	0.00
C3-1	DL-RS MU derived from conducted specification	0.41	0.56	0.56	Gaussian	1.00	1	0.41	0.56	0.56
A2-2a	Standing wave between BS and test range antenna	0.21	0.21	0.21	U-shaped	1.41	1	0.15	0.15	0.15
A2-3	RF leakage (SGH connector terminated & test range antenna connector cable terminated)	0.00	0.00	0.00	Gaussian	1.00	1	0.00	0.00	0.00
A2-4a	QZ ripple experienced by BS	0.09	0.09	0.09	Gaussian	1.00	1	0.09	0.09	0.09
A2-12	Frequency flatness of test system	0.25	0.25	0.25	Gaussian	1.00	1	0.25	0.25	0.25
Stage 1: Calibration measurement										
C1-3	Uncertainty of the network analyzer	0.13	0.20	0.20	Gaussian	1.00	1	0.13	0.20	0.20
A2-5a	Mismatch of receiver chain between receiving antenna and measurement receiver	0.13	0.33	0.33	U-shaped	1.41	1	0.09	0.23	0.23
A2-6	Insertion loss of receiver chain	0.18	0.18	0.18	Rectangular	1.73	1	0.10	0.10	0.10
A2-3	RF leakage (SGH connector terminated & test range antenna connector cable terminated)	0.00	0.00	0.00	Gaussian	1.00	1	0.00	0.00	0.00
A2-7	Influence of the calibration antenna feed cable	0.02	0.02	0.02	U-shaped	1.41	1	0.02	0.02	0.02
C1-4	Uncertainty of the absolute gain of the reference antenna	0.50	0.43	0.43	Rectangular	1.73	1	0.29	0.25	0.25
A2-8	Misalignment positioning system	0.00	0.00	0.00	Exp. normal	2.00	1	0.00	0.00	0.00
A2-1b	Misalignment and pointing error of calibration antenna (for EIRP)	0.50	0.50	0.50	Exp. normal	2.00	1	0.25	0.25	0.25
A2-9	Rotary joints	0.05	0.05	0.05	U-shaped	1.41	1	0.03	0.03	0.03
A2-2b	Standing wave between calibration antenna and test range antenna	0.09	0.09	0.09	U-shaped	1.41	1	0.06	0.06	0.06
A2-4b	QZ ripple experienced by calibration antenna	0.01	0.01	0.01	Gaussian	1.00	1	0.01	0.01	0.01
A2-11	Switching uncertainty	0.26	0.26	0.26	Rectangular	1.73	1	0.15	0.15	0.15
Combined standard uncertainty (1σ) (dB)								**0.69**	**0.81**	**0.81**
Expanded uncertainty (1.96σ - confidence interval of 95 %) (dB)								**1.35**	**1.60**	**1.60**

9.4.4 Near Field Test Range

9.4.4.1 Measurement system description

Measurement system description is captured in clause 7.5.1.

9.4.4.2 Test procedure

9.4.4.2.1 Stage 1: Calibration

Calibration procedure for the Near Field Test Range is captured in clause 8.5.

9.4.4.2.2 Stage 2: BS measurement

The NFTR testing procedure consists of the following steps:

1) BS near field *radiation pattern* measurement: this is performed with the BS transmitting a defined modulated signal, as defined in applicable conformance test specification.

   a) DL RS is measured during near field *radiation pattern* measurement and used as the basis for the NF to FF transformation.

2) BS near field to far field transformation: the near field power calibration is applied.

The near field to far field transformation is a mathematical computation which is applied to the near field measured *radiation pattern* in order to compute the far field *radiation pattern*. It is typically performed expanding the measured near field over a set of orthogonal basis functions. The near to far field transform is then performed in two steps:

1) Expansion (or projection) of the measured near field (i.e. Emeas(r)) over a set of orthogonal basis functions (i.e. Fbasis(r)) in order to evaluate the transformed spectrum:

$$Emeas(r) = Spectrum * Fbasis(r)$$

2) FF (i.e. EFF) computation using the previuosly calculated spectrum and with the basis functions evaluated at $r \rightarrow \infty$ (i.e. $Fbasis(r \rightarrow \infty)$):

$$EFF = Spectrum * Fbasis(r \rightarrow \infty)$$

When performing the near field to far field transformation, the gain calibration is applied so that the near field pattern will be transformed from relative power (i.e. dB) to absolute power (i.e. dBm). In this specific case, the EIRP far field pattern is expressed in terms of the absolute power radiated by the BS in the declared beam:

1) DL RS power EIRP: once the full 3D far field EIRP pattern has been computed, the DL RS power EIRP can be derived at the *beam peak direction* according to the declared *beam direction pair*.

9.4.4.3 MU value derivation, FR1

Table 9.4.4.3-1: NFTR measurement uncertainty value derivation for OTA E-UTRA DL RS power measurement

UID	Uncertainty source	Uncertainty value (dB)			Distribution of the probability	Divisor based on distribution shape	c_i	Standard uncertainty u_i (dB)		
		f ≤ 3 GHz	3 < f ≤ 4.2 GHz	4.2 < f ≤ 6 GHz				f ≤ 3 GHz	3 < f ≤ 4.2 GHz	4.2 < f ≤ 6 GHz
Stage 2: BS measurement										
A3-1	Axes intersection	0.00	0.00	0.00	Gaussian	1.00	1	0.00	0.00	0.00
A3-2	Axes orthogonality	0.00	0.00	0.00	Gaussian	1.00	1	0.00	0.00	0.00
A3-3	Horizontal pointing	0.00	0.00	0.00	Gaussian	1.00	1	0.00	0.00	0.00
A3-4	Probe vertical position	0.00	0.00	0.00	Gaussian	1.00	1	0.00	0.00	0.00
A3-5	Probe horizontal/vertical pointing	0.00	0.00	0.00	Gaussian	1.00	1	0.00	0.00	0.00
A3-6	Measurement distance	0.00	0.00	0.00	Gaussian	1.00	1	0.00	0.00	0.00
A3-7	Amplitude and phase drift	0.00	0.00	0.00	Gaussian	1.00	1	0.00	0.00	0.00
A3-8	Amplitude and phase noise	0.02	0.02	0.02	Gaussian	1.00	1	0.02	0.02	0.02
A3-9	Leakage and crosstalk	0.00	0.00	0.00	Gaussian	1.00	1	0.00	0.00	0.00
A3-10	Amplitude non-linearity	0.04	0.04	0.04	Gaussian	1.00	1	0.04	0.04	0.04
A3-11	Amplitude and phase shift in rotary joints	0.00	0.00	0.00	Gaussian	1.00	1	0.00	0.00	0.00
A3-12	Channel balance amplitude and phase	0.00	0.00	0.00	Gaussian	1.00	1	0.00	0.00	0.00
A3-13	Probe polarization amplitude and phase	0.00	0.00	0.00	Gaussian	1.00	1	0.00	0.00	0.00
A3-14	Probe pattern knowledge	0.00	0.00	0.00	Gaussian	1.00	1	0.00	0.00	0.00
A3-15	Multiple reflections	0.00	0.00	0.00	Gaussian	1.00	1	0.00	0.00	0.00
A3-16	Room scattering	0.09	0.09	0.09	Gaussian	1.00	1	0.09	0.09	0.09
A3-17	BS support scattering	0.00	0.00	0.00	Gaussian	1.00	1	0.00	0.00	0.00
A3-18	Scan area truncation	0.00	0.00	0.00	Gaussian	1.00	1	0.00	0.00	0.00
A3-19	Sampling point offset	0.01	0.01	0.01	Gaussian	1.00	1	0.01	0.01	0.01
A3-20	Spherical mode truncation	0.02	0.02	0.02	Gaussian	1.00	1	0.02	0.02	0.02
A3-21	Positioning	0.03	0.03	0.03	Rectangular	1.73	1	0.02	0.02	0.02
A3-22	Probe array uniformity	0.06	0.06	0.06	Gaussian	1.00	1	0.06	0.06	0.06
A3-23	Mismatch of receiver chain	0.28	0.28	0.28	U-Shaped	1.41	1	0.20	0.20	0.20
A3-24	Insertion loss of receiver chain	0.00	0.00	0.00	Gaussian	1.00	1	0.00	0.00	0.00
A3-25	Uncertainty of the absolute gain of the probe antenna	0.00	0.00	0.00	Gaussian	1.00	1	0.00	0.00	0.00
C3-1	DL-RS MU derived from conducted specification	0.41	0.56	0.56	Gaussian	1.00	1	0.41	0.56	0.56
A3-26	Measurement repeatability - positioning repeatability	0.15	0.15	0.15	Gaussian	1.00	1	0.15	0.15	0.15
Stage 1: Calibration measurement										
C1-3	Uncertainty of the network analyzer	0.13	0.20	0.20	Gaussian	1.00	1	0.13	0.20	0.20
A3-27	Mismatch of receiver chain	0.00	0.00	0.00	Gaussian	1.00	1	0.00	0.00	0.00
A3-28	Insertion loss of receiver chain	0.00	0.00	0.00	Gaussian	1.00	1	0.00	0.00	0.00
A3-29	Mismatch in the connection of the calibration antenna	0.02	0.02	0.02	U-Shaped	1.41	1	0.01	0.01	0.01
A3-30	Influence of the calibration antenna feed cable	0.00	0.00	0.00	Gaussian	1.00	1	0.00	0.00	0.00
A3-31	Influence of the probe antenna cable	0.00	0.00	0.00	Gaussian	1.00	1	0.00	0.00	0.00
C1-4	Uncertainty of the absolute gain of the reference antenna	0.50	0.43	0.43	Rectangular	1.73	1	0.29	0.25	0.25
A3-32	Short term repeatability	0.09	0.09	0.09	Gaussian	1.00	1	0.09	0.09	0.09
Combined standard uncertainty (1σ) (dB)								**0.59**	**0.71**	**0.71**
Expanded uncertainty (1.96σ - confidence interval of 95 %) (dB)								**1.17**	**1.39**	**1.39**

9.4.5 Plane Wave Synthesizer

9.4.5.1 Measurement system description

Measurement system description is captured in clause 7.6.1.

9.4.5.2 Test procedure

9.4.5.2.1 Stage 1: Calibration

Calibration procedure for the Plane Wave Synthesizer is captured in clause 8.6.

9.4.5.2.2 Stage 2: BS measurement

The PWS testing procedure consists of the following steps:

1) Set up BS in place of SGH from calibration stage. Align BS with *beam peak direction* of range antenna.
2) Configure TX branch and carrier according to maximum power requirement and test configuration.
3) Set the BS to transmit the applicable test signal.
4) Measure the P_{DL_RS} which is the measured signal power of DL RS EIRP (in the *beam peak direction*).
5) Calculate $EIRP_{DL\_RS}$ using the following equation:

$$EIRP_{DL\_RS\_p(x)} = P_{DL\_RS\_meas} + L_{A \rightarrow C}.$$

   And

   $EIRP_{DL\_RS} = EIRP_{DL\_RS\_p1} + EIRP_{DL\_RS\_p2}$ where the declared beam is the measured signal for any two orthogonal polarizations (denoted p1 and p2).

6) Repeat steps 2-5 for all conformance test *beam direction pairs* and test conditions.

9.4.5.3 MU value derivation, FR1

As the DL RS power is an absolute measurement most of the uncertainties form the EIRP accuracy remain the same. Also it can be noted that the measured signal is a wanted signal and hence will be beam formed in the same way as the wanted signal, hence any errors which may be dependent on the beam shape will be the same as for the EIRP accuracy measurement.

Table 9.4.5.3-1: PWS MU value derivation for OTA E-UTRA DL RS power measurement

UID	Uncertainty source	Uncertainty value (dB)			Distribution of the probability	Divisor based on distribution shape	c_i	Standard uncertainty u_i (dB)		
		f ≤ 3 GHz	3 < f ≤ 4.2 GHz	4.2 < f ≤ 6 GHz				f ≤ 3 GHz	3 < f ≤ 4.2 GHz	4.2 < f ≤ 6 GHz
Stage 2: BS measurement										
A7-1a	Misalignment and pointing error of BS	0.10	0.10	0.10	Rectangular	1.73	1	0.06	0.06	0.06
C3-1	DL-RS MU derived from conducted specification	0.41	0.56	0.56	Gaussian	1.00	1	0.41	0.56	0.56
A7-2a	Longitudinal position uncertainty (i.e. standing wave and imperfect field synthesis) for BS antenna	0.05	0.14	0.20	Rectangular	1.73	1	0.03	0.08	0.12
A7-3	RF leakage (calibration antenna connector terminated)	0.09	0.09	0.09	Gaussian	1.00	1	0.09	0.09	0.09
A7-4a	QZ ripple experienced by BS	0.42	0.43	0.57	Rectangular	1.73	1	0.24	0.25	0.33
A7-5	Miscellaneous uncertainty	0.00	0.00	0.00	Gaussian	1.00	1	0.00	0.00	0.00
A7-14	System non-linearity	0.10	0.10	0.15	Rectangular	1.73	1	0.06	0.06	0.09
A7-13	Frequency flatness of test system	0.13	0.13	0.13	Rectangular	1.73	1	0.08	0.08	0.08
Stage 1: Calibration measurement										
C1-3	Uncertainty of the network analyzer	0.13	0.20	0.20	Gaussian	1.00	1	0.13	0.20	0.20
A7-6	Mismatch (i.e. reference antenna, network analyser and reference cable)	0.13	0.33	0.33	U-shaped	1.41	1	0.09	0.23	0.23
A7-7	Insertion loss of receiver chain	0.18	0.18	0.18	Rectangular	1.73	1	0.10	0.10	0.10
A7-3	RF leakage (calibration antenna connector terminated)	0.09	0.09	0.09	Gaussian	1.00	1	0.09	0.09	0.09
A7-8	Influence of the calibration antenna feed cable	0.10	0.10	0.10	Rectangular	1.73	1	0.06	0.06	0.06
C1-4	Uncertainty of the absolute gain of the reference antenna	0.50	0.43	0.43	Rectangular	1.73	1	0.29	0.25	0.25
A7-9	Misalignment of positioning system	0.00	0.00	0.00	Exp. normal	2.00	1	0.00	0.00	0.00
A7-1b	Misalignment and pointing error of calibration antenna	0.05	0.05	0.05	Rectangular	1.73	1	0.03	0.03	0.03
A7-10	Rotary joints	0.00	0.00	0.00	U-shaped	1.73	1	0.00	0.00	0.00

A7-2b	Longitudinal position uncertainty (i.e. standing wave and imperfect field synthesis) for calibration antenna	0.12	0.12	0.15	Rectangular	1.73	1	0.07	0.07	0.09
A7-4b	QZ ripple experienced by calibration antenna	0.20	0.20	0.20	Rectangular	1.73	1	0.12	0.12	0.12
A7-11	Switching uncertainty	0.02	0.02	0.02	Rectangular	1.73	1	0.01	0.01	0.01
A7-12	Field repeatability	0.06	0.12	0.15	Gaussian	1.00	1	0.06	0.12	0.15
Combined standard uncertainty (1σ) (dB)								**0.63**	**0.78**	**0.82**
Expanded uncertainty (1.96σ - confidence interval of 95 %) (dB)								**1.24**	**1.53**	**1.62**

9.4.6 Maximum accepted test system uncertainty

Maximum test system uncertainties derivation methodology was described in clause 5.1. The maximum accepted test system uncertainty values was derived based on test system specific values.

According to the methodology referred above, the common maximum accepted test system uncertainty values for the OTA E-UTRA DL RS power test can be derived from values captured in table 9.4.6-1, separately for each of the defined frequency ranges. The common maximum values are applicable for all test methods addressing OTA E-UTRA DL RS power test requirement. Based on the input values, the expanded uncertainty u_e (1.96σ - confidence interval of 95 %) values were derived.

Table 9.4.6-1: Test system specific measurement uncertainty values for the OTA E-UTRA DL RS power test

	Expanded uncertainty u_e (dB)		
	f≤3 GHz	**3 < f≤4.2 GHz**	**4.2 < f≤6 GHz**
Indoor Anechoic Chamber	1.15	1.44	1.44
Compact Antenna Test Range	1.35	1.60	1.60
One Dimensional Compact Range Chamber	1.17	1.39	1.39
Plane Wave Synthesizer	1.24	1.53	1.62
Common maximum accepted test system uncertainty	**1.3**	**1.5**	**1.5**

9.4.7 Test Tolerance for OTA E-UTRA DL RS power

The TT was decided to be the same as the MU in FR1.

Table 9.4.7-1: Test Tolerance values for the OTA E-UTRA DL RS power

	f ≤ 3 GHz	**3 GHz < f ≤ 4.2 GHz**	**4.2 GHz < f ≤ 6 GHz**
Test Tolerance (dB)	**1.3**	**1.5**	**1.5**

9.5 OTA output power dynamics

9.5.1 General

Clause 9.5 captures MU and TT values derivation for the OTA output power dynamics directional requirement.

There are a number of UTRA and E-UTRA dynamic power requirements, they are all relative requirements which specify the dynamic range and step size accuracy of UTRA code domain channels and E-UTRA RE's.

As the requirements are differential many of the measurement uncertainty values may cancel out however, in some cases demodulated signal power level (code domain power or RE power) are compared to maximum carrier power. As such the differential measurements may use different test equipment setting and hence not all test equipment uncertainties are cancelled out.

In all cases the measured signal are wanted signals and will be subject to the same beam forming as the main beam.

9.5.2 Indoor Anechoic Chamber

9.5.2.1 Measurement system description

Measurement system description is captured in clause 7.2.1.

9.5.2.2 Test procedure

9.5.2.2.1 Stage 1: Calibration

Calibration procedure for the Indoor Anechoic Chamber is captured in clause 8.2.

9.5.2.2.2 Stage 2: BS measurement

Reference IAC testing procedure in clause 9.2.2.2.2 (i.e. EIRP accuracy measurement procedure for Normal test conditions) where the appropriate measurement is:

The appropriate test parameter in steps 5 - 7 for the output power dynamics vary depending on the specific measurement as described for the conducted measurement in TS 37.145-1 [21] in each case however the EIRP measurement is made on both polarisations and added as follows:

$$EIRP_{meas\_p(x)} = P_{meas\_p(x)} + L_{A \rightarrow B}$$

and

$$EIRP_{meas} = EIRP_{meas\_p1} + EIRP_{meas\_p2}$$

where the declared beam is the measured signal for any two orthogonal polarizations (denoted p1 and p2).

Furthermore, the measurement is performed twice; once with the BS transmitting at $P_{rated,c,EIRP}$ on all PRBs and then a second time with the BS transmitting on a single PRB. Both measurements are made in the same conformance direction in the same calibrated test setup. The ratio of these two EIRP levels is used to assess compliance for the OTA total power dynamic range.

9.5.2.3 MU value derivation, FR1

As the output power dynamics are relative measurements most of the uncertainties form the EIRP accuracy cancel out as the same error will be applied to both of the measured OTA signals.

This includes all calibration errors, misalignment errors, impedance mismatch and mutual coupling.

As the both the measured OTA signal will have the same beam pattern quiet zone errors, phase curvature errors also can be expected to be the same for both signals.

The uncertainty budget descriptions are the same as those in clause 9.2.2.3 with the addition descriptions in table 9.5.2.3-1.

The MU uncertainty assessment is shown in table 9.5.2.3-1, zero values have been omitted in the table for the sake of space, but still be considered as part of the budget.

Table 9.5.2.3-1: Indoor Anechoic Chamber measurement uncertainty value derivation for OTA total power dynamic range measurement

UID	Uncertainty source	Uncertainty value (dB)			Distribution of the probability	Divisor based on distribution shape	c_i	Standard uncertainty u_i (dB)		
		f ≤ 3 G Hz	3 < f ≤ 4.2 GHz	4.2 < f ≤ 6 GHz				f ≤ 3 G Hz	3 < f ≤ 4.2 GHz	4.2 < f ≤ 6 GHz
Stage 2: BS measurement										
C3-2	Total power dynamic range conducted uncertainty	0.20	0.20	0.20	Gaussian	1.00	1	0.20	0.20	0.20
A1-8	Random uncertainty	0.10	0.10	0.10	Rectangular	1.73	1	0.06	0.06	0.06
Stage 1: Calibration measurement										
Combined standard uncertainty (1σ) (dB)								**0.21**	**0.21**	**0.21**
Expanded uncertainty (1.96σ - confidence interval of 95 %) (dB)								**0.41**	**0.41**	**0.41**

The same uncertainty assessments have been carried out for the UTRA dynamic range requirements, i.e.

- Power control steps,
- Power control dynamic range,
- Total power dynamic range,
- IPDL Time mask.

In each case the uncertainty for the conducted measurement is the same as that for the conducted MU in TS 25.141 [2] as follows:

- Power control steps, Uncertainty of conducted measurement = 0.1 dB, Expanded OTA uncertainty = 0.15 dB.
- Power control dynamic range, Uncertainty of conducted measurement = 1.1 dB, Expanded OTA uncertainty = 1.11 dB.
- Total power dynamic range, Uncertainty of conducted measurement = 0.3 dB, Expanded OTA uncertainty = 0.32 dB.
- IPDL Time mask, Uncertainty of conducted measurement = 0.7dB, Expanded OTA uncertainty = 0.71 dB.

9.5.3 Compact Antenna Test Range

9.5.3.1 Measurement system description

Measurement system description is captured in clause 7.3.1.

9.5.3.2 Test procedure

9.5.3.2.1 Stage 1: Calibration

Calibration procedure for the Compact Antenna Test Range is captured in clause 8.3.

9.5.3.2.2 Stage 2: BS measurement

Reference CATR measurement procedure in clause 9.2.3.2.2 where in step 6 the appropriate measurement is:

The appropriate test parameter in step 6 for the output power dynamics vary depending on the specific measurement as described for the conducted measurement in each case however the EIRP measurement is made on both polarisations and added as follows:

$$EIRP_{meas\_p(x)} = P_{meas\_p(x)} + L_{A \rightarrow B}.$$

and

$$EIRP_{meas} = EIRP_{meas\_p1} + EIRP_{meas\_p2}$$

where the declared beam is the measured signal for any two orthogonal polarizations (denoted p1 and p2).

Furthermore, the measurement is performed twice; once with the BS transmitting at $P_{rated,c,EIRP}$ on all PRBs (in case of NR) and then a second time with the BS transmitting on a single PRB. Both measurements are made in the same conformance direction in the same calibrated test setup. The ratio of these two EIRP levels is used to assess compliance for the OTA total power dynamic range.

9.5.3.3 MU value derivation, FR1

As the output power dynamics are relative measurements most of the uncertainties form the EIRP accuracy cancel out as the same error will be applied to both of the measured OTA signals.

This includes all calibration errors, misalignment errors, impedance mismatch and mutual coupling.

As the both the measured OTA signal will have the same beam pattern quiet zone errors, phase curvature errors also can be expected to be the same for both signals.

The uncertainty budget descriptions are the same as those in clause 9.2.3.2.2 with the addition descriptions in table 9.5.3.3-1.

The MU uncertainty assessment is shown in table 9.5.3.3-1, zero values have been omitted in the table for the sake of space, but still be considered as part of the budget.

Table 9.5.3.3-1: CATR MU value derivation for OTA total power dynamic range measurement

UID	Uncertainty source	Uncertainty value (dB)			Distribution of the probability	Divisor based on distribution shape	c_i	Standard uncertainty u_i (dB)		
		f ≤ 3 GHz	3 < f ≤ 4.2 GHz	4.2 < f ≤ 6 GHz				f ≤ 3 GHz	3 < f ≤ 4.2 GHz	4.2 < f ≤ 6 GHz
Stage 2: BS measurement										
C3-2	Total power dynamic range conducted uncertainty	0.20	0.20	0.20	Gaussian	1.00	1	0.20	0.20	0.20
Stage 1: Calibration measurement										
Combined standard uncertainty (1σ) (dB)								**0.20**	**0.20**	**0.20**
Expanded uncertainty (1.96σ - confidence interval of 95 %) (dB)								**0.39**	**0.39**	**0.39**

The same uncertainty assessments have been carried out for the UTRA dynamic range requirements, i.e.

- Power control steps,
- Power control dynamic range,
- Total power dynamic range,
- IPDL Time mask.

In each case the uncertainty for the conducted measurement is the same as that for the conducted MU in TS 25.141 [2] as follows:

- Power control steps: Uncertainty of conducted measurement = 0.1 dB, Expanded OTA uncertainty = 0.1 dB.
- Power control dynamic range: Uncertainty of conducted measurement = 1.1 dB, Expanded OTA uncertainty = 1.1 dB.
- Total power dynamic range: Uncertainty of conducted measurement = 0.3 dB, Expanded OTA uncertainty = 0.3 dB.
- IPDL Time mask: Uncertainty of conducted measurement = 0.7 dB, Expanded OTA uncertainty = 0.7 dB.

9.5.4 Near Field Test Range

9.5.4.1 Measurement system description

Measurement system description is captured in clause 7.5.1.

9.5.4.2 Test procedure

9.5.4.2.1 Stage 1: Calibration

Calibration procedure for the Near Field Test Range is captured in clause 8.5.

9.5.4.2.2 Stage 2: BS measurement

The NFTR measurement procedure consists of the following steps:

1) Measure full DL RS pattern according to the procedure in clause 9.4.4.2.2.

2) From the *beam peak direction*: Measure the appropriate test parameter as specified for the conducted measurement. However the signal power is measured for both polarizations.

9.5.4.3 MU value derivation, FR1

As the output power dynamics are relative measurements most of the uncertainties form the EIRP accuracy cancel out as the same error will be applied to both of the measured OTA signals.

The uncertainty budget descriptions are the same as those in table 9.4.4.3-1 (excluding uncertainties from the NF to FF transformation, since the transformation is not needed) with the addition descriptions in table 9.5.4.3-1.

The MU uncertainty assessment is shown in table 9.5.4.3-1, zero values have been omitted in the table for the sake of space, but still be considered as part of the budget.

Table 9.5.4.3-1: NFTR MU value derivation for OTA E-UTRA total power dynamic range measurement

UID	Uncertainty source	Uncertainty value (dB)			Distribution of the probability	Divisor based on distribution shape	c_i	Standard uncertainty u_i (dB)		
		f ⩽ 3 GHz	3 < f ⩽ 4.2 GHz	4.2 < f ⩽ 6 GHz				f ⩽ 3 GHz	3 < f ⩽ 4.2 GHz	4.2 < f ⩽ 6 GHz
Stage 2: BS measurement										
C3-2	Total power dynamic range conducted uncertainty	0.20	0.20	0.20	Gaussian	1.00	1	0.20	0.20	0.20
Stage 1: Calibration measurement										
Combined standard uncertainty (1σ) (dB)								**0.20**	**0.20**	**0.20**
Expanded uncertainty (1.96σ - confidence interval of 95 %) (dB)								**0.39**	**0.39**	**0.39**

9.5.5 Plane Wave Synthesizer

9.5.5.1 Measurement system description

Measurement system description is captured in clause 7.6.1.

9.5.5.2 Test procedure

9.5.5.2.1 Stage 1: Calibration

Calibration procedure for the Plane Wave Synthesizer is captured in clause 8.6.

9.5.5.2.2 Stage 2: BS measurement

Reference PWS measurement procedure in clause 9.2.6.2.2 where in step 4 the appropriate measurement is:

The appropriate test parameter in step 4 for the output power dynamics vary depending on the specific measurement as described for the conducted measurement in each case however the EIRP measurement is made on both polarisations and added as follows:

$$EIRP_{meas\_p(x)} = P_{meas\_p(x)} + L_{A\rightarrow C}.$$

and

$$EIRP_{meas} = EIRP_{meas\_p1} + EIRP_{meas\_p2}$$

where the declared beam is the measured signal for any two orthogonal polarizations (denoted p1 and p2).

Furthermore, the measurement is performed twice; once with the BS transmitting at $P_{rated,c,EIRP}$ on all PRBs (in case of NR) and then a second time with the BS transmitting on a single PRB. Both measurements are made in the same conformance direction in the same calibrated test setup. The ratio of these two EIRP levels is used to assess compliance for the OTA total power dynamic range.

9.5.5.3 MU value derivation, FR1

As the output power dynamics are relative measurements most of the uncertainties form the EIRP accuracy cancel out as the same error will be applied to both of the measured OTA signals.

The uncertainty budget descriptions are the same as those in table 9.2.6.3-1 with the addition descriptions in table 9.5.5.3-1.

The MU uncertainty assessment is shown in table 9.5.5.3-1, zero values have been omitted in the table for the sake of space, but still be considered as part of the budget.

Table 9.5.5.3-1: PWS MU value derivation for OTA total power dynamic range measurement

UID	Uncertainty source	Uncertainty value (dB)			Distribution of the probability	Divisor based on distribution shape	c_i	Standard uncertainty u_i (dB)		
		f ≤ 3 GHz	3 < f ≤ 4.2 GHz	4.2 < f ≤ 6 GHz				f ≤ 3 GHz	3 < f ≤ 4.2 GHz	4.2 < f ≤ 6 GHz
Stage 2: BS measurement										
C3-2	Total power dynamic range conducted uncertainty	0.20	0.20	0.20	Gaussian	1.00	1	0.20	0.20	0.20
Stage 1: Calibration measurement										
Combined standard uncertainty (1σ) (dB)								**0.20**	**0.20**	**0.20**
Expanded uncertainty (1.96σ - confidence interval of 95 %) (dB)								**0.39**	**0.39**	**0.39**

9.5.6 Maximum accepted test system uncertainty

Maximum test system uncertainties derivation methodology was described in clause 5.1. The maximum accepted test system uncertainty values was derived based on test system specific values.

According to the methodology referred above, the common maximum accepted test system uncertainty values for the OTA output power dynamics tests can be derived from values captured in tables 9.5.6-1 to 9.5.6-5, separately for each of the defined frequency ranges. The common maximum values are applicable for all test methods addressing certain OTA output power dynamics test requirement. Based on the input values, the expanded uncertainty u_e (1.96σ - confidence interval of 95 %) values were derived.

The output power dynamic range MU for FR1 for up to 4.2 GHz was agreed to be the same as for eAAS WI. It is expected that the measurement chamber setup, calibration and measurement procedures and the MU budget will be identical for E-UTRA and NR.

Furthermore, for the frequency range 4.2 – 6 GHz, the chamber and instrument uncertainties are the same as those for the frequency range 3 – 4.2 GHz, assuming testing of a BS designed for operation in licensed spectrum. The MU value was agreed to be ± 0.4 dB for all bands up to 6 GHz.

For FR2: Similarly to FR1, since the OTA output power dynamic range requirement is a relative measurement, only the test equipment uncertainty is of importance. Based on expected test equipment uncertainty, the output power dynamic range MU for FR2 was decided to be ± 0.4 dB (same as for FR1).

Table 9.5.6-1: Test system specific measurement uncertainty values for the OTA E-UTRA and NR total power dynamic range test

	Expanded uncertainty u_e (dB)		
	f ≤ 3 GHz	**3 GHz < f ≤ 4.2 GHz**	**4.2 GHz < f ≤ 6 GHz**
Indoor Anechoic Chamber	0.41	0.41	0.41
Compact Antenna Test Range	0.39	0.39	0.39
Near Field Test Range	0.39	0.39	0.39
Plane Wave Synthesizer	0.39	0.39	0.39
Common maximum accepted test system uncertainty	**0.4**	**0.4**	**0.4**

Table 9.5.6-2: Test system specific measurement uncertainty values for the UTRA inner loop power control steps test

	Expanded uncertainty u_e (dB)		
	f ≤ 3 GHz	**3 GHz < f ≤ 4.2 GHz**	**4.2 GHz < f ≤ 6 GHz**
Indoor Anechoic Chamber	0.1	0.1	0.1
Compact Antenna Test Range	0.1	0.1	0.1
Near Field Test Range	0.1	0.1	0.1
Plane Wave Synthesizer	0.1	0.1	0.1
Common maximum accepted test system uncertainty	**0.1**	**0.1**	**0.1**

Table 9.5.6-3: Test system specific measurement uncertainty values for the UTRA power control dynamic range test

	Expanded uncertainty u_e (dB)		
	f ≤ 3 GHz	**3 GHz < f ≤ 4.2 GHz**	**4.2 GHz < f ≤ 6 GHz**
Indoor Anechoic Chamber	1.1	1.1	1.1
Compact Antenna Test Range	1.1	1.1	1.1
Near Field Test Range	1.1	1.1	1.1
Plane Wave Synthesizer	1.1	1.1	1.1
Common maximum accepted test system uncertainty	**1.1**	**1.1**	**1.1**

Table 9.5.6-4: Test system specific measurement uncertainty values for the UTRA total power dynamic range test

	Expanded uncertainty u_e (dB)		
	f ≤ 3 GHz	**3 GHz < f ≤ 4.2 GHz**	**4.2 GHz < f ≤ 6 GHz**
Indoor Anechoic Chamber	0.3	0.3	0.3
Compact Antenna Test Range	0.3	0.3	0.3
Near Field Test Range	0.3	0.3	0.3
Plane Wave Synthesizer	0.3	0.3	0.3
Common maximum accepted test system uncertainty	**0.3**	**0.3**	**0.3**

Table 9.5.6-5: Test system specific measurement uncertainty values for the UTRA IPDL time mask test

	Expanded uncertainty u_e (dB)		
	f ≤ 3 GHz	**3 GHz < f ≤ 4.2 GHz**	**4.2 GHz < f ≤ 6 GHz**
Indoor Anechoic Chamber	0.7	0.7	0.7
Compact Antenna Test Range	0.7	0.7	0.7
Near Field Test Range	0.7	0.7	0.7
Plane Wave Synthesizer	0.7	0.7	0.7
Common maximum accepted test system uncertainty	**0.7**	**0.7**	**0.7**

An overview of the MU values for all the requirements is captured in clause 17.

9.5.7 Test Tolerance for OTA output power dynamics

Considering the methodology described in clause 5.1, Test Tolerance values for OTA output power dynamics were derived based on values captured in clause 9.5.6.

The TT was decided to be the same as the MU in FR1.

Table 9.5.7-1: Test Tolerance values for the OTA total power dynamic range, FR1

	f ≤ 3 GHz	**3 GHz < f ≤ 4.2 GHz**	**4.2 GHz < f ≤ 6 GHz**
Test Tolerance (dB)	0.4	0.4	0.4

Table 9.5.7-2: Test Tolerance values for the OTA total power dynamic range, FR2

	24.25 < f < 29.5 GHz	**37 < f < 43.5 GHz**	**43.5 < f < 48.2 GHz**
Test Tolerance (dB)	0.4	0.4	0.4

Table 9.5.7-3: Test Tolerance values for the UTRA inner loop power control steps

	f ≤ 3 GHz	**3 GHz < f ≤ 4.2 GHz**	**4.2 GHz < f ≤ 6 GHz**
Test Tolerance (dB)	0.1	0.1	0.1

Table 9.5.7-4: Test Tolerance values for the UTRA power control dynamic range

	f ≤ 3 GHz	**3 GHz < f ≤ 4.2 GHz**	**4.2 GHz < f ≤ 6 GHz**
Test Tolerance (dB)	1.1	1.1	1.1

Table 9.5.7-5: Test Tolerance values for the UTRA total power dynamic range

	f ≤ 3 GHz	**3 GHz < f ≤ 4.2 GHz**	**4.2 GHz < f ≤ 6 GHz**
Test Tolerance (dB)	0.3	0.3	0.3

Table 9.5.7-6: Test Tolerance values for the UTRA IPDL time mask

	f ≤ 3 GHz	3 GHz < f ≤ 4.2 GHz	4.2 GHz < f ≤ 6 GHz
Test Tolerance (dB)	0.7	0.7	0.7

An overview of the TT values for all the requirements is captured in clause 18.

9.6 OTA transmitted signal quality: Frequency error

9.6.1 General

Clause 9.6 captures MU and TT values derivation for the OTA frequency error directional requirement.

Frequency error is the measure of the difference between the actual BS transmit frequency and the assigned frequency. The same source shall be used for RF frequency and data clock generation.

Frequency error is not affected by any time or frequency varying amplitude errors. It is possible that some aspects of the OTA environment may impact the signal fidelity; for example, ripple in a quiet zone relates to reflections in the chamber and may create a frequency specific ripple. It is not expected that such effects would have any significant impact on the frequency error As long as the signal is large enough the only measurement uncertainty will be associated with the measurement equipment. It is important that considering the chamber path loss and gain of the measurement antenna and equipment, the test equipment is provided with a sufficient RX power level. As a guide, measurement equipment vendors quote EVM accuracy down to approx. -20 dBm input power for E-UTRA signals.

Few typical BS output power levels and antenna arrangements for different BS classes are captured in table 9.6.1-1:

Table 9.6.1-1: Typical BS output power levels

BS class	Pout (dBm)	G_AAS (dBi)	L_ant (m)	d_FF (m)	FSPL (dB)	G_RX (dBi)	P_RX (dBm)
WA BS	43	17	1	13.33	60.96	9	8.04
MR BS	38	9	0.5	6.67	54.94	9	1.06
LA BS	24	5	0.2	2.67	46.98	9	-8.98

It can be seen that there is considerable margin over -20 dBm for the received power level, so it seems unlikely that this will cause any measurement problems.

As the OTA test system is not expected to substantially affect the measurement accuracy for frequency error the existing conducted MU can be used.

9.6.2 Indoor Anechoic Chamber

9.6.2.1 Measurement system description

Measurement system description is captured in clause 7.2.1.

9.6.2.2 Test procedure

9.6.2.2.1 Stage 1: Calibration

Calibration procedure for the Indoor Anechoic Chamber is captured in clause 8.2.

9.6.2.2.2 Stage 2: BS measurement

Reference IAC measurement procedure in clause 9.2.2.2.2 (i.e. EIRP accuracy measurement procedure for Normal test conditions) where in steps 5 – 7 the appropriate measurement parameter is frequency error. In this case, however testing

should be carried out in the OTA conformance reference direction, not the *beam peak direction* of the *OTA peak directions set* reference direction.

9.6.2.3 MU value derivation

The uncertainty in the power accuracy of the OTA test chamber will not affect the frequency error uncertainty.

Possible phase variation in the chamber due to variation in the signal BW is not significant to affect the frequency error measurement uncertainty.

The conducted MU value is adopted for the OTA MU.

9.6.3 Compact Antenna Test Range

9.6.3.1 Measurement system description

Measurement system description is captured in clause 7.3.1.

9.6.3.2 Test procedure

9.6.3.2.1 Stage 1: Calibration

Calibration procedure for the Compact Antenna Test Range is captured in clause 8.3.

9.6.3.2.2 Stage 2: BS measurement

As the frequency error is tested together with EVM, the CATR measurement procedure is same with EVM as in clause 9.7.3. The CATR testing procedure consists of the following steps:

1) Align BS with boresight of range antenna.

2) Configure TX branch and carrier according to required test configuration.

3) Measure frequency error of each carrier arriving at the measurement equipment (such as a spectrum analyzer or equivalent instrument).

4) Repeat steps 2 - 3 for all conformance test direction as declared by the manufacturer in TS 37.145-2 [4] or TS 38.141-2 [6].

5) Repeat steps 2 - 4 for all applicable conformance test models.

NOTE: All the discussions above are based on the measurement pre-condition of reference clock synchronized between measurement system with RF frequency signal.

9.6.3.3 MU value derivation

The uncertainty in the power accuracy of the OTA test chamber will not affect the frequency error uncertainty.

Possible phase variation in the chamber due to variation in the signal BW is not significant to affect the frequency error measurement uncertainty.

The conducted MU value is adopted for the OTA MU.

9.6.4 Near Field Test Range

9.6.4.1 Measurement system description

Measurement system description is captured in clause 7.5.1.

In case of OTA Frequency Error type of measurements, NF to FF transform is not needed. Frequency Error is measured in Near Field for the declared direction.

9.6.4.2 Test procedure

9.6.4.2.1 Stage 1: Calibration

Calibration procedure for the Near Field Test Range is captured in clause 8.5 to ensure that the SNR at the measurement equipment input is appropriate and the reception signal level at the measurement equipment is within the dynamic range of measurement equipment.

9.6.4.2.2 Stage 2: BS measurement

The NFTR testing procedure consists of the following steps:

1. Align the BS with (Theta, Phi) angles corresponding to the declared conformance direction to be measured.
2. Configure TX branch and carrier according to the manufacturer's declared rated output power.
3. Set the BS to transmit the test signal according to applicable test models.
4. Measure OTA frequency error of each carrier arriving at the measurement equipment (such as a spectrum analyzer or equivalent instrument).
5. Repeat steps 2 - 4 for other applicable test models.

For conformance tests, the OTA frequency error shall be measured at maximum power setting.

9.6.4.3 MU value derivation

The uncertainty in the power accuracy of the OTA test chamber will not affect the frequency error uncertainty.

Possible phase variation in the chamber due to variation in the signal BW is not significant to affect the frequency error measurement uncertainty.

The conducted MU value is adopted for the OTA MU.

9.6.5 Plane Wave Synthesizer

9.6.5.1 Measurement system description

Measurement system description is captured in clause 7.6.1.

9.6.5.2 Test procedure

9.6.5.2.1 Stage 1: Calibration

Calibration procedure for the Plane Wave Synthesizer is captured in clause 8.6.

9.6.5.2.2 Stage 2: BS measurement

As the frequency error is tested together with EVM, the PWS measurement procedure is same with EVM as in clause 9.7.5. The PWS testing procedure consists of the following steps:

1) Align BS with boresight of range antenna.
2) Configure TX branch and carrier according to required test configuration.
3) Measure frequency error of each carrier arriving at the measurement equipment (such as a spectrum analyzer or equivalent instrument).
4) Repeat steps 2 - 3 for all conformance test direction as declared by the manufacturer in TS 37.145-2 [4] or TS 38.141-2 [6].
5) Repeat steps 2 - 4 for all applicable conformance test models.

NOTE: All the discussions above are based on the measurement pre-condition of reference clock synchronized between measurement system with RF frequency signal.

9.6.5.3 MU value derivation

The uncertainty in the power accuracy of the OTA test chamber will not affect the frequency error uncertainty.

Possible phase variation in the chamber due to variation in the signal BW is not significant to affect the frequency error measurement uncertainty.

The conducted MU value is adopted for the OTA MU.

9.6.6 Maximum accepted test system uncertainty

The uncertainty in the power accuracy of the OTA test chamber will not affect the frequency error uncertainty.

Possible phase variation in the chamber due to variation in the signal BW is not significant to affect the frequency error measurement uncertainty. The frequency error MU is ±12 Hz.

The MU for FR1 for frequency error for up to 4.2 GHz was agreed to be the same as for eAAS WI. It is expected that the measurement chamber setup, calibration and measurement procedures and the MU budget will be identical for E-UTRA and NR.

Furthermore, for the frequency range 4.2 – 6 GHz, the chamber and instrument uncertainties are the same as those for the frequency range 3 – 4.2 GHz, assuming testing of a BS designed for operation in licensed spectrum.

For FR2, similarly to FR1, as long as the link budget is sufficient to provide a signal at the test equipment that is within its operating range, then the signal quality requirements MU depends only on the test equipment MU. In the beam center, for a CATR, there is sufficient link budget and thus the MU was decided based on expected test equipment performance.

The MU values are ± 12 Hz for frequency error.

An overview of the MU values for all the requirements is captured in clause 17.

9.6.7 Test Tolerance for frequency error

Considering the methodology described in clause 5.1, Test Tolerance values for frequency error were derived based on values captured in clause 9.6.6.

The TT values were agreed to be the same as the MU values.

Frequency range specific Test Tolerance values for the frequency error test are defined in table 9.6.7-1.

Table 9.6.7-1: Test Tolerance values for frequency error, FR1

	f ≤ 3 GHz	**3 GHz < f ≤ 4.2 GHz**	**4.2 GHz < f ≤ 6 GHz**
Test Tolerance (Hz)	12	12	12

Table 9.6.7-2: Test Tolerance values for frequency error, FR2

	24.25 < f <29.5 GHz	**37 < f <43.5 GHz**	**43.5 < f < 48.2 GHz**
Test Tolerance (Hz)	12	12	12

An overview of the TT values for all the requirements is captured in clause 18.

9.7 OTA transmitted signal quality: EVM

9.7.1 General

Clause 9.7 captures MU and TT values derivation for the OTA EVM directional requirement.

The Error Vector Magnitude (EVM) is defined as measure of the difference between the ideal symbols and the measured symbols after the equalization. This difference is called the error vector. The equaliser parameters are defined in appropriate annex of TS 37.145-2 [4], or TS 38.141-2 [6]. The EVM result is defined as the square root of the ratio of the mean error vector power to the mean reference power expressed in percent.

Although EVM is represented as a % it can also be thought of as a relative power ratio in dBc, when looked at as a power ratio the effect of potential amplitude errors in the OTA chamber can be seen.

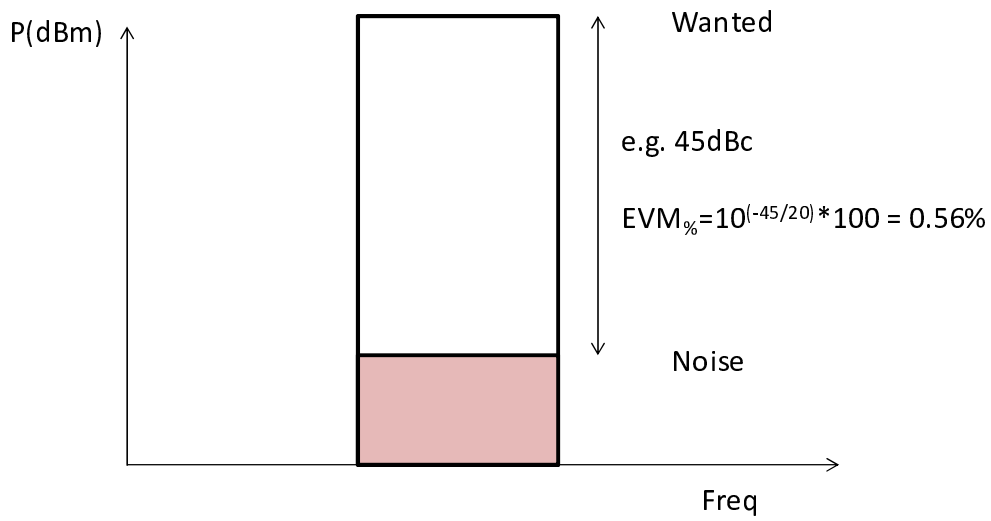

Figure 6.7.1-1: Example of EVM as a power ratio in dB

In the example the co-channel noise is 45 dBc which equates to an EVM of 0.56 %, if the measurement system were to alter the ratio between the wanted signal and the co-channel signal then this would affect the EVM result in %.

9.7.2 Indoor Anechoic Chamber

9.7.2.1 Measurement system description

Measurement system description is captured in clause 7.2.1.

9.7.2.2 Test procedure

9.7.2.2.1 Stage 1: Calibration

Calibration procedure for the Indoor Anechoic Chamber is captured in clause 8.2.

9.7.2.2.2 Stage 2: BS measurement

Reference IAC measurement procedure in clause 9.2.2.2.2 (i.e. EIRP accuracy measurement procedure for Normal test conditions) where in steps 5 - 7 measure the EVM for the applicable test case and the specific test models. In this case, however testing should be carried out in the OTA conformance reference direction, not the *beam peak direction* of the *OTA peak directions set* reference direction.

9.7.2.3 MU value derivation, FR1

As both the wanted signal and the noise signal are at the same frequency they will be measured at the same time the requirement is effectively differential and most of the OTA chamber errors will cancel out.

The wanted signal will be beam formed and hence the errors used for the EIRP accuracy will be valid, however the co-channel noise may not be beam formed and hence could suffer different errors due to the chamber quite zone, and phase profile. These items are included in both the calibration error and the measurement error, as the requirement is differential if there is a difference between the wanted and the unwanted it will only be due to the measurement phase. The calibration errors will cancel as calibration is only done one so they will be the same for both wanted and unwanted signals.

Potentially, the EVM may vary in space due to different patterns of wanted signal and distortion. Thus for narrow beams, it may be possible that beam pointing and alignment errors could impact EVM results.

As EVM is also dependent on the phase of the calibrated path it is possible that phase ripple in the quite zone or elsewhere, which arises due to multipath reflections, may lead to frequency ripple and cause additional EVM errors which do not appear in a power accuracy analysis as done for EIRP accuracy.

The potential impacts of both beam pointing misalignment and scattering within the chamber on the received waveform and measurement accuracy were investigated. The potential deviation in the measured EVM arising from beam pointing errors was examined considering a worst case scenario, in which variation in space of EVM is maximal due to the ideal signal being correlated and the distortion uncorrelated; hence the impact of misalignment error would be the difference between array gain and element gain. Even in this circumstance, alignment errors of several degrees would not lead to a significant error in the measured EVM. Considering all likely chamber sizes, for E-UTRA any scattering would fall within the cyclic prefix of the OFDM symbol and hence not cause ISI. Furthermore, the likely delay spread of any scattering would relate to coherence bandwidths much larger than any UTRA/E-UTRA channel bandwidth. Even if the scattered energy would cause interference, the interference level would anyhow not lead to a significant EVM increase. Thus it was concluded that the impact scattering within the measurement chamber would be negligible.

The uncertainty causing by power variations when measuring OTA EVM is indicated in table 9.7.2.3-1:

Table 9.7.2.3-1: IAC MU value derivation for power uncertainty aspects of OTA EVM, FR1

UID	Uncertainty source	Uncertainty value (dB)			Distribution of the probability	Divisor based on distribution shape	c_i	Standard uncertainty u_i (dB)		
		f < 3 GHz	3 < f < 4.2 GHz	4.2 < f < 6 GHz				f < 3 GHz	3 < f < 4.2 GHz	4.2 < f < 6 GHz
Stage 2: BS measurement										
A1-3	Quality of quiet zone	0.1	0.1	0.1	Gaussian	1	1	0.10	0.10	0.10
A1-6	Phase curvature	0.05	0.05	0.05	Gaussian	1	1	0.05	0.05	0.05
A1-8	Random uncertainty	0.1	0.1	0.1	Rectangular	1.73	1	0.06	0.06	0.06
Stage 1: Calibration measurement										
Combined standard uncertainty (1σ) (dB)								**0.13**	**0.13**	**0.13**
Expanded uncertainty (1.96σ - confidence interval of 95 %) (dB)								**0.25**	**0.25**	**0.25**

The indoor anechoic chamber budget is carried out without consideration of the measurement equipment as this MU is given in %, converting to dB gives, for example:

2% is equivalent to $20*\log_{10}(2/100) = -33.98$ dB

If the unwanted signal is 0.25 dB higher than the wanted due to the test system then this will be degraded to -33.73 dB, and

-33.73 dB is equivalent to: $10^{(-33.73/20)} *100 = 2.06$ %

Additional error due to potential phase error has not been considered however the potential increase due to then OTA test equipment is well within the contribution allowable with a 1 % linear MU.

NOTE: Analysis of the phase uncertainties indicates that the contributions are not significant to affect the final MU value, however if future work indicates that phase or any other errors not related to amplitude calibration may affect the EVM measurement uncertainty the MU analysis may be re-examined.

9.7.3 Compact Antenna Test Range

9.7.3.1 Measurement system description

Measurement system description is captured in clause 7.3.1.

9.7.3.2 Test procedure

9.7.3.2.1 Stage 1: Calibration

Calibration procedure for the Compact Antenna Test Range is captured in clause 8.3.

9.7.3.2.2 Stage 2: BS measurement

Reference CATR measurement procedure in clause 9.2.3.2.2 where in step 6 the appropriate measurement parameter is the EVM for the applicable test case and the specific test models. In this case, however testing should be carried out in the OTA conformance reference direction, not the *beam peak direction* of the *OTA peak directions set* reference direction.

9.7.3.3 MU value derivation, FR1

As both the wanted signal and the noise signal are at the same frequency they will be measured at the same time the requirement is effectively differential and most of the OTA chamber errors will cancel out.

The wanted signal will be beam formed and hence the errors used for the EIRP accuracy will be valid, however the co-channel noise may not be beam formed and hence could suffer different errors due to the chamber quite zone, and phase profile. These items are included in both the calibration error and the measurement error, as the requirement is differential if there is a difference between the wanted and the unwanted it will only be due to the measurement phase. The calibration errors will cancel as calibration is only done one so they will be the same for both wanted and unwanted signals.

Potentially, the EVM may vary in space due to different patterns of wanted signal and distortion. Thus for narrow beams, it may be possible that beam pointing and alignment errors could impact EVM results.

As EVM is also dependent on the phase of the calibrated path it is possible that phase ripple in the quite zone or elsewhere, which arises due to multipath reflections, may lead to frequency ripple and cause additional EVM errors which do not appear in a power accuracy analysis as done for EIRP accuracy.

The potential impacts of both beam pointing misalignment and scattering within the chamber on the received waveform and measurement accuracy were investigated. The potential deviation in the measured EVM arising from beam pointing errors was examined considering a worst case scenario, in which variation in space of EVM is maximal due to the ideal signal being correlated and the distortion uncorrelated; hence the impact of misalignment error would be the difference between array gain and element gain. Even in this circumstance, alignment errors of several degrees would not lead to a significant error in the measured EVM. Considering all likely chamber sizes, for E-UTRA any scattering would fall within the cyclic prefix of the OFDM symbol and hence not cause ISI. Furthermore, the likely delay spread of any scattering would relate to coherence bandwidths much larger than any UTRA/E-UTRA channel bandwidth. Even if the scattered energy would cause interference, the interference level would anyhow not lead to a significant EVM increase. Thus it was concluded that the impact scattering within the measurement chamber would be negligible.

The uncertainty causing by power variations when measuring OTA EVM is indicated in table 9.7.3.3-1:

Table 9.7.3.3-1: CATR MU value derivation for power uncertainty aspects of OTA EVM, FR1

UID	Uncertainty source	Uncertainty value (dB)			Distribution of the probability	Divisor based on distribution shape	c_i	Standard uncertainty u_i (dB)		
		f < 3 G Hz	3 < f < 4.2 GHz	4.2 < f < 6 GHz				f < 3 G Hz	3 < f < 4.2 GHz	4.2 < f < 6 GHz
Stage 2: BS measurement										
A2-2a	Standing wave between BS and test range antenna	0.21	0.21	0.21	U-shaped	1.41	1	0.15	0.15	0.15
A2-4a	QZ ripple experienced by BS	0.09	0.09	0.09	Normal	1	1	0.09	0.09	0.09
Stage 1: Calibration measurement										
Combined standard uncertainty (1σ) (dB)								**0.18**	**0.18**	**0.18**
Expanded uncertainty (1.96σ - confidence interval of 95 %) (dB)								**0.34**	**0.34**	**0.34**

The CATR budget is carried out without consideration of the measurement equipment as this MU is given in %, converting to dB gives, for example:

2% is equivalent to $20*\log_{10}(2/100) = -33.98$ dB

If the unwanted signal is 0.35 dB higher than the wanted due to the test system then this will be degraded to -33.63 dB, and

-33.63 dB is equivalent to: $10^{(-33.63/20)} *100 = 2.08\%$

Additional error due to potential phase error has not been considered however the potential increase due to then OTA test equipment is well within the contribution allowable with a 1% linear MU.

NOTE: Analysis of the phase uncertainties indicates that the contributions are not significant to affect the final MU value, however if future work indicates that phase or any other errors not related to amplitude calibration may affect the EVM measurement uncertainty the MU analysis may be re-examined.

9.7.4 Near Field Test Range

9.7.4.1 Measurement system description

Measurement system description is captured in clause 7.5.1.

In case of OTA EVM type of measurements, NF to FF transform is not needed. EVM is measured in Near Field for the declared directions.

9.7.4.2 Test procedure

9.7.4.2.1 Stage 1: Calibration

Calibration procedure for the Near Field Test Range is captured in clause 8.5.

9.7.4.2.2 Stage 2: BS measurement

The NFTR testing procedure consists of the following steps:

1. Align the BS with (Theta, Phi) angles corresponding to the declared conformance direction to be measured.
2. Configure TX beamforming and carrier according to the manufacturer's declared rated output power.
3. Set the BS to transmit the test signal according to the applicable test model.
4. Measure OTA EVM of each carrier arriving at the measurement equipment (such as a spectrum analyzer or equivalent instrument).

5. Repeat steps 3 - 4 for all conformance test *beam direction pairs* as declared by the manufacturer in TS 37.145-2 [4] or TS 38.141-2 [6].

6. Repeat steps 3 - 5 for other applicable test models.

For conformance tests, EVM shall be measured at maximum and minimum power settings while frequency error, and occupied BW at only maximum power setting.

9.7.4.3 MU value derivation, FR1

EVM is a relative measurement given that the wanted signal and noise signal are at the same frequency and measured at the same time therefore most of the OTA anechoic chamber errors will cancel out.

Nearly all of uncertainty terms for the EVM measurement and EVM calibration are the same and hence EVM is a differential or relative measurement.

Potentially, the EVM may vary in space due to different patterns of wanted signal and distortion. Thus for narrow beams, it may be possible that beam pointing and alignment errors could impact EVM results. The importance and impact of such effects is likely to be even smaller than for far field based measurements.

As EVM is also dependent on the phase of the calibrated path it is possible that phase ripple in the quiet zone or elsewhere, which arises due to multipath reflections, may lead to frequency ripple and cause additional EVM errors which do not appear in a power accuracy analysis as done for EIRP accuracy. Analysis of the effect of such effects is that the effects will be even smaller than for far field based measurements.

The Near Field budget is carried out without consideration of the measurement equipment therefore the MU is given in % and can be converted to dB, for example:

2% is equivalent to $20*\log_{10}(2/100) = -33.98$ dB

If the unwanted signal is 0.35 dB higher than the wanted due to the test system then this will be degraded to -33.63 dB, and

-33.63 dB is equivalent to: $10^{(-33.63/20)} *100 = 2.08\%$

Additional error due to potential phase error has not been considered however the potential increase due to then OTA test equipment is well within the contribution allowable with a 1% linear MU.

For Near Field Test Range a new measurement uncertainty term shall be added to the MU. This term will take into account the fact that in Near Field the phase pattern will sum up so that the signal level is increasing while the noise level is the same. This MU term will only cause an error in the direction of increasing the reported EVM value and not decreasing it, and will depend on the implementation of the BS.

NOTE: Analysis of the phase uncertainties indicates that the contributions are not significant enough to affect the final MU value, however if future work indicates that phase or any other errors not related to amplitude calibration may affect the EVM measurement uncertainty, the MU analysis may need to be re-examined.

9.7.5 Plane Wave Synthesizer

9.7.5.1 Measurement system description

Measurement system description is captured in clause 7.6.1.

9.7.5.2 Test procedure

9.7.5.2.1 Stage 1: Calibration

Calibration procedure for the Plane Wave Synthesizer is captured in clause 8.6.

9.7.5.2.2 Stage 2: BS measurement

Reference PWS measurement procedure in clause 9.4.5.2.2 where in step 4 the appropriate measurement parameter is the EVM for the applicable test case and the specific test models. In this case, however testing should be carried out in the *OTA coverage range* reference direction and *OTA coverage range* maximum directions.

9.7.5.3 MU value derivation, FR1

As both the wanted signal and the noise signal are at the same frequency they will be measured at the same time the requirement is effectively differential and most of the OTA chamber errors will cancel out.

The wanted signal will be beam formed and hence the errors used for the EIRP accuracy will be valid, however the co-channel noise may not be beam formed and hence could suffer different errors due to the chamber quite zone, and phase profile. These items are included in both the calibration error and the measurement error, as the requirement is differential if there is a difference between the wanted and the unwanted it will only be due to the measurement phase. The calibration errors will cancel as calibration is only done one so they will be the same for both wanted and unwanted signals.

Potentially, the EVM may vary in space due to different patterns of wanted signal and distortion. Thus for narrow beams, it may be possible that beam pointing and alignment errors could impact EVM results.

As EVM is also dependent on the phase of the calibrated path it is possible that phase ripple in the quite zone or elsewhere, which arises due to multipath reflections, may lead to frequency ripple and cause additional EVM errors which do not appear in a power accuracy analysis as done for EIRP accuracy.

The potential impacts of both beam pointing misalignment and scattering within the chamber on the received waveform and measurement accuracy were investigated. The potential deviation in the measured EVM arising from beam pointing errors was examined considering a worst case scenario, in which variation in space of EVM is maximal due to the ideal signal being correlated and the distortion uncorrelated; hence the impact of misalignment error would be the difference between array gain and element gain. Even in this circumstance, alignment errors of several degrees would not lead to a significant error in the measured EVM. Considering all likely chamber sizes, for E-UTRA any scattering would fall within the cyclic prefix of the OFDM symbol and hence not cause ISI. Furthermore, the likely delay spread of any scattering would relate to coherence bandwidths much larger than any UTRA/E-UTRA channel bandwidth. Even if the scattered energy would cause interference, the interference level would anyhow not lead to a significant EVM increase. Thus it was concluded that the impact scattering within the measurement chamber would be negligible.

The uncertainty causing by power variations when measuring OTA EVM is indicated in table 9.7.5.3-1:

Table 9.7.5.3-1: PWS MU value derivation for power uncertainty aspects of OTA EVM, FR1

UID	Uncertainty source	Uncertainty value (dB)			Distribution of the probability	Divisor based on distribution shape	c_i	Standard uncertainty u_i (dB)		
		f < 3 G Hz	3 < f < 4.2 GHz	4.2 < f < 6 GHz				f < 3 G Hz	3 < f < 4.2 GHz	4.2 < f < 6 GHz
Stage 2: BS measurement										
A7-2a	Longitudinal position uncertainty (i.e. standing wave and imperfect field synthesis) for BS antenna	0.05	0.14	0.20	Rectangular	1.73	1	0.03	0.08	0.12
A7-4a	QZ ripple experienced by BS	0.42	0.43	0.57	Rectangular	1.73	1	0.24	0.25	0.33
Stage 1: Calibration measurement										
Combined standard uncertainty (1σ) (dB)								**0.24**	**0.26**	**0.35**
Expanded uncertainty (1.96σ - confidence interval of 95 %) (dB)								**0.48**	**0.51**	**0.68**

The PWS budget is carried out without consideration of the measurement equipment as this MU is given in %, converting to dB gives, for example:

2% is equivalent to $20*\log_{10}(2/100) = -33.98$ dB

If the unwanted signal is 0.5 dB higher than the wanted due to the test system then this will be degraded to -33.48 dB, and

-33.48 dB is equivalent to: $10^{(-33.48/20)} *100 = 2.12\%$

Additional error due to potential phase error has not been considered however the potential increase due to then OTA test equipment is well within the contribution allowable with a 1% linear MU.

NOTE: Analysis of the phase uncertainties indicates that the contributions are not significant to affect the final MU value, however if future work indicates that phase or any other errors not related to amplitude calibration may affect the EVM measurement uncertainty the MU analysis may be re-examined.

9.7.6 Maximum accepted test system uncertainty

Without consideration of any phase uncertainty, the amplitude error analysis shows the conducted MU of 1% can be maintained for the OTA MU (subject to the clarification noted in the limitations clause that the reported EVM may be greater than the real EVM due to the difference between near field and far field EVM values. The extent of such a difference is dependent on the architecture of the BS).

NOTE: Analysis of the phase uncertainties indicates that the contributions are not significant to affect the final MU value, however if future work indicates that phase or any other errors not related to amplitude calibration may affect the EVM measurement uncertainty the MU analysis may be re-examined.

The MU for FR1 for EVM below 4.2 GHz was agreed to be the same as for eAAS WI. It is expected that the measurement chamber setup, calibration and measurement procedures and the MU budget will be identical for E-UTRA and NR.

Furthermore, for the frequency range 4.2 – 6 GHz, the chamber and instrument uncertainties are the same as those for the frequency range 3 – 4.2 GHz, assuming testing of a BS designed for operation in licensed spectrum.

For FR2, similarly to FR1, as long as the link budget is sufficient to provide a signal at the test equipment that is within its operating range, then the signal quality requirements MU depends only on the test equipment MU. In the beam center, for a CATR, there is sufficient link budget and thus the MU was decided based on expected test equipment performance.

The MU values are 1% for EVM.

An overview of the MU values for all the requirements is captured in clause 17.

9.7.7 Test Tolerance for EVM

Considering the methodology described in clause 5.1, Test Tolerance values for EVM were derived based on values captured in clause 9.7.6.

The TT values were agreed to be the same as the MU values.

Frequency range specific Test Tolerance values for the EVM test are defined in table 9.7.7-1.

Table 9.7.7-1: Test Tolerance values for EVM, FR1

	f ≤ 3 GHz	**3 GHz < f ≤ 4.2 GHz**	**4.2 GHz < f ≤ 6 GHz**
Test Tolerance (%)	1	1	1

Table 9.7.7-2: Test Tolerance values for EVM, FR2

	24.25 < f < 29.5 GHz	**37 < f < 43.5 GHz**	**43.5 < f < 48.2 GHz**
Test Tolerance (%)	1	1	1

An overview of the TT values for all the requirements is captured in clause 18.

9.8 OTA transmitted signal quality: TAE

9.8.1 General

Clause 9.8 captures MU and TT values derivation for the OTA TAE directional requirement.

TAE is the timing difference between 2 modulated signals, either TX diversity, MIMO or CA carriers. Conducted TAE is measured as follows:

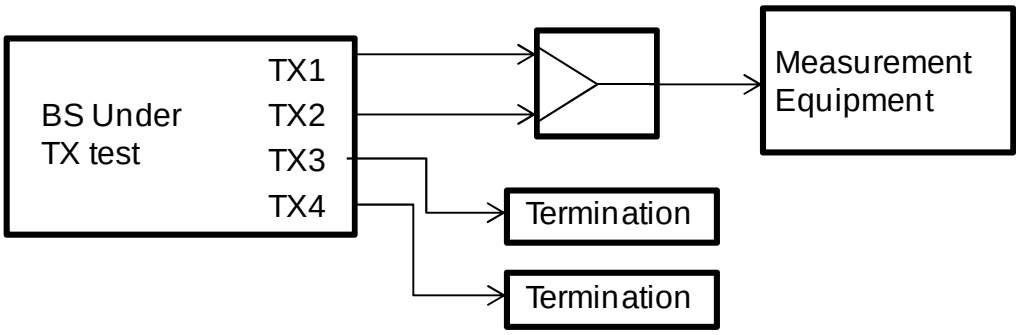

Figure 9.8.1-1: Conducted TAE measurement set up

As the conducted signals are combined before being input to the test equipment the OTA test is simple to implement.

Figure 9.8.1-2: OTA TAE measurement set up

The OTA signals are both transmitted from the BS and added at the test receive antenna. As the test paths for the 2 signals are identical there are no additional timing errors added to the test system compared to the conducted test system.

As the TAE requirement is a measure of timing difference it is not affected by the accuracy of the test system amplitude calibration and measurement uncertainties.

As long as the signals fed into the measurement equipment are of a sufficient amplitude then the only measurement uncertainty will be that of the measurement equipment itself.

The measurement equipment requires a level of > -20 dBm to accurately carry out the TAE.

As the requirement is done for the wanted beam at full power, even for low power BS it is not anticipated the received test signal will be lower than -10 dBm.

There may be a tiny impact to signal fidelity due to scattering in the chamber, however this will be insignificant and is not expected to impact TAE.

As the OTA test system does not affect the measurement accuracy for TAE the existing conducted MU can be used.

9.8.2 Indoor Anechoic Chamber

9.8.2.1 Measurement system description

Measurement system description is captured in clause 7.2.1.

9.8.2.2 Test procedure

9.8.2.2.1 Stage 1: Calibration

Calibration procedure for the Indoor Anechoic Chamber is captured in clause 8.2.

9.8.2.2.2 Stage 2: BS measurement

Reference IAC measurement procedure in clause 9.2.2.2.2 (i.e. EIRP accuracy measurement procedure for Normal test conditions) where in steps 5 - 7 the appropriate measurement parameter is TAE. In this case, however testing should be carried out in the OTA conformance reference direction, not the *beam peak direction* of the *OTA peak directions set* reference direction.

9.8.2.3 MU value derivation

The uncertainty in the power accuracy of the OTA test chamber will not affect the TAE measurement uncertainty.

Possible phase variation in the chamber due to variation in the signal BW is not significant to affect the TAE measurement uncertainty.

The conducted MU value is adopted for the OTA MU.

9.8.3 Compact Antenna Test Range

9.8.3.1 Measurement system description

Measurement system description is captured in clause 7.3.1.

9.8.3.2 Test procedure

9.8.3.2.1 Stage 1: Calibration

Calibration procedure for the Compact Antenna Test Range is captured in clause 8.3.

9.8.3.2.2 Stage 2: BS measurement

Reference CATR measurement procedure in clause 9.2.3.2.2 where in steps 4 - 6 the appropriate measurement parameter is TAE. In this case, however testing should be carried out in the OTA conformance reference direction, not the *beam peak direction* of the *OTA peak directions set* reference direction.

The testing procedure consists of the following steps:

1) Align BS with boresight of the range antenna.

2) Configure BS to transmit signals carrying reference signals. All beams must be pointed at the same direction.

NOTE: The transmitted signals should represent the beam configuration with the lowest number of beams. Each beam should be identifiable using a reference signal.

- For a BS declared to be capable of single carrier operation only, set BS to transmit according to rated beam EIRP level.

- If the BS supports intra band contiguous or non-contiguous Carrier Aggregation, set BS to transmit using the applicable test configuration and corresponding power setting specified in TS 37.145-2 [4] for AAS BS, or in TS 38.141-2 [6] for NR BS.

- If the BS supports inter band carrier aggregation, set BS to transmit, for each band, a single carrier or all carriers, using the applicable test configuration and corresponding power setting specified in TS 37.145-2 [4] for AAS BS, or in TS 38.141-2 [6] for NR BS.

3) Measure TAE between the reference signals with signal/spectrum analyser or equivalent equipment.

9.8.3.3 MU value derivation

The uncertainty in the power accuracy of the OTA test chamber will not affect the TAE measurement uncertainty.

Possible phase variation in the chamber due to variation in the signal BW is not significant to affect the TAE measurement uncertainty.

The conducted MU value is adopted for the OTA MU.

9.8.4 Near Field Test Range

9.8.4.1 Measurement system description

Measurement system description is captured in clause 7.5.1.

In case of OTA TAE type of measurements, NF to FF transform is not needed. TAE is measured in Near Field for the declared direction.

9.8.4.2 Test procedure

9.8.4.2.1 Stage 1: Calibration

Calibration procedure for the Near Field Test Range is captured in clause 8.5.

9.8.4.2.2 Stage 2: BS measurement

The NFTR testing procedure consists of the following steps:

1) Align the BS with (Theta, Phi) angles corresponding to the declared conformance direction to be measured

2) Configure BS to transmit signals carrying reference signals. All beams must be pointed at the same direction.

NOTE: The transmitted signals should represent the beam configuration with the lowest number of beams. Each beam should be identifiable using a reference signal.

- For a BS declared to be capable of single carrier operation only, set BS to transmit according to rated beam EIRP level.

- If the BS supports intra band contiguous or non-contiguous Carrier Aggregation, set BS to transmit using the applicable test configuration and corresponding power setting specified in TS 37.145-2 [4] for AAS BS, or in TS 38.141-2 [6] for NR BS.

- If the BS supports inter band carrier aggregation, set BS to transmit, for each band, a single carrier or all carriers, using the applicable test configuration and corresponding power setting specified in TS 37.145-2 [4] for AAS BS, or in TS 38.141-2 [6] for NR BS.

3) Measure the TAE between the reference signals with signal/spectrum analyser or equivalent equipment.

9.8.4.3 MU value derivation

Refer to clause 9.8.3.3 for the OTA TAE measurement in CATR.

9.8.4A Plane Wave Synthesizer

9.8.4A.1 Measurement system description

Measurement system description is captured in clause 7.6.

9.8.4A.2 Test procedure

9.8.4A.2.1 Stage 1: Calibration

Calibration procedure for the Plane Wave Synthesizer is captured in clause 8.6.

9.8.4A.2.2 Stage 2: BS measurement

Reference PWS measurement procedure in clause 9.2.6.2.2 where in steps 3 - 5 the appropriate measurement parameter is TAE. In this case, however testing should be carried out in the OTA conformance reference direction, not the *beam peak direction* of the *OTA peak directions set* reference direction.

The testing procedure consists of the following steps:

1) Align BS with boresight of the range antenna.

2) Configure BS to transmit signals carrying reference signals. All beams must be pointed at the same direction.

NOTE: The transmitted signals should represent the beam configuration with the lowest number of beams. Each beam should be identifiable using a reference signal.

- For a BS declared to be capable of single carrier operation only, set BS to transmit according to rated beam EIRP level.

- If the BS supports intra band contiguous or non-contiguous Carrier Aggregation, set BS to transmit using the applicable test configuration and corresponding power setting specified in TS 37.145-2 [4] for AAS BS, or in TS 38.141-2 [6] for NR BS.

- If the BS supports inter band carrier aggregation, set BS to transmit, for each band, a single carrier or all carriers, using the applicable test configuration and corresponding power setting specified in TS 37.145-2 [4] for AAS BS, or in TS 38.141-2 [6] for NR BS.

3) Measure TAE between the reference signals with signal/spectrum analyser or equivalent equipment.

9.8.4A.3 MU value derivation

The uncertainty in the power accuracy of the OTA test chamber will not affect the TAE measurement uncertainty.

Possible phase variation in the chamber due to variation in the signal BW is not significant to affect the TAE measurement uncertainty.

The conducted MU value is adopted for the OTA MU.

9.8.5 Maximum accepted test system uncertainty

The uncertainty in the power accuracy of the OTA test chamber will not affect the TAE measurement uncertainty.

Possible phase variation in the chamber due to variation in the signal BW is not significant to affect the TAE measurement uncertainty.

The conducted MU value is adopted for the OTA MU, and is ±25 ns.

The MU for FR1 for TAE up to 4.2 GHz was agreed to be the same as for eAAS WI. It is expected that the measurement chamber setup, calibration and measurement procedures and the MU budget will be identical for E-UTRA and NR.

Furthermore, for the frequency range 4.2 – 6 GHz, the chamber and instrument uncertainties are the same as those for the frequency range 3 – 4.2 GHz, assuming testing of a BS designed for operation in licensed spectrum.

For FR2, similarly to FR1, as long as the link budget is sufficient to provide a signal at the test equipment that is within its operating range, then the signal quality requirements MU depends only on the test equipment MU. In the beam center, for a CATR, there is sufficient link budget and thus the MU was decided based on expected test equipment performance.

The MU values are 25 ns for time alignment error.

An overview of the MU values for all the requirements is captured in clause 17.

9.8.6 Test Tolerance for TAE

Considering the methodology described in clause 5.1, Test Tolerance values for TAE were derived based on values captured in clause 9.8.5.

The TT values were agreed to be the same as the MU values.

Frequency range specific Test Tolerance values for the TAE test are defined in table 9.8.6-1 and 9.8.6-2.

Table 9.8.6-1: Test Tolerance values for TAE, FR1

	f ≤ 3 GHz	**3 GHz < f ≤ 4.2 GHz**	**4.2 GHz < f ≤ 6 GHz**
Test Tolerance (ns)	25	25	25

Table 9.8.6-2: Test Tolerance values for TAE, FR2

	24.25 < f <29.5 GHz	**37 < f <43.5 GHz**	**43.5 < f < 48.2 GHz**
Test Tolerance (ns)	25	25	25

An overview of the TT values for all the requirements is captured in clause 18.

9.9 OTA occupied bandwidth

9.9.1 General

Clause 9.9 captures MU and TT values derivation for the OTA occupied bandwidth directional requirement.

It is defined as the occupied bandwidth is the width of a frequency band such that, below the lower and above the upper frequency limits, the mean powers emitted are each equal to a specified percentage β/2 of the total mean transmitted power.

Occupied BW is specified in Hz.

It is measured by taking a number of narrow band power measurements across the modulated BW and finding the half power level and hence the frequency points which correspond to the half power level. The measurement is effectively a differential measurement as total power and hence half power is found from the measured data.

The only effect the measurement chamber would have on the accuracy of the measurement were if the frequency response of the chamber were not flat, however a 40 MHz BW is unlikely to introduce any significant frequency ripple in a RF chamber (40 MHz is 4% of 1 GHz) so this effect can be ignored.

The largest error it is due to the number of measurement points taken, looking at the gap between points compared to the conducted MU:

Table 9.9.1-1: Occupied BW conducted MU

Channel bandwidth $BW_{Channel}$ (MHz)	0.2	1.4	3	5	10	15	20	>20
Span (MHz)	0.4	10	10	10	20	30	40	$2 \times BW_{Channel\_CA}$
Minimum number of measurement points	400	1429	667	400	400	400	400	$\left\lceil \frac{2 \times BW_{Channel\_CA}}{100kHz} \right\rceil$
Gap between samples (MHz)	0.001	0.01	0.01	0.025	0.05	0.075	0.1	0.1
Conducted MU (MHz)		0.03	0.03	0.1	0.1	0.3	0.3	0.3

The MU is 3 to 4 time larger than the distance between the measurement points. Which allows the estimation of the 3dB point to be 1.5 to 2 steps out on each side of the modulated band width.

As the OTA system will not introduce any additional frequency error and it will not introduce any additional differential amplitude error, the MU for the OTA measurement should be the same as for the conducted requirement.

It should be noted that the signal power level at the bandwidth edge required for meeting the OBW requirement is in general at least 20dB higher than the level that is required to meet unwanted emissions requirements. Thus there is very substantial room to accommodate measurement uncertainty for the OBW requirement.

9.9.2 Indoor Anechoic Chamber

9.9.2.1 Measurement system description

Measurement system description is captured in clause 7.2.1.

9.9.2.2 Test procedure

9.9.2.2.1 Stage 1: Calibration

Calibration procedure for the Indoor Anechoic Chamber is captured in clause 8.2.

9.9.2.2.2 Stage 2: BS measurement

Reference IAC procedure in clause 9.2.2.2.2 (i.e. EIRP accuracy measurement procedure for Normal test conditions) where in step 5 - 7 the appropriate measurements needed for calculating occupied bandwidth.

9.9.2.3 MU value derivation

The MU value is the same as the conducted value given in table 9.9.1-1.

9.9.3 Compact Antenna Test Range

9.9.3.1 Measurement system description

Measurement system description is captured in clause 7.3.1.

9.9.3.2 Test procedure

9.9.3.2.1 Stage 1: Calibration

Calibration procedure for the Compact Antenna Test Range is captured in clause 8.3.

9.9.3.2.2 Stage 2: BS measurement

The CATR testing procedure consists of the following steps:

1) Configure transmitter according to the manufacturer's declared EIRP at rated TRP.
2) Set the BS to transmit the test signal according to applicable test model for the tested carrier BW.
3) Align BS such that *beam peak direction* of probe antenna is aligned with the reference direction within the *OTA coverage range*.
4) Measure the OTA occupied BW for a single carrier positioned at M channel.

9.9.3.3 MU value derivation

The MU value is the same as the conducted value given in table 9.9.1-1.

9.9.4 Near Field Test Range

9.9.4.1 Measurement system description

Measurement system description is captured in clause 7.5.1.

In case of OTA occupied BW type of measurements, NF to FF transform is not needed. Occupied BW is measured in Near Field for the declared direction.

9.9.4.2 Test procedure

9.9.4.2.1 Stage 1: Calibration

Calibration procedure for the Near Field Test Range is captured in clause 8.5.

9.9.4.2.2 Stage 2: BS measurement

The NFTR testing procedure consists of the following steps:

1) Align the BS with (Theta, Phi) angles corresponding to the declared *beam peak direction* to be measured.
2) Configure TX branch and carrier according to the manufacturer's declared rated output power.
3) Set the BS to transmit the test signal according to the applicable test model.
4) Measure OTA occupied BW of each carrier arriving at the measurement equipment (such as a spectrum analyzer or equivalent instrument).
5) Repeat steps 3 - 4 for other applicable test models.

For conformance tests, the OTA occupied BW shall be measured at maximum power setting.

9.9.4.3 MU value derivation

The MU value is the same as the conducted value given in table 9.9.1-1.

9.9.5 Plane Wave Synthesizer

9.9.5.1 Measurement system description

Measurement system description is captured in clause 7.6.1.

9.9.5.2 Test procedure

9.9.5.2.1 Stage 1: Calibration

Calibration procedure for the Plane Wave Synthesizer is captured in clause 8.6.

9.9.5.2.2 Stage 2: BS measurement

The PWS testing procedure consists of the following steps:

1) Configure transmitter according to the manufacturer's declared EIRP at rated TRP.
2) Set the BS to transmit the test signal according to applicable test model for the tested carrier BW.
3) Align BS such that *beam peak direction* of probe antenna is aligned with the reference direction within the *OTA coverage range*.
4) Measure the OTA occupied BW for a single carrier positioned at M channel.

9.9.5.3 MU value derivation

The MU value is the same as the conducted value given in table 9.9.1-1.

9.9.6 Maximum accepted test system uncertainty

For E-UTRA, the OTA occupied BW MU is the same as the conducted MU and is as follows:

- 1.4 MHz, 3 MHz Channel BW: 30 kHz
- 5 MHz, 10 MHz Channel BW: 100 kHz
- 15 MHz, ≥20 MHz: Channel BW: 300 kHz

For NR in FR1, the MU for the OTA occupied bandwidth depends on the roll-off of the transmitted signal and the instrument MU, not on the OTA chamber related MU. In principle, the occupied bandwidth MU was agreed to be the same as for E-UTRA. However NR covers larger BS channel bandwidths than E-UTRA, and thus additional MU relating to larger channel bandwidths were estimated. The MU was decided based on the density of power measurements within the channel bandwidth and the expected test instrument performance.

For NR in FR1, the MU was agreed to be:

± 100 kHz for BS channel bandwidths up to 10 MHz,

± 300 kHz for 10 MHz < BS channel bandwidth ≤ 50 MHz, and

± 300 kHz for 50 MHz < BS channel bandwidths ≤ 100 MHz.

For NR in FR2, based on expected test equipment performance, the MU for occupied bandwidth was decided to be:

± 600 kHz (same as for FR1 for channel bandwidths greater than 50 MHz).

For NR in FR2, similarly to FR1, as long as the link budget is sufficient to provide a signal at the test equipment that is within its operating range, then the occupied bandwidth MU depends only on the test equipment MU. In the beam center, for a CATR, there is sufficient link budget and thus the MU was decided based on expected test equipment performance, considering the agreed density of power measurements in the frequency domain.

An overview of the MU values for all the requirements is captured in clause 17.

9.9.7 Test Tolerance for OTA occupied bandwidth

Considering the methodology described in clause 5.1, Test Tolerance values for OTA occupied bandwidth were derived based on values captured in clause 9.9.6.

For NR in FR1 as well as in FR2, the TT value was agreed to be 0 Hz.

Frequency range specific Test Tolerance values for the OTA occupied bandwidth test are defined in tables 9.9.7-1 and 9.9.7-2.

Table 9.9.7-1: Test Tolerance values for the EIRP accuracy in Normal test conditions, FR1

	f ≤ 3 GHz	3 GHz < f ≤ 4.2 GHz	4.2 GHz < f ≤ 6 GHz
Test Tolerance (Hz)	0	0	0

Table 9.9.7-2: Test Tolerance values for the EIRP accuracy in Normal test conditions, FR2

	24.25 < f <29.5 GHz	37 < f <43.5 GHz	43.5 < f < 48.2 GHz
Test Tolerance (Hz)	0	0	0

An overview of the TT values for all the requirements is captured in clause 18.

9.10 OTA TX OFF power and transmitter transient period

9.10.1 General

Clause 9.10 captures MU and TT values derivation for the OTA TX OFF power and transmitter transient period directional requirements in FR2.

This clause is only applicable to the NR operation in FR2.

OTA TX OFF power and transmitter transient period for FR1 is a co-location requirement is and captured in clause 10.6.2.

9.10.2 Compact Antenna Test Range

9.10.2.1 Measurement system description

The MU assessment was carried out using a CATR chamber only. However other chamber types are not precluded if suitable MU assessment is done.

Measurement system description is captured in clause 7.3.1.

9.10.2.2 Test procedure

9.10.2.2.1 Stage 1: Calibration

Calibration procedure for the Compact Antenna Test Range is captured in clause 8.3.

9.10.2.2.2 Stage 2: BS measurement

NOTE: CATR-specific test procedure was not provided at the time of creation of this TR. Refer appropriate test procedure for BS type 2-O in TS 38.141-2, clause 6.5.2.4.2.1 with FR2 specific procedure steps in TS 38.141-2, clause 6.5.2.4.2.3.

9.10.2.3 MU value derivation, FR2

The MU assessment was carried out using a CATR chamber only. However other chamber types are not precluded if suitable MU assessment is done.

The CATR test setup and calibration and measurement procedures for FR2 are expected to be similar to those of FR1, although the test chamber dimensions and associated MU values will scale due to the shorter wavelengths and larger relative array apertures. However, it is noted that in order to achieve the test instrument uncertainties that were assumed, calibration of the spectrum analyzer may be needed.

Table 9.10.2.3-1: CATR uncertainty assessment for EIRP measurements for transmitter OFF power and transmitter transient period

UID	Uncertainty source	Uncertainty value		Distribution of the probability	Divisor based on distribution shape	c_i	Standard uncertainty u_i (dB)	
		24.25 < f ≤ 29.5 GHz	37 < f ≤ 43.5 GHz				24.25 < f ≤ 29.5 GHz	37 < f ≤ 43.5 GHz
Stage 2: BS measurement								
A2-1a	Misalignment and pointing error of BS (for EIRP)	0.20	0.20	Exp. normal	2.00	1	0.10	0.10
C1-9	Uncertainty of the RF power measurement equipment standard uncertainty σ (dB) of the absolute level for a time domain wideband measurement for FR2	1.25	1.45	Gaussian	1.00	1	1.25	1.45
A2-2a	Standing wave between BS and test range antenna	0.03	0.03	U-shaped	1.41	1	0.02	0.02
A2-3	RF leakage (SGH connector terminated & test range antenna connector cable terminated)	0.01	0.01	Gaussian	1.00	1	0.01	0.01
A2-4a	QZ ripple experienced by BS	0.40	0.40	Gaussian	1.00	1	0.40	0.40
A2-12	Frequency flatness of test system	0.25	0.25	Gaussian	1.00	1	0.25	0.25
Stage 1: Calibration measurement								
C1-3	Uncertainty of the network analyzer	0.30	0.30	Gaussian	1.00	1	0.30	0.30
A2-5b	Mismatch of receiver chain for low power receiver	0.72	0.72	U-shaped	1.41	1	0.51	0.51
A2-6	Insertion loss of receiver chain	0.00	0.00	Rectangular	1.73	1	0.00	0.00
A2-3	RF leakage (SGH connector terminated & test range antenna connector cable terminated)	0.01	0.01	Gaussian	1.00	1	0.01	0.01
A2-7	Influence of the calibration antenna feed cable	0.21	0.29	U-shaped	1.41	1	0.15	0.21
C1-4	Uncertainty of the absolute gain of the reference antenna	0.52	0.52	Rectangular	1.73	1	0.30	0.30
A2-8	Misalignment positioning system	0.00	0.00	Exp. normal	2.00	1	0.00	0.00
A2-1b	Misalignment and pointing error of calibration antenna (for EIRP)	0.00	0.00	Exp. normal	2.00	1	0.00	0.00
A2-9	Rotary joints	0.00	0.00	U-shaped	1.41	1	0.00	0.00
A2-2b	Standing wave between calibration antenna and test range antenna	0.09	0.09	U-shaped	1.41	1	0.06	0.06
A2-4b	QZ ripple experienced by calibration antenna	0.01	0.01	Gaussian	1.00	1	0.01	0.01
A2-11	Switching uncertainty	0.10	0.10	Rectangular	1.73	1	0.06	0.06
Combined standard uncertainty (1σ) (dB)							**1.50**	**1.68**
Expanded uncertainty (1.96σ – confidence interval of 95 %) (dB)							**2.95**	**3.29**

9.10.3 Maximum accepted test system uncertainty

The MU assessment was carried out using a CATR chamber only. However other chamber types are not precluded if suitable MU assessment is done.

Table 9.10.3-1: Maximum accepted test system uncertainty values for the EIRP accuracy, FR2

	24.25 < f < 29.5 GHz	37 < f < 43.5 GHz	43.5 < f < 48.2 GHz
Maximum accepted test system uncertainty (dB)	2.9	3.3	3.6 (NOTE)
NOTE: MU estimation for 43.5 < f < 48.2 GHz was derived based on the linear approximation (based on MU values for lower frequency ranges). MU extrapolation approach was used instead of the typical derivation of the Expanded MU based on the MU budget calculations, as in case of lower frequency ranges.			

9.10.4 Test Tolerance for OTA TX OFF power and transmitter transient period

Considering the methodology described in clause 5.1, Test Tolerance values for OTA TX OFF power and transmitter transient period were derived based on values captured in clause 9.10.3.

The TT value was agreed to be the same as the MU.

Frequency range specific Test Tolerance values for the OTA TX OFF power and transmitter transient period test are defined in table 9.10.4-1.

Table 9.10.4-1: Test Tolerance values for the EIRP accuracy, FR2

	24.25 < f < 29.5 GHz	37 < f < 43.5 GHz	43.5 < f < 48.2 GHz
Test Tolerance (dB)	2.9	3.3	3.6

An overview of the TT values for all the requirements is captured in clause 18.

10 RX directional requirements

10.1 General

RX in-band directional requirements all use a wanted signal at a specified EIS power level and throughput/BER quality metric. Requirements which also include an in-band interferer have the wanted signal and the interferer coming from the same direction within the specified RoAoA.

For simplicity since OTA requirements do not all use the same RAT-specific test models nor the same reference measurement channels, the OTA test procedures have been kept general by using "applicable test signal" and "applicable reference measurement channel" where the RAT-specific test model and reference measurement channels can be found in AAS BS or NR BS test specifications TS 37.145-2 [4] and TS 38.141-2 [6].

NOTE 1: All the calibration and test procedures are valid for FR1 as well as FR2, unless otherwise stated.

NOTE 2: All the MU and TT values derivations are valid for Normal test conditions, unless otherwise stated.

For wanted signal frequency above 4.2 GHz in FR1 (4.2 GHz < f ≤ 6 GHz), it has been agreed that MU are obtained as:

$$MU_{EIS4.2-6GHz} = \sqrt{MU^2_{EIS3-4.2GHz} - MU^2_{TestEquipment3-4.2GHz} + MU^2_{TestEquipment4.2-6GHz} - MU^2_{Matching3-4.2GHz} + MU^2_{Matching4.2-6GHz}}$$

$$MU_{conductedwanted4.2-6GHz} = \sqrt{MU^2_{conductedwanted3-4.2GHz} - MU^2_{TestEquipment3-4.2GHz} + MU^2_{TestEquipment4.2-6GHz} - MU^2_{Matching3-4.2GHz} + MU^2_{Matching4.2-6GHz}}$$

$$MU_{conductedint4.2-6GHz} = \sqrt{MU^2_{conductedint3-4.2GHz} - MU^2_{TestEquipment3-4.2GHz} + MU^2_{TestEquipment4.2-6GHz} - MU^2_{Matching3-4.2GHz} + MU^2_{Matching4.2-6GHz}}$$

With

$$MU_{TestEquipment4.2-6GHz}(1.96\sigma) = 1.96 \times 0.58$$

And

$$MU_{Matching4.2-6GHz}(1.96\sigma) = 1.96 \times 0.28$$

10.2 OTA sensitivity

10.2.1 General

Clause 10.2 captures MU and TT values derivation for the OTA sensitivity directional requirement.

10.2.2 Indoor Anechoic Chamber

10.2.2.1 Measurement system description

Measurement system description is captured in clause 7.2.1.

10.2.2.2 Test procedure

10.2.2.2.1 Stage 1: Calibration

Calibration procedure for the Indoor Anechoic Chamber is captured in clause 8.2 with the calibration system setup for RX requirements depicted in figure 8.2-2.

10.2.2.2.2 Stage 2: BS measurement

The IAC testing procedure consists of the following steps:

1) Uninstall the reference antenna and install the BS with its manufacturer declared coordinate system reference point in the same place as the phase centre of the reference antenna. The manufacturer declared coordinate system orientation of the BS is set to be aligned with testing system.

2) Set the BS to be satisfied with the *sensitivity RoAoA* covering conformance testing receiving direction.

3) Rotate the BS to make the conformance testing receiving direction aligned with the *beam peak direction* of the reference antenna at the calibration stage.

4) For FDD, start BS transmission using applicable test model at manufacturer's declared rated output power.

5) Set the test signal mean power at the RF signal source generator as the declared minimum EIS level plus $L_{cal, A\rightarrow D}$ (as defined in clause 8.2) and applicable reference measurement channel .

6) Measure the throughput.

7) Repeat the above steps 2 ~ 6 per conformance testing direction.

10.2.2.3 MU value derivation, FR1

Table 10.2.2.3-1 captures derivation of the expanded measurement uncertainty values for OTA sensitivity measurements in Indoor Anechoic Chamber (Normal test conditions, FR1).

Table 10.2.2.3-1: IAC MU value derivation for OTA sensitivity measurement, FR1

UID	Uncertainty source	Uncertainty value (dB)			Distribution of the probability	Divisor based on distribution shape	c_i	Standard uncertainty u_i (dB)		
		f ≤ 3 GHz	3 < f ≤ 4.2 GHz	4.2 < f ≤ 6 GHz				f ≤ 3 GHz	3 < f ≤ 4.2 GHz	4.2 < f ≤ 6 GHz
Stage 2: BS measurement										
B1-1	Positioning misalignment between the BS and the reference antenna	0.03	0.03	0.03	Rectangular	1.73	1	0.02	0.02	0.02
B1-2	Pointing misalignment between the BS and the transmitting antenna	0.30	0.30	0.30	Rectangular	1.73	1	0.17	0.17	0.17
B1-3	Quality of quiet zone	0.10	0.10	0.10	Gaussian	1.00	1	0.10	0.10	0.10
B1-4a	Polarization mismatch between the BS and the transmitting antenna	0.01	0.01	0.01	Rectangular	1.73	1	0.01	0.01	0.01
B1-5a	Mutual coupling between the BS and the transmitting antenna	0.00	0.00	0.00	Rectangular	1.73	1	0.00	0.00	0.00
B1-6	Phase curvature	0.05	0.05	0.05	Gaussian	1.00	1	0.05	0.05	0.05
C1-2	Uncertainty of the RF signal generator	0.46	0.46	0.46	Gaussian	1.00	1	0.46	0.46	0.46
B1-7	Impedance mismatch in the transmitting chain	0.14	0.23	0.23	U-shaped	1.41	1	0.10	0.16	0.16
B1-8	Random uncertainty	0.10	0.10	0.10	Rectangular	1.73	1	0.06	0.06	0.06
Stage 1: Calibration measurement										
B1-9	Impedance mismatch between the transmitting antenna and the network analyzer	0.05	0.05	0.05	U-shaped	1.41	1	0.04	0.04	0.04
B1-10	Positioning and pointing misalignment between the reference antenna and the transmitting antenna	0.01	0.01	0.01	Rectangular	1.73	1	0.01	0.01	0.01
B1-11	Impedance mismatch between the reference antenna and network analyzer	0.05	0.05	0.05	U-shaped	1.41	1	0.04	0.04	0.04
B1-3	Quality of quiet zone	0.10	0.10	0.10	Gaussian	1.00	1	0.10	0.10	0.10
B1-4b	Polarization mismatch between the reference antenna and the transmitting antenna	0.01	0.01	0.01	Rectangular	1.73	1	0.01	0.01	0.01
B1-5b	Mutual coupling between the reference antenna and the transmitting antenna	0.00	0.00	0.00	Rectangular	1.73	1	0.00	0.00	0.00
B1-6	Phase curvature	0.05	0.05	0.05	Gaussian	1.00	1	0.05	0.05	0.05
C1-3	Uncertainty of the network analyzer	0.13	0.20	0.20	Gaussian	1.00	1	0.13	0.20	0.20
B1-12	Influence of the reference antenna feed cable	0.05	0.05	0.05	Rectangular	1.73	1	0.03	0.03	0.03
B1-13	Reference antenna feed cable loss measurement uncertainty	0.06	0.06	0.06	Gaussian	1.00	1	0.06	0.06	0.06
B1-14	Influence of the transmitting antenna feed cable	0.05	0.05	0.05	Rectangular	1.73	1	0.03	0.03	0.03
C1-4	Uncertainty of the absolute gain of the reference antenna	0.50	0.43	0.43	Rectangular	1.73	1	0.29	0.25	0.25
B1-15	Uncertainty of the absolute gain of the transmitting antenna	0.00	0.00	0.00	Rectangular	1.73	1	0.00	0.00	0.00

Combined standard uncertainty (1σ) (dB)	**0.62**	**0.64**	**0.64**
Expanded uncertainty (1.96σ - confidence interval of 95 %) (dB)	**1.22**	**1.25**	**1.25**

10.2.2.4 MU value derivation, FR2

Table 10.2.2.4-1 captures derivation of the expanded measurement uncertainty values for OTA sensitivity measurements in Indoor Anechoic Chamber (Normal test conditions, FR2).

Table 10.2.2.4-1: IAC MU value derivation for OTA sensitivity measurement, FR2

UID	Uncertainty source	Uncertainty value		Distribution of the probability	Divisor based on distribution shape	c_i	Standard uncertainty u_i (dB)	
		24.25 < f < 29.5 GHz	37 < f < 43.5 GHz				24.25 < f < 29.5 GHz	37 < f < 43.5 GHz
Stage 2: BS measurement								
B1-1	Positioning misalignment between the BS and the reference antenna	0.18	0.18	Rectangular	1.73	1	0.10	0.10
B1-2	Pointing misalignment between the BS and the transmitting antenna	0.18	0.18	Rectangular	1.73	1	0.10	0.10
B1-3	Quality of quiet zone	0.10	0.10	Gaussian	1.00	1	0.10	0.10
B1-4a	Polarization mismatch between the BS and the transmitting antenna	0.02	0.02	Rectangular	1.73	1	0.01	0.01
B1-5a	Mutual coupling between the BS and the transmitting antenna	0.00	0.00	Rectangular	1.73	1	0.00	0.00
B1-6	Phase curvature	0.07	0.07	Gaussian	1.00	1	0.07	0.07
C1-2	Uncertainty of the RF signal generator	0.90	0.90	Gaussian	1.00	1	0.90	0.90
B1-7	Impedance mismatch in the transmitting chain	0.42	0.42	U-shaped	1.41	1	0.30	0.30
B1-8	Random uncertainty	0.18	0.25	Rectangular	1.73	1	0.10	0.14
Stage 1: Calibration measurement								
B1-9	Impedance mismatch between the transmitting antenna and the network analyzer	0.43	0.57	U-shaped	1.41	1	0.30	0.40
B1-10	Positioning and pointing misalignment between the reference antenna and the transmitting antenna	0.43	0.43	Rectangular	1.73	1	0.25	0.25
B1-11	Impedance mismatch between the reference antenna and network analyzer	0.43	0.57	U-shaped	1.41	1	0.30	0.40
B1-3	Quality of quiet zone	0.10	0.10	Gaussian	1.00	1	0.10	0.10
B1-4b	Polarization mismatch between the reference antenna and the transmitting antenna	0.02	0.02	Rectangular	1.73	1	0.01	0.01
B1-5b	Mutual coupling between the reference antenna and the transmitting antenna	0.00	0.00	Rectangular	1.73	1	0.00	0.00
B1-6	Phase curvature	0.07	0.07	Gaussian	1.00	1	0.07	0.07
C1-3	Uncertainty of the network analyzer	0.30	0.30	Gaussian	1.00	1	0.30	0.30
B1-12	Influence of the reference antenna feed cable	0.18	0.18	Rectangular	1.73	1	0.10	0.10
B1-13	Reference antenna feed cable loss measurement uncertainty	0.10	0.10	Gaussian	1.00	1	0.10	0.10
B1-14	Influence of the transmitting antenna feed cable	0.18	0.18	Rectangular	1.73	1	0.10	0.10

C1-4	Uncertainty of the absolute gain of the reference antenna	0.52	0.52	Rectangular	1.73	1	0.30	0.30
B1-15	Uncertainty of the absolute gain of the transmitting antenna	0.00	0.00	Rectangular	1.73	1	0.00	0.00
Combined standard uncertainty (1σ) (dB)							**1.19**	**1.25**
Expanded uncertainty (1.96σ - confidence interval of 95 %) (dB)							**2.33**	**2.46**

10.2.3 Compact Antenna Test Range

10.2.3.1 Measurement system description

Measurement system description is captured in clause 7.3.1.

10.2.3.2 Test procedure

10.2.3.2.1 Stage 1: Calibration

Calibration procedure for the Compact Antenna Test Range is captured in clause 8.3.

10.2.3.2.2 Stage 2: BS measurement

The CATR testing procedure consists of the following steps:

1) Set up BS in place of SGH from calibration stage. Align BS with *beam peak direction* of range antenna.
2) Configure signal generator, one port (polarization) and one carrier at a time according to maximum power requirement.
3) Start with signal level at sensitivity level using applicable test model.
4) Calculate EIS per port (polarization) at this point with EIS = PBER - $L_{A \rightarrow B}$.
5) Repeat steps 2 - 4 for all conformance test *beam direction pairs*.

10.2.3.3 MU value derivation, FR1

Table 10.2.3.3-1 captures derivation of the expanded measurement uncertainty values for OTA sensitivity measurements in CATR (Normal test conditions, FR1).

Table 10.2.3.3-1: CATR MU value derivation for OTA sensitivity measurements, Normal test conditions, FR1

UID	Uncertainty source	Uncertainty value (dB)			Distribution of the probability	Divisor based on distribution shape	c_i	Standard uncertainty u_i (dB)		
		f ≤ 3 GHz	3 < f ≤ 4.2 GHz	4.2 < f ≤ 6 GHz				f ≤ 3 GHz	3 < f ≤ 4.2 GHz	4.2 < f ≤ 6 GHz
Stage 2: BS measurement										
B2-1a	Misalignment and pointing error of BS	0.00	0.00	0.00	Exp. normal	2.00	1	0.00	0.00	0.00
B2-2	Standing wave between BS and test range antenna	0.21	0.21	0.21	U-shaped	1.41	1	0.15	0.15	0.15
C1-2	Uncertainty of the RF signal generator	0.46	0.46	0.46	Gaussian	1.00	1	0.46	0.46	0.46
B2-3	RF leakage & dynamic range, test range antenna cable connector terminated.	0.00	0.00	0.00	Gaussian	1.00	1	0.00	0.00	0.00
B2-4a	QZ ripple experienced by BS	0.09	0.09	0.09	Gaussian	1.00	1	0.09	0.09	0.09
B2-9	Miscellaneous uncertainty	0.00	0.00	0.00	Gaussian	1.00	1	0.00	0.00	0.00
Stage 1: Calibration measurement										
C1-3	Uncertainty of the network analyzer	0.13	0.20	0.20	Gaussian	1.00	1	0.13	0.20	0.20
B2-5	Mismatch of transmit chain (i.e. between transmitting measurement antenna and BS)	0.13	0.33	0.33	U-shaped	1.41	1	0.09	0.23	0.23
B2-6	Insertion loss of transmitter chain	0.18	0.18	0.18	Rectangular	1.73	1	0.10	0.10	0.10
B2-7	RF leakage (SGH connector terminated & test range antenna connector cable terminated)	0.00	0.00	0.00	Gaussian	1.00	1	0.00	0.00	0.00
B2-8	Influence of the calibration antenna feed cable	0.02	0.02	0.02	U-shaped	1.41	1	0.02	0.02	0.02
C1-4	Uncertainty of the absolute gain of the reference antenna	0.50	0.43	0.43	Rectangular	1.73	1	0.29	0.25	0.25
B2-9	Miscellaneous uncertainty	0.00	0.00	0.00	Exp. normal	2.00	1	0.00	0.00	0.00
B2-4b	QZ ripple experienced by calibration antenna	0.09	0.09	0.09	Gaussian	1.00	1	0.09	0.09	0.09
B2-10	Rotary joints	0.05	0.05	0.05	U-shaped	1.41	1	0.03	0.03	0.03
B2-1b	Misalignment and pointing error of calibration antenna	0.50	0.50	0.50	Exp. normal	2.00	1	0.25	0.25	0.25
B2-11	Misalignment positioning system	0.00	0.00	0.00	Exp. normal	2.00	1	0.00	0.00	0.00
B2-12	Standing wave between SGH and test range antenna	0.09	0.09	0.09	U-shaped	1.41	1	0.06	0.06	0.06
B2-13	Switching uncertainty	0.26	0.26	0.26	Rectangular	1.73	1	0.15	0.15	0.15
Combined standard uncertainty (1σ) (dB)								**0.68**	**0.71**	**0.71**
Expanded uncertainty (1.96σ – confidence interval of 95 %) (dB)								**1.33**	**1.40**	**1.40**

10.2.3.4 MU value derivation, FR2

Table 10.2.3.4-1 captures derivation of the expanded measurement uncertainty values for OTA sensitivity measurements in CATR (Normal test conditions, FR2).

Table 10.2.3.4-1: CATR MU value derivation for OTA sensitivity measurement, FR2

UID	Uncertainty source	Uncertainty value		Distribution of the probability	Divisor based on distribution shape	c_i	Standard uncertainty u_i (dB)	
		24.25 < f < 29.5 GHz	37 < f < 43.5 GHz				24.25 < f < 29.5 GHz	37 < f < 43.5 GHz
Stage 2: BS measurement								
B2-1a	Misalignment and pointing error of BS	0.2	0.2	Exp. normal	2.00	1	0.10	0.10
B2-2	Standing wave between BS and test range antenna	0.21	0.21	U-shaped	1.41	1	0.15	0.15
C1-2	Uncertainty of the RF signal generator	0.9	0.9	Gaussian	1.00	1	0.90	0.90
B2-3	RF leakage & dynamic range, test range antenna cable connector terminated.	0.01	0.01	Gaussian	1.00	1	0.01	0.01
B2-4a	QZ ripple experienced by BS	0.4	0.4	Gaussian	1.00	1	0.40	0.40
B2-9	Miscellaneous uncertainty	0	0	Gaussian	1.00	1	0.00	0.00
Stage 1: Calibration measurement								
C1-3	Uncertainty of the network analyzer	0.3	0.3	Gaussian	1.00	1	0.30	0.30
B2-5	Mismatch of transmit chain (i.e. between transmitting measurement antenna and BS)	0.43	0.57	U-shaped	1.41	1	0.30	0.40
B2-6	Insertion loss of transmitter chain	0.12	0.12	Rectangular	1.73	1	0.07	0.07
B2-7	RF leakage (SGH connector terminated & test range antenna connector cable terminated)	0.01	0.01	Gaussian	1.00	1	0.01	0.01
B2-8	Influence of the calibration antenna feed cable	0.21	0.29	U-shaped	1.41	1	0.15	0.21
C1-4	Uncertainty of the absolute gain of the reference antenna	0.52	0.52	Rectangular	1.73	1	0.30	0.30
B2-11	Misalignment positioning system	0	0	Exp. normal	2.00	1	0.00	0.00
B2-4b	QZ ripple experienced by calibration antenna	0.1	0.1	Gaussian	1.00	1	0.10	0.10
B2-10	Rotary joints	0	0	U-shaped	1.41	1	0.00	0.00
B2-1b	Misalignment and pointing error of calibration antenna	0	0	Exp. normal	2.00	1	0.00	0.00
B2-12	Standing wave between SGH and test range antenna	0.09	0.09	U-shaped	1.41	1	0.06	0.06
B2-13	Switching uncertainty	0.1	0.1	Rectangular	1.73	1	0.06	0.06
Combined standard uncertainty (1σ) (dB)							**1.15**	**1.19**
Expanded uncertainty (1.96σ – confidence interval of 95 %) (dB)							**2.25**	**2.33**

10.2.4 One Dimensional Compact Range

10.2.4.1 Measurement system description

Measurement system description is captured in clause 7.4.1.

10.2.4.2 Test procedure

10.2.4.2.1 Stage 1: Calibration

Calibration procedure for the One Dimensional Compact Range is captured in clause 8.4.

10.2.4.2.2 Stage 2: BS measurement

The 1D CATR testing procedure consists of the following steps:

1) Connect the feed system of the compact probe to the signal generator.

2) Calibrate the test range, using a reference antenna with standard gain installed in the quiet zone of the probe and measure the path loss between signal generator and reference antenna.

3) Position the BS in the quiet zone of the probe with its manufacturer declared coordinate system reference point in the same place as the phase centre of the reference antenna. The manufacturer declared coordinate system orientation of the BS is set to be aligned with testing system.

4) Connect the BS to the measurement equipment.

5) Align with the conformance test direction.

6) Set the signal generator to the manufacturer declared sensitivity (EIS) level plus the measured path loss.

7) Measure the throughput and BER of the BS.

8) Repeat test steps 2 - 7 for all declared beams and corresponding conformance steering directions.

10.2.4.3 MU value derivation, FR1

Table 10.2.4.3-1 captures derivation of the expanded measurement uncertainty values for OTA sensitivity measurements in One Dimensional Compact Range.

Table 10.2.4.3-1: One Dimensional Compact Range measurement uncertainty value derivation for OTA sensitivity measurements, FR1

UID	Uncertainty source	Uncertainty value (dB)			Distribution of the probability	Divisor based on distribution shape	c_i	Standard uncertainty u_i (dB)		
		f ≤ 3 GHz	3 < f ≤ 4.2 GHz	4.2 < f ≤ 6 GHz				f ≤ 3 GHz	3 < f ≤ 4.2 GHz	4.2 < f ≤ 6 GHz
Stage 2: BS measurement										
B4-1	Misalignment BS and pointing error	0.00	0.00	0.00	Exp. normal	2.00	1	0.00	0.00	0.00
B4-2a	Standing wave between BS and test range antenna	0.18	0.18	0.18	U-shaped	1.41	1	0.13	0.13	0.13
B4-3a	Quiet zone ripple experienced by BS	0.03	0.03	0.03	Gaussian	1.00	1	0.03	0.03	0.03
C1-2	Uncertainty of the RF signal generator	0.46	0.46	0.46	Gaussian	1.00	1	0.46	0.46	0.46
B4-4	Phase curvature	0.01	0.01	0.01	Gaussian	1.00	1	0.01	0.01	0.01
B4-5a	Polarization mismatch between BS and transmitting antenna	0.05	0.05	0.05	Rectangular	1.73	1	0.03	0.03	0.03
B4-6a	Mutual coupling between BS and transmitting antenna	0.00	0.00	0.00	Rectangular	1.73	1	0.00	0.00	0.00
C1-1	Uncertainty of the RF power measurement equipment (e.g. spectrum analyzer, power meter)	0.14	0.26	0.26	Gaussian	1.00	1	0.14	0.26	0.26
B4-7	Impedance mismatch in transmitter chain	0.01	0.01	0.01	U-shaped	1.41	1	0.00	0.01	0.01
B4-8	RF leakage and dynamic range	0.00	0.00	0.00	Gaussian	1.00	1	0.00	0.00	0.00
Stage 1: Calibration measurement										
B4-9	Misalignment positioning system	0.00	0.00	0.00	Exp. Normal	2.00	1	0.00	0.00	0.00
B4-10	Pointing error between reference antenna and test range antenna	0.00	0.00	0.00	Rectangular	1.73	1	0.00	0.00	0.00
B4-11	Impedance mismatch in path to reference antenna	0.05	0.05	0.05	U-shaped	1.41	1	0.04	0.04	0.04
B4-12	Impedance mismatch in path to compact probe	0.03	0.03	0.03	U-shaped	1.41	1	0.02	0.02	0.02
B4-2b	Standing wave between reference antenna and test range antenna	0.15	0.15	0.15	U-shaped	1.41	1	0.11	0.11	0.11
B4-3b	Quiet zone ripple experienced by reference antenna	0.18	0.18	0.18	Gaussian	1.00	1	0.18	0.18	0.18
B4-4	Phase curvature	0.01	0.01	0.01	Gaussian	1.00	1	0.01	0.01	0.01
B4-5b	Polarization mismatch between reference antenna and transmitting antenna	0.05	0.05	0.05	Rectangular	1.73	1	0.03	0.03	0.03
B4-6b	Mutual coupling between reference antenna and transmitting antenna	0.00	0.00	0.00	Rectangular	1.73	1	0.00	0.00	0.00
C1-1	Uncertainty of the RF power measurement equipment (e.g. spectrum analyzer, power meter)	0.14	0.26	0.26	Gaussian	1.00	1	0.14	0.26	0.26
B4-13	Influence of reference antenna feed cable (flexing cables, adapters, attenuators, connector repeatability)	0.08	0.08	0.08	Rectangular	1.73	1	0.05	0.05	0.05
B4-14	Mismatch of transmitter chain	0.20	0.30	0.30	U-shaped	1.41	1	0.14	0.21	0.21
B4-15	Insertion loss of transmitter chain	0.18	0.18	0.18	Rectangular	1.73	1	0.10	0.10	0.10

C1-4	Uncertainty of the absolute gain of the reference antenna	0.50	0.43	0.43	Rectangular	1.73	1	0.29	0.25	0.25
B4-16	RF leakage (SGH connector terminated and test range antenna connector cable terminated)	0.00	0.00	0.00	Gaussian	1.00	1	0.00	0.00	0.00
Combined standard uncertainty (1σ) (dB)								**0.66**	**0.73**	**0.73**
Expanded uncertainty (1.96σ – confidence interval of 95 %) (dB)								**1.29**	**1.43**	**1.43**

10.2.5 Near Field Test range

10.2.5.1 Measurement system description

Measurement system description is captured in clause 7.5.

10.2.5.2 Test procedure

10.2.5.2.1 Stage 1: Calibration

Calibration procedure for the Near Field Test Range is captured in clause 8.5.

10.2.5.2.2 Stage 2: BS measurement

The NFTR testing procedure consists in the following steps:

1) BS near field *radiation pattern* measurement: this is performed when the BS will be receiving a defined modulated signal, as defined in applicable conformance test specification.

NOTE: if the Near Field pattern is derived, for example by transmitting through the *antenna array*, then uncertainty contributors need to be considered in the measurement uncertainty budget (including differences in matching losses between transmit and receive chains).

2) BS near field OTA sensitivity measurement: this is performed by measuring the sensitivity in near field when a modulated signal is received by the BS under test,

3) BS near field to far field EIS transformation: sensitivity measurement is applied.

   The near field to far field transformation is a mathematical computation which is applied to the near field measured *radiation pattern* in order to compute the far field *radiation pattern*. It is typically performed expanding the measured near field over a set of orthogonal basis functions. The near to far field transform is then performed in two steps:

   3.1) Expansion (or projection) of the measured near field (i.e. $E_{meas}I$) over a set of orthogonal basis functions (i.e. $F_{bal}(r)$) in order to evaluate the transformed spectrum:

$$I_{eas}(r) = Spectrum * F_{basis}(r)$$

   3.2) FF (i.e. E_{FF}) computation using the previously calculated spectrum and with the basis functions evaluated at $r \rightarrow \infty$ (i.e. $F_{basis}(r \rightarrow \infty)$):

$$E_{FF} = Spectrum * F_{basis}(r \rightarrow \infty)$$

   When performing the near field to far field transformation, the sensitivity measurement is applied so that the near field pattern will be transformed from relative power (i.e. dB) to absolute power (i.e. dBm). In this specific case, the EIS far field pattern is expressed in terms of the absolute power received by the BS.

4) BS OTA sensitivity: once the full 3D far field EIS pattern has been computed in step 3 from measurements in step 2, the OTA sensitivity can be derived.

10.2.5.3 MU value derivation, FR1

Table 10.2.5.3-1 captures derivation of the expanded measurement uncertainty values for OTA sensitivity measurements in Near Field Test Range.

Standard uncertainty values for the signal generator, network analyzer and reference antenna are according to the test equipment uncertainty values, as captured in annex C.

Table 10.2.5.3-1: NFTR measurement uncertainty value derivation for OTA sensitivity measurements, FR1

UID	Uncertainty source	Uncertainty value (dB)			Distribution of the probability	Divisor based on distribution shape	c_i	Standard uncertainty u_i (dB)		
		f ≤ 3 GHz	3 < f ≤ 4.2 GHz	4.2 < f ≤ 6 GHz				f ≤ 3 GHz	3 < f ≤ 4.2 GHz	4.2 < f ≤ 6 GHz
Stage 2: BS measurement										
B3-1	Axes intersection	0.00	0.00	0.00	Gaussian	1.00	1	0.00	0.00	0.00
B3-2	Axes orthogonality	0.00	0.00	0.00	Gaussian	1.00	1	0.00	0.00	0.00
B3-3	Horizontal pointing	0.00	0.00	0.00	Gaussian	1.00	1	0.00	0.00	0.00
B3-4	Probe vertical position	0.00	0.00	0.00	Gaussian	1.00	1	0.00	0.00	0.00
B3-5	Probe horizontal/vertical pointing	0.00	0.00	0.00	Gaussian	1.00	1	0.00	0.00	0.00
B3-6	Measurement distance	0.00	0.00	0.00	Gaussian	1.00	1	0.00	0.00	0.00
B3-7	Amplitude and phase drift	0.00	0.00	0.00	Gaussian	1.00	1	0.00	0.00	0.00
B3-8	Amplitude and phase noise	0.02	0.02	0.02	Gaussian	1.00	1	0.02	0.02	0.02
B3-9	Leakage and crosstalk	0.00	0.00	0.00	Gaussian	1.00	1	0.00	0.00	0.00
B3-10	Amplitude non-linearity	0.04	0.04	0.04	Gaussian	1.00	1	0.04	0.04	0.04
B3-11	Amplitude and phase shift in rotary joints	0.00	0.00	0.00	Gaussian	1.00	1	0.00	0.00	0.00
B3-12	Channel balance amplitude and phase	0.00	0.00	0.00	Gaussian	1.00	1	0.00	0.00	0.00
B3-13	Probe polarization amplitude and phase	0.00	0.00	0.00	Gaussian	1.00	1	0.00	0.00	0.00
B3-14	Probe pattern knowledge	0.00	0.00	0.00	Gaussian	1.00	1	0.00	0.00	0.00
B3-15	Multiple reflections	0.00	0.00	0.00	Gaussian	1.00	1	0.00	0.00	0.00
B3-16	Room scattering	0.09	0.09	0.09	Gaussian	1.00	1	0.09	0.09	0.09
B3-17	BS support scattering	0.00	0.00	0.00	Gaussian	1.00	1	0.00	0.00	0.00
B3-18	Scan area truncation	0.00	0.00	0.00	Gaussian	1.00	1	0.00	0.00	0.00
B3-19	Sampling point offset	0.01	0.01	0.01	Gaussian	1.00	1	0.01	0.01	0.01
B3-20	Mode truncation	0.02	0.02	0.02	Gaussian	1.00	1	0.02	0.02	0.02
B3-21	Positioning	0.03	0.03	0.03	Rectangular	1.73	1	0.02	0.02	0.02
B3-22	Probe array uniformity	0.06	0.06	0.06	Gaussian	1.00	1	0.06	0.06	0.06
B3-23	Mismatch of transmitter chain	0.28	0.28	0.28	U-Shaped	1.41	1	0.20	0.20	0.20
B3-24	Insertion loss of transmitter chain	0.00	0.00	0.00	Gaussian	1.00	1	0.00	0.00	0.00
B3-25	Uncertainty of the absolute gain of the probe antenna	0.00	0.00	0.00	Gaussian	1.00	1	0.00	0.00	0.00
C1-2	Uncertainty of the RF signal generator	0.46	0.46	0.46	Gaussian	1.00	1	0.46	0.46	0.46
B3-26	Measurement repeatability - positioning repeatability	0.15	0.15	0.15	Gaussian	1.00	1	0.15	0.15	0.15
Stage 1: Calibration measurement										

C1-3	Uncertainty of the network analyzer	0.13	0.20	0.20	Gaussian	1.00	1	0.13	0.20	0.20
B3-27	Mismatch of transmitter chain	0.00	0.00	0.00	Gaussian	1.00	1	0.00	0.00	0.00
B3-28	Insertion loss of transmitter chain	0.00	0.00	0.00	Gaussian	1.00	1	0.00	0.00	0.00
B3-29	Mismatch in the connection of the calibration antenna	0.02	0.02	0.02	U-Shaped	1.41	1	0.01	0.01	0.01
B3-30	Influence of the calibration antenna feed cable	0.00	0.00	0.00	Gaussian	1.00	1	0.00	0.00	0.00
B3-31	Influence of the probe antenna cable	0.00	0.00	0.00	Gaussian	1.00	1	0.00	0.00	0.00
C1-4	Uncertainty of the absolute gain of the reference antenna	0.50	0.43	0.43	Rectangular	1.73	1	0.29	0.25	0.25
B3-32	Short term repeatability	0.09	0.09	0.09	Gaussian	1.00	1	0.09	0.09	0.09
Combined standard uncertainty (1σ) (dB)								**0.63**	**0.63**	**0.63**
Expanded uncertainty (1.96σ – confidence interval of 95 %) (dB)								**1.24**	**1.24**	**1.24**

10.2.6 Plane Wave Synthesizer

10.2.6.1 Measurement system description

Measurement system description is captured in clause 7.6.1.

10.2.6.2 Test procedure

10.2.6.2.1 Stage 1: Calibration

Calibration procedure for the Plane Wave Synthesizer is captured in clause 8.6.

10.2.6.2.2 Stage 2: BS measurement

The PWS testing procedure consists of the following steps:

1) Install BS as BS with the manufacturer declared coordinate system reference point in the same place as the phase center of the reference antenna A as shown in figure 7.6.1-2. The manufacturer declared coordinate system orientation of the BS is set to be aligned with the testing system.

2) Configure signal generator, one port and one carrier at a time according to maximum power requirement.

3) Calculate EIS at this point with EIS = PBER - $L_{C \rightarrow A}$.

4) Repeat steps 2 - 3 for all conformance test *beam direction pairs* and test conditions.

10.2.6.3 MU value derivation, FR1

Table 10.2.6.3-1 captures derivation of the expanded measurement uncertainty values for OTA sensitivity measurements in PWS.

Table 10.2.6.3-1: Plane wave synthesizer MU value derivation for OTA sensitivity measurements, FR1

UID	Uncertainty source	Uncertainty value (dB)			Distribution of the probability	Divisor based on distribution shape	c_i	Standard uncertainty u_i (dB)		
		f ≤ 3 GHz	3 < f ≤ 4.2 GHz	4.2 < f ≤ 6 GHz				f ≤ 3 GHz	3 < f ≤ 4.2 GHz	4.2 < f ≤ 6 GHz
Stage 2: BS measurement										
B5-1a	Misalignment and pointing error of BS	0.10	0.10	0.10	Rectangular	1.73	1	0.06	0.06	0.06
C1-2	Uncertainty of the RF signal generator	0.46	0.46	0.46	Gaussian	1.00	1	0.46	0.46	0.46
B5-2a	Longitudinal position uncertainty (i.e. standing wave and imperfect field synthesis) for BS antenna	0.05	0.14	0.20	Rectangular	1.73	1	0.03	0.08	0.12
B5-3	RF leakage (calibration antenna connector terminated)	0.09	0.09	0.09	Gaussian	1.00	1	0.09	0.09	0.09
B5-4a	QZ ripple experienced by BS	0.42	0.43	0.57	Rectangular	1.73	1	0.24	0.25	0.33
B5-5	Miscellaneous uncertainty	0.00	0.00	0.00	Gaussian	1.00	1	0.00	0.00	0.00
B5-14	System non-linearity	0.10	0.10	0.15	Rectangular	1.73	1	0.06	0.06	0.09
B5-13	Frequency flatness of test system	0.13	0.13	0.13	Rectangular	1.73	1	0.08	0.08	0.08
Stage 1: Calibration measurement										
C1-3	Uncertainty of the network analyzer	0.13	0.20	0.20	Gaussian	1.00	1	0.13	0.20	0.20
B5-6	Mismatch (i.e. reference antenna, network analyser and reference cable)	0.13	0.33	0.33	U-shaped	1.41	1	0.09	0.23	0.23
B5-7	Insertion loss of transmit chain	0.18	0.18	0.18	Rectangular	1.73	1	0.10	0.10	0.10
B5-3	RF leakage (calibration antenna connector terminated)	0.09	0.09	0.09	Gaussian	1.00	1	0.09	0.09	0.09
B5-8	Influence of the calibration antenna feed cable	0.10	0.10	0.10	Rectangular	1.73	1	0.06	0.06	0.06
C1-4	Uncertainty of the absolute gain of the reference antenna	0.50	0.43	0.43	Rectangular	1.73	1	0.29	0.25	0.25
B5-9	Misalignment of positioning system	0.00	0.00	0.00	Exp. normal	2.00	1	0.00	0.00	0.00
B5-1b	Misalignment and pointing error of calibration antenna	0.05	0.05	0.05	Rectangular	1.73	1	0.03	0.03	0.03
B5-10	Rotary joints	0.00	0.00	0.00	U-shaped	1.73	1	0.00	0.00	0.00
B5-2b	Longitudinal position uncertainty (i.e. standing wave and imperfect field synthesis) for calibration antenna	0.12	0.12	0.15	Rectangular	1.73	1	0.07	0.07	0.09
B5-4b	QZ ripple experienced by calibration antenna	0.20	0.20	0.20	Rectangular	1.73	1	0.12	0.12	0.12
B5-11	Switching uncertainty	0.02	0.02	0.02	Rectangular	1.73	1	0.01	0.01	0.01
B5-12	Field repeatability	0.06	0.12	0.15	Gaussian	1.00	1	0.06	0.12	0.15
Combined standard uncertainty (1σ) (dB)								**0.67**	**0.71**	**0.76**
Expanded uncertainty (1.96σ – confidence interval of 95 %) (dB)								**1.31**	**1.40**	**1.48**

10.2.7 Maximum accepted test system uncertainty

Maximum test system uncertainties derivation methodology was described in clause 5.1. The maximum accepted test system uncertainty values was derived based on test system specific values.

According to the methodology referred above, the common maximum accepted test system uncertainty values for OTA sensitivity test can be derived from values captured in tables 10.2.7-1 and 10.2.7-2, derived based on the expanded uncertainty u_e (1.96σ - confidence interval of 95 %) values. The common maximum accepted test system uncertainty values are applicable for all test methods addressing OTA sensitivity test requirement.

Table 10.2.7-1: OTA test system specific measurement uncertainty values for the OTA sensitivity in Normal test conditions, FR1

	Expanded uncertainty (dB)		
	f ≤ 3 GHz	**3 < f ≤ 4.2 GHz**	**4.2 < f ≤ 6 GHz**
Indoor Anechoic Chamber	1.22	1.25	1.25
Compact Antenna Test Range	1.33	1.40	1.40
Near Field Test Range	1.24	1.24	1.24
One Dimensional Compact Range Chamber	1.29	1.43	1.43
Plane Wave Synthesizer	1.31	1.40	1.48
Common maximum accepted test system uncertainty	**1.3**	**1.4**	**1.6**

Table 10.2.7-2: OTA test system specific measurement uncertainty values for the OTA sensitivity in Normal test conditions, FR2

	Expanded uncertainty (dB)		
	24.25 GHz < f ≤ 29.5 GHz	**37 GHz < f ≤ 43.5 GHz**	**43.5 GHz < f ≤ 48.2 GHz**
Indoor Anechoic Chamber	2.33	2.46	
Compact Antenna Test Range	2.25	2.33	
Common maximum accepted test system uncertainty	**2.4**	**2.4**	**3.5**

From FR2 MU inputs in clauses 10.2.2.4 and 10.2.3.4, it has been agreed that MU_{EIS} is 2.4 dB for up to 43.5 GHz.

An overview of the MU values for all the requirements is captured in clause 17.

10.2.8 Test Tolerance for OTA sensitivity

Considering the methodology described in clause 5.1, Test Tolerance values for OTA sensitivity were derived based on values captured in clause 10.2.7.

It has been agreed that the TT for the regulatory receiver directional requirements should be zero, while the TT for other receiver directional requirements should be equal to the MU.

Frequency range specific Test Tolerance values for the OTA sensitivity test are defined in table 10.2.8-1 and 10.2.8-2.

Table 10.2.8-1: Test Tolerance values for the OTA sensitivity, Normal test conditions

	f ≤ 3 GHz	**3 GHz < f ≤ 4.2 GHz**	**4.2 GHz < f ≤ 6 GHz**
Test Tolerance (dB)	**1.3**	**1.4**	**1.6**

Table 10.2.8-2: Test Tolerance values for the OTA sensitivity, Normal test conditions

	24.25 GHz < f ≤ 29.5 GHz	**37 GHz < f ≤ 43.5 GHz**	**43.5 GHz < f ≤ 48.2 GHz**
Test Tolerance (dB)	**2.4**	**2.4**	**3.5**

An overview of the TT values for all the requirements is captured in clause 18.

10.3 OTA reference sensitivity

The OTA REFSENS requirement is intended to ensure the OTA reference sensitivity level for a declared *OTA REFSENS RoAoA*.

The OTA reference sensitivity power level $EIS_{REFSENS}$ is the mean power received at the radiated interface at which a reference performance requirement shall be met for a specified reference measurement channel.

The measurement methods, along with the corresponding calibration, procedure and MU assessment, are the same as those for the OTA sensitivity requirement in clause 10.2, except that the required level is $EIS_{REFSENS}$ in the measurement procedure.

10.4 OTA dynamic range

10.4.1 General

Clause 10.4 captures MU and TT values derivation for the OTA dynamic range directional requirement.

The OTA dynamic range is a measure of the capability of the receiver unit to receive a wanted signal in the presence of an interfering signal inside the received *channel bandwidth* or the capability of receiving high level of wanted signal.

The requirement applies at the RIB when the AoA of the incident wave of a received signal and the interfering signal are from the same direction and are within the *OTA REFSENS RoAoA*.

The wanted and interfering signals apply to all supported polarizations, under the assumption of *polarization match*.

10.4.2 Indoor Anechoic Chamber

10.4.2.1 Measurement system description

Measurement system description is captured in clause 7.2.1.

10.4.2.2 Test procedure

10.4.2.2.1 Stage 1: Calibration

Calibration procedure for the Indoor Anechoic Chamber shall be done with the procedure shown in clause 8.2, with the wanted and AWGN interfering signals with power combiner/coupler:

$L_{Wanted\_cal,\ A\rightarrow D}$: Calibration value for wanted signal between A and D in figure 7.2.1-3.

$L_{AWGN\_cal,\ A\rightarrow E}$: Calibration value for AWGN signal between A and E in figure 7.2.1-3.

10.4.2.2.2 Stage 2: BS measurement

The IAC measurement procedure is the same as those for the OTA sensitivity requirement in clause 10.2.2.2.2, except that step 5 is modified as follow:

5) Set the test signal mean power at the RF signal source generator for wanted signal as the required level plus $L_{Wanted\_cal,\ A\rightarrow D}$ and the reference measurement channel. Set the test signal mean power at the RF signal source generator for AWGN interfering signal as the required level plus $L_{AWGN\_cal,\ A\rightarrow E}$ and at the same frequency as wanted signal.

10.4.2.3 MU value derivation, FR1

The MU for OTA dynamic range requirement is not impacted by OTA chamber related uncertainties, so the MU is the same as for the conducted dynamic range requirement. This is further discussed and concluded in clause 10.4.4.

10.4.3 Compact Antenna Test Range

10.4.3.1 Measurement system description

Measurement system description is captured in clause 7.3.1 and the measurement system setup for OTA dynamic range depicted on figure 7.3.1-3.

10.4.3.2 Test procedure

10.4.3.2.1 Stage 1: Calibration

Calibration procedure for the CATR shall be done with the procedure shown in clause 8.3, for the wanted and AWGN interfering signals with power combiner/coupler:

$L_{Wanted\_cal,\ A\rightarrow B}$: Calibration value for wanted signal between A and B in figure 7.3.1-3.

$L_{AWGN\_cal,\ A\rightarrow E}$: Calibration value for AWGN interfering signal between A and E in figure 7.3.1-3.

10.4.3.2.2 Stage 2: BS measurement

The CATR testing procedure consists of the following steps:

1) Set up BS in place of SGH from calibration stage. Align BS with boresight of transmitting antenna.
2) Configure RF signal generator for wanted signal to set the signal at the required level plus $L_{A\rightarrow B}$ and at reference measurement channel.
3) Configure RF signal generator for AWGN interferer to set the signal at the required level plus $L_{A\rightarrow E}$ and at the same frequency as wanted signal.
4) Measure the throughput of the wanted signal.
5) Repeat steps 2 - 4 for all conformance test bands and directions.

10.4.3.3 MU value derivation, FR1

The MU for OTA dynamic range requirement is not impacted by OTA chamber related uncertainties, so the MU is the same as for the conducted dynamic range requirement. This is further discussed and concluded in clause 10.4.4.

10.4.3A Plane Wave Synthesizer

Measurement system description is captured in clause 7.6.1 and the measurement system setup for OTA dynamic range depicted on figure 7.6.1-3.

10.4.3A.2 Test procedure

10.4.3A.2.1 Stage 1: Calibration

Calibration procedure for the PWS shall be done with the procedure shown in clause 8.6, for the wanted and AWGN interfering signals with power combiner/coupler:

$L_{Wanted\_cal,\ A\rightarrow C}$: Calibration value for wanted signal between A and C in figure 7.6.1-3.

$L_{AWGN\_cal,\ A\rightarrow D}$: Calibration value for AWGN interfering signal between A and D in figure 7.6.1-3.

10.4.3A.2.2 Stage 2: BS measurement

The PWS testing procedure consists of the following steps:

1) Install the BS with the manufacturer declared coordinate system reference point in the same place as the phase center of the reference antenna A as shown in figure 7.6.1-3. The manufacturer declared coordinate system orientation of the BS is set to be aligned with the testing system.

2) Configure RF signal generator for wanted signal to set the signal at the required level plus $L_{A\rightarrow C}$ and at reference measurement channel.

3) Configure RF signal generator for AWGN interferer to set the signal at the required level plus $L_{A\rightarrow D}$ and at the same frequency as wanted signal.

4) Measure the throughput of the wanted signal.

5) Repeat steps 2 - 4 for all conformance test bands and directions.

10.4.3A.3 MU value derivation, FR1

The MU for OTA dynamic range requirement is not impacted by OTA chamber related uncertainties, so the MU is the same as for the conducted dynamic range requirement. This is further discussed and concluded in clause 10.4.4.

10.4.4 Maximum accepted test system uncertainty

The OTA dynamic range requirement provides both a wanted signal and an in-channel AWGN interferer to the BS input. Both the wanted signal and interferer power levels are well above the receiver noise floor, to the extent that the SNR in the receiver is dependent only on the transmitter signal to AWGN level and is independent of the receiver noise level.

Small variations of the receiver power level due to uncertainty factors in the OTA environment will impact both the wanted signal and AWGN equally, and hence do not impact the SNR experienced by the receiver or change the measurement result. Thus, the receiver dynamic range requirement is not impacted by OTA chamber related uncertainties.

In TS 36.141 [3], the MU for the conducted RX dynamic range is taken as the uncertainty in achieving the correct SNR at the test equipment transmitter. Considering the above argumentation that OTA chamber aspects will not impact MU for receiver dynamic range, the same MU of 0.3 dB as for the conducted case can be assumed.

10.4.5 Test Tolerance for OTA dynamic range

Considering the methodology described in clause 5.1, Test Tolerance values for OTA dynamic range were derived based on values in clause 10.4.4.

It has been agreed that the TT for the regulatory receiver directional requirements should be zero, while the TT for other receiver directional requirements should be equal to the MU.

An overview of the TT values for all the requirements is captured in clause 18.

10.5 OTA adjacent channel selectivity, general blocking and narrowband blocking

10.5.1 General

Clause 10.5 captures MU and TT values derivation for the OTA adjacent channel selectivity (ACS), general blocking and narrowband blocking directional requirements.

10.5.2 Indoor Anechoic Chamber

10.5.2.1 Measurement system description

Measurement system description is captured in clause 7.2.1, with the Indoor Anechoic Chamber measurement system setup for ACS, general blocking and narrowband blocking depicted on figure 7.2.1-4.

10.5.2.2 Test procedure

10.5.2.2.1 Stage 1: Calibration

Calibration procedure for the Indoor Anechoic Chamber shall be done with the procedure shown in clause 8.2, for the frequencies of wanted and unwanted signals with power combiner/coupler. Calculate the calibration value for wanted and unwanted signal from A to D as well as from A to E:

$L_{Wanted\_cal,\ A\rightarrow D}$: Calibration value for wanted signal between A and D in figure 7.2.1-4.

$L_{Unanted\_cal,\ A\rightarrow E}$: Calibration value for unwanted signal between A and E in figure 7.2.1-4.

10.5.2.2.2 Stage 2: BS measurement

The IAC testing procedure consists of the following steps:

1) Uninstall the reference antenna and install the BS with its manufacturer declared coordinate system reference point in the same place as the phase centre of the reference antenna. The manufacturer declared coordinate system orientation of the BS is set to be aligned with testing system.

2) Set the BS to be satisfied with the *RoAoA* desired by the requirement covering conformance testing receiving direction.

3) Rotate the BS to make the conformance testing receiving direction aligned with the boresight of the reference antenna at the calibration stage.

4) For FDD BS start transmission at the required condition.

5) Set the test signal mean power at the RF signal source generator for wanted signal as the required level plus $L_{Wanted\_cal,\ A\rightarrow D}$ and the reference measurement channel.

6) Set the test signal mean power at the RF signal source generator for unwanted signal as the required level plus $L_{Unwanted\_cal,\ A\rightarrow E}$ and the interference signal channel.

7) Measure the throughput.

8) Repeat the above steps 1 - 6 per conformance testing direction.

10.5.2.3 MU value derivation, FR1

The MU is estimated based on conducted MU value (e.g. as in TS 36.141 [3]), the MU for EIS in clause 10.2 and an estimated uncertainty for matching of test equipment and BS or test antenna.

$$\mathrm{MU}_{ACS\_OTA} = \sqrt{MU_{wanted}^2 + MU_{interfer}^2 + MU_{chamber\_OTA}^2 + MU_{matching\_OTA}^2} + ACLR_{effect}$$

Where

$$MU_{wanted} = \sqrt{MU_{wanted\_conducted}^2 - MU_{matching\_conducted}^2}$$

$$MU_{interfer} = \sqrt{MU_{interfer\_conducted}^2 - MU_{matching\_conducted}^2}$$

$$MU_{chamber\_OTA} = \sqrt{MU_{EIS\_OTA}^2 - MU_{TestEquipment\_OTA}^2 - MU_{matching\_OTA}^2}$$

The uncertainty budget behind the EIS MU is captured in clause 10.2. The 2 sigma matching uncertainty is 0.196 dB for f ≤ 3 GHz and 0.314 dB for 3 GHz < f ≤ 4.2 GHz.

The ACLR effect from the interference signal is assumed to be 0.4 dB, as in TS 36.141 [3]. This is under the assumption that no additional PA is needed for the test signal in the OTA test setup.

The MU for ACS is calculated as follows. Note that all uncertainties in the table are 1.96σ values.

Table 10.5.2.3-1: IAC MU value derivation for OTA ACS, general blocking and narrowband blocking measurement, FR1

	f ≤ 3 GHz	3 GHz < f ≤ 4.2 GHz	Calculation details
$MU_{wanted\_conducted}$	±0.7 dB	±1 dB	
$MU_{interfer\_conducted}$	±0.7 dB	±1 dB	
$MU_{matching\_conducte}$	±0.196 dB	±0.314 dB	
MU_{wanted}	±0.672dB	±0.949 dB	$MU_{wanted} = \sqrt{MU^2_{wanted\_conducted} - MU^2_{matching\_conducted}}$
$MU_{interfer}$	±0.672 dB	±0.949 dB	$MU_{interfer} = \sqrt{MU^2_{interfer\_conducted} - MU^2_{matching\_conducted}}$
MU_{EIS_OTA}	1.22 dB	1.25 dB	
$MU_{TestEquipment\_O}$	0.9 dB	0.9 dB	
$MU_{matching\_OTA}$	±0.196 dB	±0.314 dB	
$MU_{chamber\_OTA}$	±0.8 dB	±0.804 dB	$MU_{chamber\_OTA} = \sqrt{MU^2_{EIS\_OTA} - MU^2_{TestEquipment} - MU^2_{matching\_OTA}}$
ACLR effect	0.4 dB		
MU_{ACS_OTA}	1.7 dB	2.00 dB	$\mathrm{MU}_{ACS\_OTA} = \sqrt{MU^2_{wanted} + MU^2_{interfer} + MU^2_{chamber\_OTA} + MU^2_{matc}} + ACLR_{effect}$

10.5.3 Compact Antenna Test Range

10.5.3.1 Measurement system description

Measurement system description is captured in clause 7.3.1, with the CATR measurement system setup for ACS, general blocking and narrowband blocking depicted on figure 7.3.1-3.

10.5.3.2 Test procedure

10.5.3.2.1 Stage 1: Calibration

Calibration procedure for the Compact Antenna Test Range shall be done with the procedure shown in clause 8.3, for the frequencies of wanted and interfering signals with power combiner/coupler. Calculate the calibration value for wanted and interfering signal from A to B as well as from A to E:

$L_{Wanted\_cal,\ A\rightarrow B}$: Calibration value for wanted signal between A and B in figure 7.3.1-3.

$L_{interferer\_cal,\ A\rightarrow E}$: Calibration value for interfering signal between A and E in figure 7.3.1-3.

10.5.3.2.2 Stage 2: BS measurement

The CATR testing procedure consists of the following steps:

1) Set up BS in place of SGH from calibration stage. Align BS with boresight of transmitting antenna.
2) Configure RF signal generator for wanted signal to set the signal at the required level plus $L_{A\rightarrow B}$ and at reference measurement channel.
3) Configure RF signal generator for interferer to set the signal at the required level plus $L_{A\rightarrow E}$ and at reference measurement channel. The interferer's centre frequency offset should be swept as required.
4) Measure the throughput of the wanted signal.
5) Repeat steps 2 - 4 for all conformance test directions.
6) Repeat steps above per involved band for multi-band RIB(s).

10.5.3.3 MU value derivation, FR1

The MU is estimated based on conducted MU value (e.g. as in TS 36.141 [3]), the MU for EIS in clause 10.2 and an estimated uncertainty for matching of test equipment and BS or test antenna.

The 2 sigma matching uncertainty is 0.294 dB up to 4.2 GHz.

Test system uncertainty is obtained by following equations:

$$\mathrm{MU}_{ACS\_OTA} = \sqrt{MU_{wanted}^2 + MU_{interfer}^2 + MU_{chamber\_OTA}^2 + MU_{matching\_OTA}^2} + ACLR_{effect}$$

Where

$$MU_{wanted} = \sqrt{MU_{wanted\_conducted}^2 - MU_{matching\_conducted}^2}$$

$$MU_{interfer} = \sqrt{MU_{interfer\_conducted}^2 - MU_{matching\_conducted}^2}$$

$$MU_{chamber\_OTA} = \sqrt{MU_{EIS\_OTA}^2 - MU_{TestEquipment\_OTA}^2 - MU_{matching\_OTA}^2}$$

And we assume $MU_{matching\_conducted} = MU_{matching\_OTA}$

Test system uncertainty for ACS, narrow band blocking, and general band blocking is shown in table 10.5.3.3-1. Note that all uncertainties in table are 1.96σ values.

Table 10.5.3.3-1: CATR MU value derivation for OTA ACS, general blocking and narrowband blocking measurement, FR1

	f ≤ 3 GHz	3 GHz < f ≤ 4.2 GHz	Calculation details
$MU_{wanted\_conducted}$	±0.7 dB	±1 dB	
$MU_{interfer\_conducted}$	±0.7 dB	±1 dB	
$MU_{matching\_conducted}$	±0.294 dB	±0.294 dB	
MU_{wanted}	±0.635dB	±0.956 dB	$MU_{wanted} = \sqrt{MU^2_{wanted\_conducted} - MU^2_{matching\_conducted}}$
$MU_{interfer}$	±0.635 dB	±0.956 dB	$MU_{interfer} = \sqrt{MU^2_{interfer\_conducted} - MU^2_{matching\_conducted}}$
MU_{EIS_OTA}	1.33 dB	1.40 dB	
$MU_{TestEquipiment\_OTA}$	0.9 dB	0.9 dB	
$MU_{matching\_OTA}$	±0.294 dB	±0.294 dB	
$MU_{chamber\_OTA}$	±0.933 dB	±1.03 dB	$MU_{chamber\_OTA} = \sqrt{MU^2_{EIS\_OTA} - MU^2_{TestEquipment\_OTA} - MU^2_{matching\_OTA}}$
ACLR effect	0.4 dB		$\mathrm{MU}_{ACS\_OTA} = \sqrt{MU^2_{wanted} + MU^2_{interfer} + MU^2_{chamber\_OTA} + MU^2_{matching\_OTA}} + ACLR_{effect}$
MU_{ACS_OTA}	1.7 dB	2.1 dB	

10.5.3A Plane Wave Synthesizer

10.5.3A.1 Measurement system description

Measurement system description is captured in clause 7.6.1, with the PWS measurement system setup for ACS, general blocking and narrowband blocking depicted on figure 7.6.1-3.

10.5.3A.2 Test procedure

10.5.3.2A.1 Stage 1: Calibration

Calibration procedure for the PWS shall be done with the procedure shown in clause 8.6, for the frequencies of wanted and interfering signals with power combiner/coupler. Calculate the calibration value for wanted and interfering signal from A to C as well as from A to D:

$L_{Wanted\_cal,\ A\rightarrow C}$: Calibration value for wanted signal between A and C in figure 7.6.1-3.

$L_{interferer\_cal,\ A\rightarrow D}$: Calibration value for interfering signal between A and D in figure 7.6.1-3.

10.5.3A.2.2 Stage 2: BS measurement

The PWS testing procedure consists of the following steps:

1) Install the BS with the manufacturer declared coordinate system reference point in the same place as the phase center of the reference antenna A as shown in figure 7.6.1-3. The manufacturer declared coordinate system orientation of the BS is set to be aligned with the testing system.

2) Configure RF signal generator for wanted signal to set the signal at the required level plus $L_{A\rightarrow C}$ and at reference measurement channel.

3) Configure RF signal generator for interferer to set the signal at the required level plus $L_{A\rightarrow D}$ and at reference measurement channel. The interferer's centre frequency offset should be swept as required.

4) Measure the throughput of the wanted signal.

5) Repeat steps 2 - 4 for all conformance test directions.

6) Repeat steps above per involved band for multi-band RIB(s).

10.5.3A.3 MU value derivation, FR1

The MU is estimated based on conducted MU value (e.g. as in TS 36.141 [3]), the MU for EIS in clause 10.2 and an estimated uncertainty for matching of test equipment and BS or test antenna.

The 2 sigma matching uncertainty is 0.3 dB up to 4.2 GHz.

Test system uncertainty is obtained by following equations:

$$\mathrm{MU}_{ACS\_OTA} = \sqrt{MU_{wanted}^2 + MU_{interfer}^2 + MU_{chamber\_OTA}^2 + MU_{matching\_OTA}^2} + ACLR_{effect}$$

Where

$$MU_{wanted} = \sqrt{MU_{wanted\_conducted}^2 - MU_{matching\_conducted}^2}$$

$$MU_{interfer} = \sqrt{MU_{interfer\_conducted}^2 - MU_{matching\_conducted}^2}$$

$$MU_{chamber\_OTA} = \sqrt{MU_{EIS\_OTA}^2 - MU_{TestEquipment\_OTA}^2 - MU_{matching\_OTA}^2}$$

And we assume $MU_{matching\_conducted} = MU_{matching\_OTA}$

Test system uncertainty for ACS, narrow band blocking, and general band blocking is shown in table 10.5.3A.3-1. Note that all uncertainties in table are 1.96σ values.

Table 10.5.3A.3-1: PWS MU value derivation for OTA ACS, general blocking and narrowband blocking measurement, FR1

	f ≤ 3 GHz	3 GHz < f ≤ 4.2 GHz	Calculation details
$MU_{wanted\_conducted}$	±0.7 dB	±1 dB	
$MU_{interfer\_conducted}$	±0.7 dB	±1 dB	
$MU_{matching\_conducted}$	±0.3 dB	±0.3 dB	
MU_{wanted}	±0.632dB	±0.954 dB	$MU_{wanted} = \sqrt{MU_{wanted\_conducted}^2 - MU_{matching\_conducted}^2}$
$MU_{interfer}$	±0.632 dB	±0.954 dB	$MU_{interfer} = \sqrt{MU_{interfer\_conducted}^2 - MU_{matching\_conducted}^2}$
MU_{EIS_OTA}	1.31 dB	1.40 dB	
$MU_{TestEquipiment\_OTA}$	0.9 dB	0.9 dB	
$MU_{matching\_OTA}$	±0.3 dB	±0.3 dB	
$MU_{chamber\_OTA}$	±0.902 dB	±1.03 dB	$MU_{chamber\_OTA} = \sqrt{MU_{EIS\_OTA}^2 - MU_{TestEquipment\_OTA}^2 - MU_{matching\_OTA}^2}$
ACLR effect	0.4 dB		$\mathrm{MU}_{ACS\_OTA} = \sqrt{MU_{wanted}^2 + MU_{interfer}^2 + MU_{chamber\_OTA}^2 + MU_{matching\_OTA}^2} + ACLR_{effect}$
MU_{ACS_OTA}	1.7 dB	2.1 dB	

10.5.4 Maximum accepted test system uncertainty

MU can be calculated as follows:

$$MU_{ACS,IBB,ICS} = \sqrt{MU_{EIS}^2 + MU_{TestEquipment}^2 + MU_{PA}^2} + ACLR_{effect}$$

With

$$MU_{TestEquipment}\left(1.96\sigma\right)=1.96\times0.9$$

$$MU_{PA}\left(1.96\sigma\right)=1.96\times0.2$$

And

$$ACLR_{effect}\left(1.96\sigma\right)=0.4$$

The MU for 4.2 GHz < f ≤ 6 GHz for each receiver directional requirement can be calculated as shown in tables 10.5.4-1 to 10.5.4-3 below.

Table 10.5.4-1: MU for adjacent channel selectivity, narrowband blocking, in-channel selectivity

Test System Uncertainty	Standard uncertainty u_i (dB)			
	IAC		CATR	
	3 GHz < f ≤ 4.2 GHz	4.2 GHz < f ≤ 6 GHz	3 GHz < f ≤ 4.2 GHz	4.2 GHz < f ≤ 6 GHz
$MU_{conductedwanted}$ (Wanted signal level error)	1	1.30	1	1.30
$MU_{conductedint}$ (Interferer signal level error)	1	1.30	1	1.30
MU_{EIS} (Combined standard uncertainty)	0.64	0.77	0.71	0.83
$MU_{TestEquipment}$ (Uncertainty of the RF signal generator)	0.46	0.58	0.46	0.58
$MU_{matching}$ (Impedance mismatch in the transmitting chain)	0.16	0.28	0.15	0.28
$ACLR_{effect}$ (Impact of interferer leakage)	0.4	0.4	0.4	0.4
Combined standard uncertainty (1σ)	**1.02**	**1.19**	**1.08**	**1.24**
Expanded uncertainty (1.96σ - confidence interval of 95 %)	**2.00**	**2.33**	**2.12**	**2.43**

Table 10.5.4-2: MU for in-band blocking

Test System Uncertainty	Standard uncertainty u_i (dB)			
	IAC		CATR	
	3 GHz < f ≤ 4.2 GHz	4.2 GHz < f ≤ 6 GHz	3 GHz < f ≤ 4.2 GHz	4.2 GHz < f ≤ 6 GHz
$MU_{conductedwanted}$ (Wanted signal level error)	1	1.30	1	1.30
$MU_{conductedint}$ (Interferer signal level error)	1.2	1.46	1.2	1.46
MU_{EIS} (Combined standard uncertainty)	0.64	0.77	0.71	0.83
$MU_{TestEquipment}$ (Uncertainty of the RF signal generator)	0.46	0.58	0.46	0.58
$MU_{matching}$ (Impedance mismatch in the transmitting chain)	0.16	0.28	0.15	0.28
$ACLR_{effect}$ (Impact of interferer leakage)	0.4	0.4	0.4	0.4
Combined standard uncertainty (1σ)	**1.09**	**1.25**	**1.14**	**1.29**
Expanded uncertainty (1.96σ - confidence interval of 95 %)	**2.13**	**2.44**	**2.24**	**2.54**

Substituting the variables above into the formula, the MU for each receiver directional requirement can be calculated as shown in table 10.5.4-3 below.

Table 10.5.4-3: MU for adjacent channel selectivity, in-band blocking, in-channel selectivity

Test System Uncertainty	Standard uncertainty u_i (dB)
MU_{EIS} (Expanded uncertainty)	2.4
$MU_{TestEquipment}$ (Uncertainty of the RF signal generator)	0.9
MU_{PA} (Uncertainty due to use of PA)	0.2
$ACLR_{effect}$ (Impact of interferer leakage)	0.4
Combined standard uncertainty (1σ)	**1.74**
Expanded uncertainty (1.96σ - confidence interval of 95 %)	**3.40**

Maximum test system uncertainties derivation methodology was described in clause 5.1. The maximum accepted test system uncertainty values was derived based on test system specific values.

According to the methodology referred above, the common maximum accepted test system uncertainty values for OTA ACS, general blocking and narrowband blocking test can be derived from values captured in table 10.5.4-1, derived based on the expanded uncertainty u_e (1.96σ - confidence interval of 95 %) values. The common maximum accepted test system uncertainty values are applicable for all test methods addressing OTA ACS, general blocking and narrowband blocking test requirements.

10.5.5 Test Tolerance for OTA ACS, general blocking and narrowband blocking

Considering the methodology described in clause 5.1, Test Tolerance values for OTA ACS, general blocking and narrowband blocking were derived based on values in clause 10.5.4.

It has been agreed that the TT for the regulatory receiver directional requirements should be zero, while the TT for other receiver directional requirements should be equal to the MU.

An overview of the TT values for all the requirements is captured in clause 18.

10.6 OTA receiver intermodulation

10.6.1 General

Clause 10.2 captures MU and TT values derivation for the OTA receiver intermodulation directional requirement.

10.6.2 Indoor Anechoic Chamber

10.6.2.1 Measurement system description

Measurement system description is captured in clause 7.2.1, with the Indoor Anechoic Chamber measurement system setup for OTA RX IMD depicted on figure 7.2.1-5.

10.6.2.2 Test procedure

10.6.2.2.1 Stage 1: Calibration

Calibration procedure for the Indoor Anechoic Chamber shall be done with the procedure shown in clause 8.2, for frequencies of wanted and unwanted signals with power combiner/coupler. Calculate the calibration value for wanted and unwanted signal from A to D, from A to E, and from A to F:

$L_{Wanted\_cal,\ A\rightarrow D}$: Calibration value for wanted signal between A and D in figure 7.2.1-5.

$L_{Unanted\_cal,\ A\rightarrow E}$: Calibration value for unwanted signal between A and E in figure 7.2.1-5.

$L_{Unanted\_cal,\ A\rightarrow F}$: Calibration value for unwanted signal between A and F in figure 7.2.1-5.

10.6.2.2.2 Stage 2: BS measurement

The IAC testing procedure consists of the following steps:

1) Uninstall the reference antenna and install the BS with its manufacturer declared coordinate system reference point in the same place as the phase centre of the reference antenna. The manufacturer declared coordinate system orientation of the BS is set to be aligned with testing system.

2) Set the BS to be satisfied with the *RoAoA* desired by the requirement covering conformance testing receiving direction.

3) Rotate the BS to make the conformance testing receiving direction aligned with the boresight of the reference antenna at the calibration stage.

4) For FDD BS start transmission at the required condition.

5) Set the test signal mean power at the RF signal source generator for wanted signal as the required level plus $L_{Wanted\_cal,\ A\rightarrow D}$ and the reference measurement channel.

6) Set the test signal mean power at the RF signal source generators for unwanted signal as the required level plus $L_{Unwanted\_cal,\ A\rightarrow E}$ or plus $L_{Unwanted\_cal,\ A\rightarrow F}$ and the interference signal channel.

7) Measure the throughput.

8) Repeat the above steps 2 - 6 per conformance testing direction.

10.6.2.3 MU value derivation, FR1

The MU is estimated based on conducted MU value (e.g. as in TS 36.141 [3]), the MU for EIS in clause 10.2 and an estimated uncertainty for matching of test equipment and BS or test antenna.

$$\mathrm{MU}_{\mathrm{RX\ IM\_OTA}} = \sqrt{\mathrm{MU}^2_{\mathrm{wanted}} + (2 \times \mathrm{MU}_{\mathrm{CWinterfer}})^2 + \mathrm{MU}^2_{\mathrm{MODinterfer}} + \mathrm{MU}^2_{\mathrm{chamber_{OTA}}} + \mathrm{MU}^2_{\mathrm{matching\_OTA}}} + \mathrm{ACLR}_{\mathrm{effect}}$$

Where

$$MU_{wanted} = \sqrt{MU^2_{wanted\_conducted} - MU^2_{matching\_conducted}}$$

$$MU_{interfer} = \sqrt{MU^2_{interfer\_conducted} - MU^2_{matching\_conducted}}$$

$$MU_{CWinterfer} = \sqrt{MU^2_{CWinterfer\_conducted} - MU^2_{matching\_conducted}}$$

$$MU_{chamber\_OTA} = \sqrt{MU^2_{EIS\_OTA} - MU^2_{TestEquipment\_OTA} - MU^2_{matching\_OTA}}$$

The uncertainty budget behind the EIS MU is captured in clause 10.2. The 2 sigma matching uncertainty is 0.196 dB for f ≤ 3 GHz and 0.314 dB for 3 GHz < f ≤ 4.2 GHz.

The ACLR effect from the interference signal is assumed to be 0.4 dB, as in TS 36.141 [3]. This is under the assumption that no additional PA is needed for the test signal in the OTA test setup.

The MU for RX IM is calculated as follows. Note that all uncertainties in the table are 1.96σ values.

Table 10.6.2.3-1: IAC MU value derivation for OTA RX IMD measurement, FR1

Frequency range	f ≤ 3 GHz	3 GHz < f ≤ 4.2 GHz	Calculation details
$MU_{wanted\_conducted}$	±0.7 dB	±1.0 dB	
$MU_{CWinterfer\_conducted}$	±0.5 dB	±0.7 dB	
$MU_{MODinterfer\_conducted}$	±0.7 dB	±1.0 dB	
$MU_{matching\_conducted}$	±0.196 dB	±0.314 dB	
MU_{wanted}	±0.672dB	±0.949 dB	$MU_{wanted} = \sqrt{MU^2_{wanted\_conducted} - MU^2_{matching\_conducted}}$
$MU_{CWinterfer}$	±0.460 dB	±0.626 dB	$MU_{CWinterfer} = \sqrt{MU^2_{CWinterfer\_conducted} - MU^2_{matching\_conducted}}$
$MU_{MODinterfer}$	±0.672dB	±0.949 dB	$MU_{interfer} = \sqrt{MU^2_{interfer\_conducted} - MU^2_{matching\_conducted}}$
MU_{EIS_OTA}	1.22 dB	1.25 dB	
$MU_{TestEquipment\_OTA}$	0.9 dB	0.9 dB	
$MU_{matching\_OTA}$	±0.196 dB	±0.314 dB	
$MU_{chamber\_OTA}$	±0.8 dB	±0.807 dB	$MU_{chamber\_OTA} = \sqrt{MU^2_{EIS\_OTA} - MU^2_{TestEquipment} - MU^2_{matching\_OTA}}$
ACLR effect	0.4 dB		
MU_{RXIM_OTA}	2.0 dB	2.5 dB	$MU_{RXIM\_OTA} = \sqrt{MU^2_{wanted} + (2 \times MU_{CWinterfer})^2 + MU^2_{MODinterfer} + MU^2_{chamber_{OTA}} + MU^2_{matching\_OTA}} + ACLR_{effect}$

10.6.3 Compact Antenna Test Range

10.6.3.1 Measurement system description

Measurement system description is captured in clause 7.3.1, with the CATR measurement system setup for OTA RX IMD depicted on figure 7.3.1-4.

10.6.3.2 Test procedure

10.6.3.2.1 Stage 1: Calibration

Calibration procedure for the CATR shall be done with the procedure shown in clause 8.3, for the frequencies of wanted and 2 interfering signals with power combiners/couplers. Calculate the calibration value for wanted and interfering signals from A to B as well as from A to E and A to H:

$L_{Wanted\_cal,\ A\rightarrow B}$: Calibration value for wanted signal between A and B in figure 7.3.1-4.

$L_{interferer1\_cal,\ A\rightarrow E}$: Calibration value for interfering signal between A and E in figure 7.3.1-4.

$L_{interferer2\_cal,\ A\rightarrow H}$: Calibration value for interfering signal between A and H in figure 7.3.1-4.

10.6.3.2.2 Stage 2: BS measurement

The CATR testing procedure consists of the following steps:

1) Set up BS in place of SGH from calibration stage. Align BS with boresight of transmitting antenna.

2) Configure RF signal generator for wanted signal to set the signal at the required level plus $L_{A\rightarrow B}$ and at reference measurement channel.

3) Configure RF signal generator for interferer1 to set a modulated signal at the required level plus $L_{A\rightarrow E}$ and at reference measurement channel. The interferer's centre frequency offset should also fulfil the requirement.

4) Configure RF signal generator for interferer2 to set a CW signal at the required level plus $L_{A\rightarrow H}$ and at reference measurement channel. The interferer's centre frequency offset should also fulfil the requirement.

5) Measure the BER or throughput of the wanted signal.

6) Repeat steps all above per involved band for multi-band RIB(s).

10.6.3.3 MU value derivation, FR1

The MU is estimated based on conducted MU value (e.g. as in TS 36.141 [3]), the MU for EIS in clause 10.2 and an estimated uncertainty for matching of test equipment and BS or test antenna.

Test system uncertainty is obtained by follwing equations:

$$\mathrm{MU}_{\mathrm{RX\ IM\_OTA}} = \sqrt{\mathrm{MU}_{\mathrm{wanted}}^2 + (2 \times \mathrm{MU}_{\mathrm{CWinterfer}})^2 + \mathrm{MU}_{\mathrm{MODinterfer}}^2 + \mathrm{MU}_{\mathrm{chamber_{OTA}}}^2 + \mathrm{MU}_{\mathrm{matching\_OTA}}^2} + \mathrm{ACLR}_{\mathrm{effect}}$$

Where

$$MU_{wanted} = \sqrt{MU_{wanted\_conducted}^2 - MU_{matching\_conducted}^2}$$

$$MU_{MODinterfer} = \sqrt{MU_{MODinterfer\_conducted}^2 - MU_{matching\_conducted}^2}$$

$$MU_{CWinterfer} = \sqrt{MU_{CWinterfer\_conducted}^2 - MU_{matching\_conducted}^2}$$

$$MU_{chamber\_OTA} = \sqrt{MU_{EIS\_OTA}^2 - MU_{TestEquipment\_OTA}^2 - MU_{matching\_OTA}^2}$$

And we assume $MU_{matching\_conducted} = MU_{matching\_OTA}$

Test system uncertainty for OTA receiver intermodulation is shown in table 10.6.3.3-1. Note that all uncertainties in table are 1.96σ values.

Table 10.6.3.3-1: CATR MU value derivation for OTA receiver intermodulation measurement, FR1

Frequency range	f ≤ 3 GHz	3 GHz < f ≤ 4.2 GHz	Calculation details
$MU_{wanted\_conducted}$	±0.7 dB	±1.0 dB	
$MU_{CWinterfer\_conducted}$	±0.5 dB	±0.7 dB	
$MU_{MODinterfer\_conducted}$	±0.7 dB	±1.0 dB	
$MU_{matching\_conducted}$	±0.294 dB	±0.294 dB	
MU_{wanted}	±0.635 dB	±0.956 dB	$MU_{wanted} = \sqrt{MU^2_{wanted\_conducted} - MU^2_{matching\_conducted}}$
$MU_{CWinterfer}$	±0.404 dB	±0.635 dB	$MU_{CWinterfer} = \sqrt{MU^2_{CWinterfer\_conducted} - MU^2_{matching\_conducted}}$
$MU_{MODinterfer}$	±0.635 dB	±0.956 dB	$MU_{MODinterfer} = \sqrt{MU^2_{MODinterfer\_conducted} - MU^2_{matching\_conducted}}$
MU_{EIS_OTA}	1.33 dB	1.40 dB	
$MU_{TestEquipiment\_OTA}$	0.9 dB	0.9 dB	
$MU_{matching\_OTA}$	±0.294 dB	±0.294 dB	
$MU_{chamber\_OTA}$	±0.933 dB	±1.03 dB	$MU_{chamber\_OTA} = \sqrt{MU^2_{EIS\_OTA} - MU^2_{TestEquipment\_OTA} - MU^2_{matching\_OTA}}$
ACLR effect	0.4 dB		
MU_{RXIM_OTA}	2.0 dB	2.6 dB	$MU_{RX\,IM\_OTA} = \sqrt{MU^2_{wanted} + (2 \times MU_{CWinterfer})^2 + MU^2_{MODinterfer} + MU^2_{chamber_{OTA}} + MU^2_{matching\_OTA}} + ACLR_{effect}$

10.6.3A Plan Wave Synthesizer

10.6.3A.1 Measurement system description

Measurement system description is captured in clause 7.6.1, with the CATR measurement system setup for OTA RX IMD depicted on figure 7.6.1-4.

10.6.3A.2 Test procedure

10.6.3A.2.1 Stage 1: Calibration

Calibration procedure for the PWS shall be done with the procedure shown in clause 8.6, for the frequencies of wanted and 2 interfering signals with power combiners/couplers. Calculate the calibration value for wanted and interfering signals from A to C as well as from A to D and A to E:

$L_{Wanted\_cal,\ A\rightarrow C}$: Calibration value for wanted signal between A and C in figure 7.6.1-4.

$L_{interferer1\_cal,\ A\rightarrow D}$: Calibration value for interfering signal between A and D in figure 7.6.1-4.

$L_{interferer2\_cal,\ A\rightarrow E}$: Calibration value for interfering signal between A and E in figure 7.6.1-4.

10.6.3A.2.2 Stage 2: BS measurement

The PWS testing procedure consists of the following steps:

1) Install the BS with the manufacturer declared coordinate system reference point in the same place as the phase center of the reference antenna A as shown in figure 7.6.1-4. The manufacturer declared coordinate system orientation of the BS is set to be aligned with the testing system.

2) Configure RF signal generator for wanted signal to set the signal at the required level plus $L_{A\rightarrow C}$ and at reference measurement channel.

3) Configure RF signal generator for interferer1 to set a modulated signal at the required level plus $L_{A\rightarrow D}$ and at reference measurement channel. The interferer's centre frequency offset should also fulfil the requirement.

4) Configure RF signal generator for interferer2 to set a CW signal at the required level plus $L_{A\rightarrow E}$ and at reference measurement channel. The interferer's centre frequency offset should also fulfil the requirement.

5) Measure the BER or throughput of the wanted signal.

6) Repeat steps all above per involved band for multi-band RIB(s).

10.6.3A.3 MU value derivation, FR1

The MU is estimated based on conducted MU value (e.g. as in TS 36.141 [3]), the MU for EIS in clause 10.2 and an estimated uncertainty for matching of test equipment and BS or test antenna.

Test system uncertainty is obtained by following equations:

$$\mathrm{MU}_{\mathrm{RX\ IM\_OTA}} = \sqrt{\mathrm{MU}_{\mathrm{wanted}}^2 + (2 \times \mathrm{MU}_{\mathrm{CWinterfer}})^2 + \mathrm{MU}_{\mathrm{MODinterfer}}^2 + \mathrm{MU}_{\mathrm{chamber_{OTA}}}^2 + \mathrm{MU}_{\mathrm{matching\_OTA}}^2} + \mathrm{ACLR}_{\mathrm{effect}}$$

Where:

$$MU_{wanted} = \sqrt{MU_{wanted\_conducted}^2 - MU_{matching\_conducted}^2}$$

$$MU_{MODinterfer} = \sqrt{MU_{MODinterfer\_conducted}^2 - MU_{matching\_conducted}^2}$$

$$MU_{CWinterfer} = \sqrt{MU_{CWinterfer\_conducted}^2 - MU_{matching\_conducted}^2}$$

$$MU_{chamber\_OTA} = \sqrt{MU_{EIS\_OTA}^2 - MU_{TestEquipment\_OTA}^2 - MU_{matching\_OTA}^2}$$

And we assume $MU_{matching\_conducted} = MU_{matching\_OTA}$

Test system uncertainty for OTA receiver intermodulation is shown in table 10.6.3A.3-1. Note that all uncertainties in table are 1.96σ values.

Table 10.6.3A.3-1: PWS MU value derivation for OTA receiver intermodulation measurement, FR1

Frequency range	f ≤ 3 GHz	3 GHz < f ≤ 4.2 GHz	Calculation details
$MU_{wanted\_conducted}$	±0.7 dB	±1.0 dB	
$MU_{CWinterfer\_conducted}$	±0.5 dB	±0.7 dB	
$MU_{MODinterfer\_conducted}$	±0.7 dB	±1.0 dB	
$MU_{matching\_conducted}$	±0.3 dB	±0.3 dB	
MU_{wanted}	±0.632 dB	±0.954 dB	$MU_{wanted} = \sqrt{MU^2_{wanted\_conducted} - MU^2_{matching\_conducted}}$
$MU_{CWinterfer}$	±0.400 dB	±0.632 dB	$MU_{CWinterfer} = \sqrt{MU^2_{CWinterfer\_conducted} - MU^2_{matching\_conducted}}$
$MU_{MODinterfer}$	±0.632 dB	±0.954 dB	$MU_{MODinterfer} = \sqrt{MU^2_{MODinterfer\_conducted} - MU^2_{matching\_conducted}}$
MU_{EIS_OTA}	1.31 dB	1.40 dB	
$MU_{TestEquipiment\_OTA}$	0.9 dB	0.9 dB	
$MU_{matching\_OTA}$	±0.3 dB	±0.3 dB	
$MU_{chamber\_OTA}$	±0.902 dB	±1.03 dB	$MU_{chamber\_OTA} = \sqrt{MU^2_{EIS\_OTA} - MU^2_{TestEquipment\_OTA} - MU^2_{matching\_OTA}}$
ACLR effect	0.4 dB		
MU_{RXIM_OTA}	1.9 dB	2.5 dB	$MU_{RX\,IM\_OTA} = \sqrt{MU^2_{wanted} + (2 \times MU_{CWinterfer})^2 + MU^2_{MODinterfer} + MU^2_{chamber_{OTA}} + MU^2_{matching\_OTA}} + ACLR_{effect}$

10.6.4 Maximum accepted test system uncertainty

MU can be calculated as follows:

$$MU_{RXIMD} = \sqrt{MU^2_{EIS} + MU^2_{TestEquipment} + MU^2_{CW\,\mathrm{int}} + MU^2_{PA}} + ACLR_{effect}$$

With

$$MU_{TestEquipment}(1.96\sigma) = 1.96 \times 0.9$$

$$MU_{PA}(1.96\sigma) = 1.96 \times 0.2$$

And

$$ACLR_{effect}(1.96\sigma) = 0.4$$

Table 10.6.4-1: MU for receiver intermodulation

Test System Uncertainty	Standard uncertainty u_i (dB)			
	IAC		CATR	
	3 GHz < f ≤ 4.2 GHz	4.2 GHz < f ≤ 6 GHz	3 GHz < f ≤ 4.2 GHz	4.2 GHz < f ≤ 6 GHz
$MU_{conductedwanted}$ (Wanted signal level error)	1	1.30	1	1.30
$MU_{conductedmodint}$ (Modulated interferer signal level error)	1	1.30	1	1.30
$MU_{conductedCWint}$ (CW interferer signal level error)	0.7	1.08	0.7	1.09
MU_{EIS} (Combined standard uncertainty)	0.64	0.77	0.71	0.83
$MU_{TestEquipment}$ (Uncertainty of the RF signal generator)	0.46	0.58	0.46	0.58
$MU_{matching}$ (Impedance mismatch in the transmitting chain)	0.16	0.28	0.15	0.28
$ACLR_{effect}$ (Impact of interferer leakage)	0.4	0.4	0.4	0.4
Combined standard uncertainty (1σ)	**1.24**	**1.57**	**1.32**	**1.62**
Expanded uncertainty (1.96σ - confidence interval of 95 %)	**2.43**	**3.09**	**2.60**	**3.17**

Substituting the variables above into the formula, the MU for each receiver directional requirement can be calculated as shown in table below.

Maximum test system uncertainties derivation methodology was described in clause 5.1. The maximum accepted test system uncertainty values was derived based on test system specific values.

According to the methodology referred above, the common maximum accepted test system uncertainty values for OTA RX IMD test can be derived from values captured in table 10.6.4-1, derived based on the expanded uncertainty u_e (1.96σ - confidence interval of 95 %) values. The common maximum accepted test system uncertainty values are applicable for all test methods addressing OTA RX IMD test requirements.

Table 10.6.4-2: MU for receiver intermodulation

Test System Uncertainty	Standard uncertainty u_i (dB)
MU_{EIS} (Expanded uncertainty)	2.4
$MU_{TestEquipment}$ (Uncertainty of the RF signal generator)	0.9
MU_{CWint} (CW interferer signal level error)	0.9
MU_{PA} (Uncertainty due to use of PA)	0.2
$ACLR_{effect}$ (Impact of interferer leakage)	0.4
Combined standard uncertainty (1σ)	**1.99**
Expanded uncertainty (1.96σ - confidence interval of 95 %)	**3.90**

10.6.5 Test Tolerance for OTA RX IMD

Considering the methodology described in clause 5.1, Test Tolerance values for OTA RX IMD were derived based on values discussed in clause 10.6.4.

It has been agreed that the TT for the regulatory receiver directional requirements should be zero, while the TT for other receiver directional requirements should be equal to the MU.

An overview of the TT values for all the requirements is captured in clause 18.

10.7 OTA in-channel selectivity

10.7.1 General

Clause 10.7 captures MU and TT values derivation for the OTA in-channel selectivity (ICS) directional requirements.

10.7.2 Indoor Anechoic Chamber

10.7.2.1 Measurement system description

Measurement system description is captured in clause 7.2.1, with the Indoor Anechoic Chamber measurement system setup for OTA ICS depicted on figure 7.2.1-5.

10.7.2.2 Test procedure

10.7.2.2.1 Stage 1: Calibration

The procedure for calibration for OTA ICS is the same as for OTA ACS, as described in clause 10.5.2.2.1 and the system setup depicted on figure 7.2.1-4, however calibration must be carried out for wanted signal and interferer signals appropriate to OTA ICS.

10.7.2.2.2 Stage 2: BS measurement

The IAC procedure for OTA ICS is based on the OTA ACS procedure, described in clause 10.5.2.2.1.

10.7.2.3 MU value derivation, FR1

The MU budget and values for OTA ICS are the same as those for OTA ACS, described in clause 10.5.2.3.

10.7.3 Compact Antenna Test Range

10.7.3.1 Measurement system description

Measurement system description is captured in clause 7.3.1, with the CATR measurement system setup for OTA ICS depicted on figure 7.3.1-5.

10.7.3.2 Test procedure

10.7.3.2.1 Stage 1: Calibration

Calibration procedure for the CATR shall be done with the procedure shown in clause 8.3, with power combiner/coupler. Calculate the calibration value for wanted and interfering signal from A to B as well as from A to D:

$L_{Wanted\_cal,\ A\rightarrow B}$: Calibration value for wanted signal between A and B in figure 7.3.1-5.

$L_{interferer\_cal,\ A\rightarrow D}$: Calibration value for interfering signal between A and D in figure 7.3.1-5.

10.7.3.2.2 Stage 2: BS measurement

The CATR testing procedure consists of the following steps:

1) Set up BS in place of SGH from calibration stage. Align BS with boresight of transmitting antenna.
2) Configure RF signal generator for wanted signal to set it at the required level plus $L_{A\rightarrow B}$ and at one side of the frequency centre of reference measurement channel.
3) Configure RF signal generator for interferer to set it at the required level plus $L_{A\rightarrow E}$ and at the other side of the frequency centre of reference measurement channel. The interferer should be adjacent to the wanted signal.
4) Measure the throughput of the wanted signal.
5) Repeat the steps 2 - 4 by exchange the locations of wanted signal and interfering signal in frequency domain at the same channel.
6) Repeat steps above per involved band for multi-band RIB(s).

10.7.3.3 MU value derivation, FR1

The MU budget and values for OTA ICS are the same as those for OTA ACS, described in clause 10.5.3.3.

10.7.3A Plane Wave Synthesizer

10.7.3A.1 Measurement system description

Measurement system description is captured in clause 7.6.1, with the PWS measurement system setup for OTA ICS depicted on figure 7.6.1-3.

10.7.3A.2 Test procedure

10.7.3A.2.1 Stage 1: Calibration

Calibration procedure for the PWS shall be done with the procedure shown in clause 8.6, with power combiner/coupler. Calculate the calibration value for wanted and interfering signal from A to C as well as from A to D:

$L_{Wanted\_cal,\ A\rightarrow C}$: Calibration value for wanted signal between A and C in figure 7.6.1-3.

$L_{interferer\_cal,\ A\rightarrow D}$: Calibration value for interfering signal between A and D in figure 7.6.1-3.

10.7.3A.2.2 Stage 2: BS measurement

The PWS testing procedure consists of the following steps:

1) Install the BS with the manufacturer declared coordinate system reference point in the same place as the phase center of the reference antenna A as shown in figure 7.6.1-3. The manufacturer declared coordinate system orientation of the BS is set to be aligned with the testing system.

2) Configure RF signal generator for wanted signal to set it at the required level plus $L_{A\rightarrow C}$ and at one side of the frequency centre of reference measurement channel.

3) Configure RF signal generator for interferer to set it at the required level plus $L_{A\rightarrow D}$ and at the other side of the frequency centre of reference measurement channel. The interferer should be adjacent to the wanted signal.

4) Measure the throughput of the wanted signal.

5) Repeat the steps 2 - 4 by exchange the locations of wanted signal and interfering signal in frequency domain at the same channel.

6) Repeat steps above per involved band for multi-band RIB(s).

10.7.3A.3 MU value derivation, FR1

The MU budget and values for OTA ICS are the same as those for OTA ACS, described in clause 10.5.3A.3.

10.7.4 Maximum accepted test system uncertainty

The MU value for OTA ICS is the same as that for OTA ACS, described in clause 10.5.4.

10.7.5 Test Tolerance for OTA ICS

Considering the methodology described in clause 5.1, Test Tolerance values for OTA ICS were derived based on values in clause 10.5.4.

It has been agreed that the TT for the regulatory receiver directional requirements should be zero, while the TT for other receiver directional requirements should be equal to the MU.

An overview of the TT values for all the requirements is captured in clause 18.

11 In-band TRP requirements

11.1 General

Clause 11 captures MU and TT values derivation for the in-band *TRP requirements*.

11.2 OTA BS output power

11.2.1 General

Clause 11.2 captures MU and TT values derivation for the OTA BS output power *TRP requirement* in Normal test conditions.

11.2.2 Indoor Anechoic Chamber

11.2.2.1 Measurement system description

Measurement system description is captured in clause 7.2.1, with the Indoor Anechoic Chamber measurement system setup depicted on figure 7.2.1-1.

NOTE: Whilst the TRP estimation does not require far-field conditions explicitly the MU budget below is based on errors under far-field conditions. If far-field conditions are not met an IAC may still be used but a separate MU analysis is necessary.

11.2.2.2 Test procedure

11.2.2.2.1 Stage 1: Calibration

Calibration procedure for the Indoor Anechoic Chamber is captured in clause 8.2 with the calibration system setup for TX requirements depicted in figure 8.2-1.

11.2.2.2.2 Stage 2: BS measurement

The IAC testing procedure consists of the following steps:

1) Uninstall the reference antenna and install the BS with the manufacturer declared coordinate system reference point in the same place as the phase centre of the reference antenna. The manufacturer declared coordinate system orientation of the BS is set to be aligned with the testing system.

2) Rotate the BS to make the testing direction aligned with the direction of the receiving antenna.

3) Set the BS to transmit the test signal at the maximum power according to the applicable test model.

4) Measure the applicable test parameter.

5) Repeat the above steps 3 - 4 at a number of discrete directions around the sphere according to the chosen measurement grid, see clause 6.3.3.

6) Calculate TRPs from EIRP, as shown in clause 6.3.

The appropriate test parameter in step 4 is the measured mean power $P_{R\_desired,\ D}$ within the desired signal channel bandwidth for each carrier arriving at the measurement equipment connector at reference point D (figure 7.2.1-1). Calculation of $EIRP_d$ is done using the following equitation:

$$EIRP_d = P_{R\_desired,\ D} + L_{TX\_cal,\ A \rightarrow D}$$

NOTE: If the test facility only supports single polarization, then measure EIRP with the test facility's test antenna/probe *polarization matched* to the BS, then measure and sum the EIRP on both polarizations. If the test facility supports dual polarization then measure total EIRP for two orthogonal polarizations and calculate total radiated transmit power as the sum over both polarizations.

11.2.2.3 MU value derivation, FR1

Table 11.2.2.3-1 captures derivation of the expanded measurement uncertainty values for OTA BS output power measurements in Indoor Anechoic Chamber (Normal test conditions, FR1).

Table 11.2.2.3-1: IAC MU value derivation for EIRP measurement of OTA BS output power, FR1

UID	Uncertainty source	Uncertainty value (dB)			Distribution of the probability	Divisor based on distribution shape	c_i	Standard uncertainty u_i (dB)		
		f < 3 GHz	3 < f < 4.2 GHz	4.2 < f < 6 GHz				f < 3 GHz	3 < f < 4.2 GHz	4.2 < f < 6 GHz
Stage 2: BS measurement										
A1-1	Positioning misalignment between the BS and the reference antenna	0.03	0.03	0.03	Rectangular	1.73	1	0.02	0.02	0.02
A1-2	Pointing misalignment between the BS and the receiving antenna	0.3	0.3	0.3	Rectangular	1.73	1	0.17	0.17	0.17
A1-3	Quality of quiet zone	0.1	0.1	0.1	Gaussian	1.00	1	0.10	0.10	0.10
A1-4a	Polarization mismatch between the BS and the receiving antenna	0.01	0.01	0.01	Rectangular	1.73	1	0.01	0.01	0.01
A1-5a	Mutual coupling between the BS and the receiving antenna	0	0	0	Rectangular	1.73	1	0.00	0.00	0.00
A1-6	Phase curvature	0.05	0.05	0.05	Gaussian	1.00	1	0.05	0.05	0.05
C1-1	Uncertainty of the RF power measurement equipment	0.14	0.26	0.26	Gaussian	1.00	1	0.14	0.26	0.26
A1-7	Impedance mismatch in the receiving chain	0.14	0.33	0.33	U-shaped	1.41	1	0.10	0.23	0.23
A1-8	Random uncertainty	0.1	0.1	0.1	Rectangular	1.73	1	0.06	0.06	0.06
Stage 1: Calibration measurement										
A1-9	Impedance mismatch between the receiving antenna and the network analyzer	0.05	0.05	0.05	U-shaped	1.41	1	0.04	0.04	0.04
A1-10	Positioning and pointing misalignment between the reference antenna and the receiving antenna	0.01	0.01	0.01	Rectangular	1.73	1	0.01	0.01	0.01
A1-11	Impedance mismatch between the reference antenna and the network analyzer.	0.05	0.05	0.05	U-shaped	1.41	1	0.04	0.04	0.04
A1-3	Quality of quiet zone	0.10	0.10	0.10	Gaussian	1.00	1	0.10	0.10	0.10
A1-4b	Polarization mismatch for reference antenna	0.01	0.01	0.01	Rectangular	1.73	1	0.01	0.01	0.01
A1-5b	Mutual coupling between the reference antenna and the receiving antenna	0.00	0.00	0.00	Rectangular	1.73	1	0.00	0.00	0.00
A1-6	Phase curvature	0.05	0.05	0.05	Gaussian	1.00	1	0.05	0.05	0.05
C1-3	Uncertainty of the network analyzer	0.13	0.20	0.20	Gaussian	1.00	1	0.13	0.20	0.20
A1-12	Influence of the reference antenna feed cable	0.05	0.05	0.05	Rectangular	1.73	1	0.03	0.03	0.03
A1-13	Reference antenna feed cable loss measurement uncertainty	0.06	0.06	0.06	Gaussian	1.00	1	0.06	0.06	0.06
A1-14	Influence of the receiving antenna feed cable	0.05	0.05	0.05	Rectangular	1.73	1	0.03	0.03	0.03
C1-4	Uncertainty of the absolute gain of the reference antenna	0.50	0.43	0.43	Rectangular	1.73	1	0.29	0.25	0.25
A1-15	Uncertainty of the absolute gain of the receiving antenna	0.00	0.00	0.00	Rectangular	1.73	1	0.00	0.00	0.00
Combined standard uncertainty (1σ) (dB)								**0.44**	**0.54**	**0.54**
Expanded uncertainty (1.96σ - confidence interval of 95 %) (dB)								**0.87**	**1.06**	**1.06**
TRP summation error								**0.75**	**0.75**	**0.75**
Total MU								**1.15**	**1.30**	**1.30**

11.2.3 Compact Antenna Test Range

11.2.3.1 Measurement system description

Measurement system description is captured in clause 7.3.1, with the Compact Antenna Test Range measurement system setup depicted on figure 8.3-1.

11.2.3.2 Test procedure

11.2.3.2.1 Stage 1: Calibration

Calibration procedure for the Compact Antenna Test Range is captured in clause 8.3.

NOTE: This stage may be omitted provided calibration stage has been performed already during output power measurement.

11.2.3.2.2 Stage 2: BS measurement

The CATR testing procedure consists of the following steps:

1) Set up BS in place of SGH from calibration stage. Align the coordinates system of the BS with that of the test system.

2) Set the BS to transmit the test signal at the maximum power according to the applicable test model.

3) Rotate the BS to make the testing direction aligned with the direction of the receiving antenna.

4) Measure the applicable test parameter.

5) Repeat the above steps 2 - 4 at a number of discrete directions around the sphere according to the chosen measurement grid, see clause 6.3.3.

6) Calculate TRPs from power density, as shown in clause 6.3.3.

The appropriate test parameter in step 5 is measured mean power $P_{R\_desired,\ B}$ within the desired signal channel bandwidth for each carrier arriving at the measurement equipment connector B in figure 8.3-1. Calculation of $power_d$ is done using the following equitation:

$$power_d = P_{R\_desired,\ B} + L_{TX\_cal,\ A \rightarrow B}$$

NOTE: If the test facility only supports single polarization, then measure power with the test facility's test antenna/probe *polarization matched* to the BS, then measure and sum the power on both polarizations. If the test facility supports dual polarization then measure total power for two orthogonal polarizations and calculate total radiated transmit power as the sum over both polarizations.

11.2.3.3 MU value derivation, FR1

Table 11.2.3.3-1 captures derivation of the expanded measurement uncertainty values for OTA BS output power measurements in CATR (Normal test conditions, FR1).

Table 11.2.3.3-1: CATR MU value derivation for OTA BS output power measurement, FR1

UID	Uncertainty source	Uncertainty value (dB)			Distribution of the probability	Divisor based on distribution shape	c_i	Standard uncertainty u_i (dB)		
		f ≤ 3 GHz	3 < f ≤ 4.2 GHz	4.2 < f ≤ 6 GHz				f ≤ 3 GHz	3 < f ≤ 4.2 GHz	4.2 < f ≤ 6 GHz
Stage 2: BS measurement										
A2-18	Misalignment and pointing error of BS (for TRP)	0.30	0.30	0.30	Rectangular	1.73	1	0.173	0.173	0.173
C1-1	Uncertainty of the RF power measurement equipment (e.g. spectrum analyzer, power meter)	0.14	0.26	0.26	Gaussian	1.00	1	0.140	0.260	0.260
A2-2a	Standing wave between BS and test range antenna	0.21	0.21	0.21	U-shaped	1.41	1	0.148	0.148	0.148
A2-3	RF leakage (SGH connector terminated & test range antenna connector cable terminated)	0.00	0.00	0.00	Gaussian	1.00	1	0.001	0.001	0.001
A2-4a	QZ ripple experienced by BS	0.09	0.09	0.09	Gaussian	1.00	1	0.093	0.093	0.093
A2-12	Frequency flatness of test system	0.25	0.25	0.25	Gaussian	1.00	1	0.250	0.250	0.250
Stage 1: Calibration measurement										
C1-3	Uncertainty of the network analyzer	0.13	0.20	0.20	Gaussian	1.00	1	0.13	0.20	0.20
A2-5a	Mismatch or receiver chain between receiving antenna and measurement receiver	0.13	0.33	0.33	U-shaped	1.41	1	0.09	0.23	0.23
A2-6	Insertion loss of receiver chain	0.18	0.18	0.18	Rectangular	1.73	1	0.10	0.10	0.10
A2-3	RF leakage (SGH connector terminated & test range antenna connector cable terminated)	0.00	0.00	0.00	Gaussian	1.00	1	0.00	0.00	0.00
A2-7	Influence of the calibration antenna feed cable	0.02	0.02	0.02	U-shaped	1.41	1	0.02	0.02	0.02
C1-4	Uncertainty of the absolute gain of the reference antenna	0.50	0.43	0.43	Rectangular	1.73	1	0.29	0.25	0.25
A2-8	Misalignment positioning system	0.00	0.00	0.00	Exp. normal	2.00	1	0.00	0.00	0.00
A2-18b	Misalignment and pointing error of calibration antenna (for TRP)	0.50	0.50	0.50	Exp. normal	2.00	1	0.25	0.25	0.25
A2-9	Rotary joints	0.05	0.05	0.05	U-shaped	1.41	1	0.03	0.03	0.03
A2-2b	Standing wave between calibration antenna and test range antenna	0.09	0.09	0.09	U-shaped	1.41	1	0.06	0.06	0.06
A2-4b	QZ ripple experienced by calibration antenna	0.01	0.01	0.01	Gaussian	1.00	1	0.01	0.01	0.01
A2-11	Switching uncertainty	0.26	0.26	0.26	Rectangular	1.73	1	0.15	0.15	0.15
Combined standard uncertainty (1σ) (dB)								**0.59**	**0.67**	**0.67**
Expanded uncertainty (1.96σ - confidence interval of 95 %) (dB)								**1.16**	**1.31**	**1.31**
TRP summation error								**0.75**	**0.75**	**0.75**
Total MU								**1.39**	**1.51**	**1.51**

11.2.3.4 MU value derivation, FR2

A CATR MU budget was assessed in order to determine acceptable MU for the EIRP accuracy measurement in FR2. The CATR test setup and calibration and measurement procedures for FR2 are expected to be similar to those of FR1, although the test chamber dimensions and associated MU values will scale due to the shorter wavelengths and larger relative array apertures.

Table 11.2.3.4-1 captures derivation of the expanded measurement uncertainty values for OTA BS output power measurements in CATR (Normal test conditions, FR2).

Table 11.2.3.4-1: CATR MU value derivation for OTA BS output power measurement, FR2

UID	Uncertainty source	Uncertainty value (dB)		Distribution of the probability	Divisor based on distribution shape	c_i	Standard uncertainty u_i (dB)	
		24.25 < f ≤ 29.5 GHz	37 < f ≤ 43.5 GHz				24.25 < f ≤ 29.5 GHz	37 < f ≤ 43.5 GHz
Stage 2: BS measurement								
A2-1a	Misalignment and pointing error of BS (for EIRP)	0.20	0.20	Exp. normal	2.00	1	0.10	0.10
C1-1	Uncertainty of the RF power measurement equipment (e.g. spectrum analyzer, power meter) - high power	0.50	0.70	Gaussian	1.00	1	0.50	0.70
A2-2a	Standing wave between BS and test range antenna	0.03	0.03	U-shaped	1.41	1	0.02	0.02
A2-3	RF leakage (SGH connector terminated & test range antenna connector cable terminated)	0.01	0.01	Gaussian	1.00	1	0.01	0.01
A2-4a	QZ ripple experienced by BS	0.40	0.40	Gaussian	1.00	1	0.40	0.40
A2-12	Frequency flatness of test system	0.25	0.25	Gaussian	1.00	1	0.25	0.25
Stage 1: Calibration measurement								
C1-3	Uncertainty of the network analyzer	0.30	0.30	Gaussian	1.00	1	0.30	0.30
A2-5a	Mismatch of receiver chain between receiving antenna and measurement receiver	0.43	0.57	U-shaped	1.41	1	0.30	0.40
A2-6	Insertion loss of receiver chain	0.00	0.00	Rectangular	1.73	1	0.00	0.00
A2-3	RF leakage (SGH connector terminated & test range antenna connector cable terminated)	0.01	0.01	Gaussian	1.00	1	0.01	0.01
A2-7	Influence of the calibration antenna feed cable	0.21	0.29	U-shaped	1.41	1	0.15	0.21
C1-4	Uncertainty of the absolute gain of the reference antenna	0.52	0.52	Rectangular	1.73	1	0.30	0.30
A2-8	Misalignment positioning system	0.00	0.00	Exp. normal	2.00	1	0.00	0.00
A2-1b	Misalignment and pointing error of calibration antenna (for EIRP)	0.00	0.00	Exp. normal	2.00	1	0.00	0.00
A2-9	Rotary joints	0.00	0.00	U-shaped	1.41	1	0.00	0.00
A2-2b	Standing wave between calibration antenna and test range antenna	0.09	0.09	U-shaped	1.41	1	0.06	0.06
A2-4b	QZ ripple experienced by calibration antenna	0.01	0.01	Gaussian	1.00	1	0.01	0.01
Combined standard uncertainty (1σ) (dB)							**0.88**	**1.05**
Expanded uncertainty (1.96σ - confidence interval of 95 %) (dB)							**1.73**	**2.07**
TRP summation error							**1.20**	**1.20**
Total MU							**2.11**	**2.39**

11.2.4 Near Field Test Range

11.2.4.1 Measurement system description

Measurement system description is captured in clause 7.5.1.

In case of OTA BS output power measurements, NF to FF transform is not needed since TRP is computed based on power density measured in Near Field by sampling properly the declared beam.

11.2.4.2 Test procedure

11.2.4.2.1 Stage 1: Calibration

Calibration procedure for the Near Field Test Range is captured in clause 8.5.

11.2.4.2.2 Stage 2: BS measurement

The NFTR testing procedure consists of the following steps:

1) Configure the beam of the BS according to the required conditions for the TRP test.
2) Set the BS to transmit the test signal at the maximum power according to the applicable test model.
3) Measure the power density at a number of points (Theta; Phi) in the beam according to the chosen measurement grid. Refer to clause 6.3 for details about measurement grids for TRP measurements.
4) Calculate TRP from the measured power density as in clause 6.3.

11.2.4.3 MU value derivation, FR1

Table 11.2.4.3-1 captures derivation of the expanded measurement uncertainty values for OTA BS output power measurements in NFTR (Normal test conditions, FR1).

Table 11.2.4.3-1: NFTR MU value derivation for power density pattern measurement, FR1

UID	Uncertainty source	Uncertainty value (dB)			Distribution of the probability	Divisor based on distribution shape	c_i	Standard uncertainty u_i (dB)		
		f ⩽ 3 GHz	3 < f ≤ 4.2 GHz	4.2 < f ≤ 6 GHz				f ≤ 3 GHz	3 < f ≤ 4.2 GHz	4.2 < f ≤ 6 GHz
Stage 2: BS measurement										
A3-1	Axes intersection	0.00	0.00	0.00	Gaussian	1	1	0.00	0.00	0.00
A3-2	Axes orthogonality	0.00	0.00	0.00	Gaussian	1	1	0.00	0.00	0.00
A3-3	Horizontal pointing	0.00	0.00	0.00	Gaussian	1	1	0.00	0.00	0.00
A3-4	Probe vertical position	0.00	0.00	0.00	Gaussian	1	1	0.00	0.00	0.00
A3-5	Probe horizontal/vertical pointing	0.00	0.00	0.00	Gaussian	1	1	0.00	0.00	0.00
A3-6	Measurement distance	0.00	0.00	0.00	Gaussian	1	1	0.00	0.00	0.00
A3-7	Amplitude and phase drift	0.00	0.00	0.00	Gaussian	1	1	0.00	0.00	0.00
A3-8	Amplitude and phase noise	0.02	0.02	0.02	Gaussian	1	1	0.02	0.02	0.02
A3-9	Leakage and crosstalk	0.00	0.00	0.00	Gaussian	1	1	0.00	0.00	0.00
A3-10	Amplitude non-linearity	0.04	0.04	0.04	Gaussian	1	1	0.04	0.04	0.04
A3-11	Amplitude and phase shift in rotary joints	0.00	0.00	0.00	Gaussian	1	1	0.00	0.00	0.00
A3-12	Channel balance amplitude and phase	0.00	0.00	0.00	Gaussian	1	1	0.00	0.00	0.00
A3-13	Probe polarization amplitude and phase	0.00	0.00	0.00	Gaussian	1	1	0.00	0.00	0.00
A3-14	Probe pattern knowledge	0.00	0.00	0.00	Gaussian	1	1	0.00	0.00	0.00
A3-15	Multiple reflections	0.00	0.00	0.00	Gaussian	1	1	0.00	0.00	0.00
A3-16	Room scattering	0.09	0.09	0.09	Gaussian	1	1	0.09	0.09	0.09
A3-17	BS support scattering	0.00	0.00	0.00	Gaussian	1	1	0.00	0.00	0.00
A3-21	Positioning	0.03	0.03	0.03	Rectangular	1.73	1	0.02	0.02	0.02
A3-22	Probe array uniformity	0.06	0.06	0.06	Gaussian	1	1	0.06	0.06	0.06
A3-23	Mismatch of receiver chain	0.28	0.28	0.28	U-Shaped	1.41	1	0.20	0.20	0.20
A3-24	Insertion loss of receiver chain	0.00	0.00	0.00	Gaussian	1	1	0.00	0.00	0.00
A3-25	Uncertainty of the absolute gain of the probe antenna	0.00	0.00	0.00	Gaussian	1	1	0.00	0.00	0.00
C1-1	Uncertainty of the RF power measurement equipment (e.g. spectrum analyzer, power meter)	0.14	0.26	0.26	Gaussian	1	1	0.14	0.26	0.26
A3-26	Measurement repeatability - positioning repeatability	0.15	0.15	0.15	Gaussian	1	1	0.15	0.15	0.15
A3-33	Frequency flatness of test system	0.25	0.25	0.25	Gaussian	1	1	0.25	0.25	0.25
Stage 1: Calibration measurement										
C1-3	Uncertainty of the network analyzer	0.13	0.20	0.20	Gaussian	1	1	0.13	0.20	0.20
A3-27	Mismatch of receiver chain	0.00	0.00	0.00	Gaussian	1	1	0.00	0.00	0.00
A3-28	Insertion loss of receiver chain	0.00	0.00	0.00	Gaussian	1	1	0.00	0.00	0.00
A3-29	Mismatch in the connection of the calibration antenna	0.02	0.02	0.02	U-Shaped	1.41	1	0.01	0.01	0.01
A3-30	Influence of the calibration antenna feed cable	0.00	0.00	0.00	Gaussian	1	1	0.00	0.00	0.00

A3-31	Influence of the probe antenna cable	0.00	0.00	0.00	Gaussian	1	1	0.00	0.00	0.00
C1-4	Uncertainty of the absolute gain of the reference antenna	0.50	0.43	0.43	Rectangular	1.7321	1	0.29	0.25	0.25
A3-32	Short term repeatability	0.09	0.09	0.09	Gaussian	1	1	0.09	0.09	0.09
Combined standard uncertainty (1σ) (dB)								**0.52**	**0.56**	**0.56**
Expanded uncertainty (1.96σ - confidence interval of 95 %) (dB)								**1.01**	**1.10**	**1.10**
TRP summation error								**0.75**	**0.75**	**0.75**
Total MU								**1.26**	**1.33**	**1.33**

11.2.5 Reverberation Chamber

11.2.5.1 Measurement system description

Measurement system description is captured in clause 7.7.1.

11.2.5.2 Test procedure

11.2.5.2.1 Stage 1: Calibration

Calibration procedure for the Reverberation chamber is captured in clause 8.7.

11.2.5.2.2 Stage 2: BS measurement

TRP calculation in an RC does not rely on a coordinate system and as such no reference coordinate system is defined for the RC method, and no alignment between BS and test system is required. The BS should be placed/mounted in the working volume of the RC. It is advised (but not mandatory) to orient the BS is such a way that its antenna boresight is pointing towards a well-stirred part of the chamber (such as towards the stirrer).

The RC testing procedure consists of the following steps:

1. Calculate Ambient Power Level:

1) Connect the RX antenna to a calibrated receiver test equipment using the same cables as in the calibration step. Turn on the BS control. Keep the BS RF power off. Terminate the REF TX ant in a 50 Ω load. See figure 8.7-1 (b).

2) Measure the voltage data U_{amb} and calculate the ambient power level as $P_{amb} = \frac{\langle |U_{amb}|^2 \rangle}{50}$

3) Calculate the ambient TRP level as $TRP_{amb} = \frac{\eta M_1^{(r)}}{P^{(r)}} P_{amb}$

2. Calculate BS TRP:

1) Turn on the BS RF power and measure the received voltage U_{BS}, see figure 8.7-1 (c).

2) Calculate the BS power as: $P_{BS} = \frac{\langle |U_{BS}|^2 \rangle}{50}$

3) Calculate the TRP from the BS as: $TRP_{BS} = \frac{\eta M_1^{(r)}}{P^{(r)}} P_{BS}$

4) The following tests shall be performed on the measurement data:

- The dynamic range TRP_{BS} / TRP_{amb} must be at least 20 dB.

- The number of uncorrelated samples, calculated via the auto-correlation function, see [35], shall be at least 250.

There is no need for additional directional measurements to the stirring cycle. In a well-stirred chamber, all directional components will be contained in the samples collected during the measurement cycle and accounted for correctly in the final TRP calculation.

NOTE: A reverberation chamber does not represent a real-life deployment for the BS and can be considered as a hostile environment due to the potentially high field strengths. Therefore, it is important to make sure that the BS is operating properly throughout the entire measurement.

11.2.5.3 MU value derivation, FR1

Table 11.2.5.3-1 captures derivation of the expanded measurement uncertainty values for OTA BS output power measurements in Reverberation Chamber (Normal test conditions, FR1).

Table 11.2.5.3-1: Reverberation chamber MU value derivation for OTA BS output power, FR1

UID	Uncertainty source	Uncertainty value (dB)			Distribution of the probability	Divisor based on distribution shape	c_i	Standard uncertainty u_i (dB)		
		f ≤ 3 GHz	3 < f ≤ 4.2 GHz	4.2 < f ≤ 6 GHz				f ≤ 3 GHz	3 < f ≤ 4.2 GHz	4.2 < f ≤ 6 GHz
Stage 2: BS measurement										
C1-1	Uncertainty of the RF power measurement equipment (e.g. spectrum analyzer, power meter)	0.14	0.26	0.26	Gaussian	1.00	1	0.14	0.26	0.26
A6-1	Impedance mismatch in the receiving chain	0.20	0.20	0.20	U-shaped	1.41	1	0.14	0.14	0.14
A6-2	Random uncertainty	0.10	0.10	0.10	Rectangular	1.73	1	0.06	0.06	0.06
Stage 1: Calibration measurement										
A6-3	Reference antenna radiation efficiency	0.20	0.20	0.20	Gaussian	1.00	1	0.20	0.20	0.20
A6-4	Mean value estimation of reference antenna mismatch efficiency	0.15	0.15	0.15	Gaussian	1.00	1	0.15	0.15	0.15
C1-3	Uncertainty of the network analyzer	0.13	0.20	0.20	Gaussian	1.00	1	0.13	0.20	0.20
A6-5	Influence of the reference antenna feed cable	0.20	0.20	0.20	Gaussian	1.00	1	0.20	0.20	0.20
A6-6	Mean value estimation of transfer function	0.27	0.27	0.27	Gaussian	1.00	1	0.27	0.27	0.27
A6-7	Uniformity of transfer function	0.50	0.50	0.50	Gaussian	1.00	1	0.50	0.50	0.50
Combined standard uncertainty (1σ) (dB)								**0.70**	**0.75**	**0.75**
Expanded uncertainty (1.96σ - confidence interval of 95 %) (dB)								**1.37**	**1.46**	**1.46**

11.2.5.4 MU value derivation, FR2

Table 11.2.5.4-1 captures derivation of the expanded measurement uncertainty values for OTA BS output power measurements in Reverberation Chamber (Normal test conditions, FR2).

Table 11.2.5.4-1: Reverberation chamber MU value derivation for OTA BS output power, FR2

UID	Uncertainty source	Uncertainty value (dB)		Distribution of the probability	Divisor based on distribution shape	c_i	Standard uncertainty u_i (dB)	
		24.25 < f ≤ 29.5 GHz	37 < f ≤ 43.5 GHz				24.25 < f ≤ 29.5 GHz	37 < f ≤ 43.5 GHz
Stage 2: BS measurement								
C1-1	Uncertainty of the RF power measurement equipment (e.g. spectrum analyzer, power meter) - high power (EIRP, TRP)	0.50	0.70	Gaussian	1.00	1	0.50	0.70
A6-1	Impedance mismatch in the receiving chain	0.20	0.20	U-shaped	1.41	1	0.14	0.14
A6-2	Random uncertainty	0.10	0.10	Rectangular	1.73	1	0.06	0.06
Stage 1: Calibration measurement								
A6-3	Reference antenna radiation efficiency	0.30	0.30	Gaussian	1.00	1	0.30	0.30
A6-4	Mean value estimation of reference antenna mismatch efficiency	0.27	0.27	Gaussian	1.00	1	0.27	0.27
C1-3	Uncertainty of the network analyzer	0.30	0.30	Gaussian	1.00	1	0.30	0.30
A6-5	Influence of the reference antenna feed cable	0.20	0.20	Gaussian	1.00	1	0.20	0.20
A6-6	Mean value estimation of transfer function	0.27	0.27	Gaussian	1.00	1	0.27	0.27
A6-7	Uniformity of transfer function	0.50	0.50	Gaussian	1.00	1	0.50	0.50
Combined standard uncertainty (1σ) (dB)							**0.94**	**1.06**
Expanded uncertainty (1.96σ - confidence interval of 95 %) (dB)							**1.85**	**2.08**

11.2.6 Plane Wave Synthesizer

11.2.6.1 Measurement system description

Measurement system description is captured in clause 7.6.1.

11.2.6.2 Test procedure

11.2.6.2.1 Stage 1: Calibration

Calibration procedure for the Plane Wave Synthesizer is captured in clause 8.6.

11.2.6.2.2 Stage 2: BS measurement

The PWS testing procedure consists of the following steps:

1) Install the BS as BS with the manufacturer declared coordinate system reference point in the same place as the phase center of the reference antenna A as shown in figure 7.6.1-1. The manufacturer declared coordinate system orientation of the BS is set to be aligned with the testing system.

2) Set the BS to generate the tested beam with the applicable test model with the *beam peak direction* intended to be the same as the testing direction.

3) Measure the appropriate test parameter at the measurement equipment (such as a spectrum analyzer or power meter) denoted in figure 7.6.1-1.

4) Repeat the above steps 2 - 3 at a number of discrete directions around the sphere according to the chosen measurement grid, see clause 6.3.3.

5) Calculate TRPs from power density, as shown in clause 6.3.3.

The appropriate test parameter in step 4 is mean power $P_{R\_desired,\ C}$, within the desired signal channel bandwidth for each carrier arriving at the measurement equipment connector C in figure 7.6.1-1. Calculation of $power_c$ is done using the following equitation:

$$power_c = P_{R\_desired,\ C} + L$$

NOTE: If the test facility only supports single polarization, then measure power with the test facility's test antenna/probe *polarization matched* to the BS, then measure and sum the power on both polarizations. If the test facility supports dual polarization then measure total power for two orthogonal polarizations and calculate total radiated transmit power as the sum over both polarizations.

11.2.6.3 MU value derivation, FR1

Table 11.2.6.3-1 captures derivation of the expanded measurement uncertainty values for OTA BS output power measurements in PWS.

Table 11.2.6.3-1: PWS MU value derivation for OTA BS output power

UID	Uncertainty source	Uncertainty value (dB)			Distribution of the probability	Divisor based on distribution shape	c_i	Standard uncertainty u_i (dB)		
		f ≤ 3 GHz	3 < f ≤ 4.2 GHz	4.2 < f ≤ 6 GHz				f ≤ 3 GHz	3 < f ≤ 4.2 GHz	4.2 < f ≤ 6 GHz
Stage 2: BS measurement										
A7-1a	Misalignment and pointing error of BS	0.10	0.10	0.10	Rectangular	1.73	1	0.06	0.06	0.06
C1-1	Uncertainty of the RF power measurement equipment (e.g. spectrum analyzer, power meter)	0.14	0.26	0.26	Gaussian	1.00	1	0.14	0.26	0.26
A7-2a	Longitudinal position uncertainty (i.e. standing wave and imperfect field synthesis) for BS antenna	0.05	0.14	0.20	Rectangular	1.73	1	0.03	0.08	0.12
A7-3	RF leakage (calibration antenna connector terminated)	0.09	0.09	0.09	Gaussian	1.00	1	0.09	0.09	0.09
A7-4a	QZ ripple experienced by BS	0.42	0.43	0.57	Rectangular	1.73	1	0.24	0.25	0.33
A7-5	Miscellaneous uncertainty	0.00	0.00	0.00	Gaussian	1.00	1	0.00	0.00	0.00
A7-14	System non-linearity	0.10	0.10	0.15	Rectangular	1.73	1	0.06	0.06	0.09
A7-13	Frequency flatness of test system	0.13	0.13	0.13	Rectangular	1.73	1	0.08	0.08	0.08
Stage 1: Calibration measurement										
C1-3	Uncertainty of the network analyzer	0.13	0.20	0.20	Gaussian	1.00	1	0.13	0.20	0.20
A7-6	Mismatch (i.e. reference antenna, network analyser and reference cable)	0.13	0.33	0.33	U-shaped	1.41	1	0.09	0.23	0.23
A7-7	Insertion loss of receiver chain	0.18	0.18	0.18	Rectangular	1.73	1	0.10	0.10	0.10
A7-3	RF leakage (calibration antenna connector terminated)	0.09	0.09	0.09	Gaussian	1.00	1	0.09	0.09	0.09
A7-8	Influence of the calibration antenna feed cable	0.10	0.10	0.10	Rectangular	1.73	1	0.06	0.06	0.06
C1-4	Uncertainty of the absolute gain of the reference antenna	0.50	0.43	0.43	Rectangular	1.73	1	0.29	0.25	0.25
A7-9	Misalignment of positioning system	0.00	0.00	0.00	Exp. normal	2.00	1	0.00	0.00	0.00
A7-1b	Misalignment and pointing error of calibration antenna	0.05	0.05	0.05	Rectangular	1.73	1	0.03	0.03	0.03
A7-10	Rotary joints	0.00	0.00	0.00	U-shaped	1.73	1	0.00	0.00	0.00
A7-2b	Longitudinal position uncertainty (i.e. standing wave and imperfect field synthesis) for calibration antenna	0.12	0.12	0.15	Rectangular	1.73	1	0.07	0.07	0.09
A7-4b	QZ ripple experienced by calibration antenna	0.20	0.20	0.20	Rectangular	1.73	1	0.12	0.12	0.12
A7-11	Switching uncertainty	0.02	0.02	0.02	Rectangular	1.73	1	0.01	0.01	0.01
A7-12	Field repeatability	0.06	0.12	0.15	Gaussian	1.00	1	0.06	0.12	0.15
Combined standard uncertainty (1σ) (dB)								**0.50**	**0.60**	**0.66**
Expanded uncertainty (1.96σ - confidence interval of 95 %) (dB)								**0.98**	**1.18**	**1.29**
TRP summation error								**0.75**	**0.75**	**0.75**
Total MU								**1.24**	**1.40**	**1.49**

11.2.7 Maximum accepted test system uncertainty

For the frequency range up to 4.2 GHz, the same MU values as for E-UTRA in TS 37.145-2 [4] were adopted. It is expected that the test chamber setup, calibration and measurement procedures for E-UTRA and NR will be highly similar. All uncertainty factors were judged to be the same.

For the frequency range 4.2 - 6 GHz, all MU factors, including instrumentation related MU were judged to be the same as for the 3 - 4.2 GHz range, and thus the total MU for 4.2 – 6 GHz is the same as for 3 - 4.2 GHz. This assessment was made under the assumption of testing BS designed for licensed spectrum; for unlicensed spectrum the MU may differ.

For CATR the expanded MU is established as a root sum square combining of the dB values for the MU and the SE (see clause 12.10), the MU was decided to be 2.1 dB for the frequency range 24.25 < f < 29.5 GHz and 2.4 dB for the frequency range 37 < f < 43.5 GHz.

Maximum test system uncertainties derivation methodology was described in clause 5.1. The maximum accepted test system uncertainty values was derived based on test system specific values.

According to the methodology referred above, the common maximum accepted test system uncertainty values for OTA BS output power test can be derived from values captured in table 11.2.7-1 for FR1 and in table 11.2.7-2 for FR2, derived based on the expanded uncertainty u_e (1.96σ - confidence interval of 95 %) values. The common maximum accepted test system uncertainty values are applicable for all test methods addressing OTA BS output power test requirement.

Table 11.2.7-1: Test system specific MU values for the OTA BS output power test, Normal test conditions, FR1

	Expanded uncertainty u_e (dB)		
	f ≤ 3 GHz	**3 GHz < f ≤ 4.2 GHz**	**4.2 GHz < f ≤ 6 GHz**
Indoor Anechoic Chamber	1.15	1.30	1.30
Compact Antenna Test Range	1.39	1.51	1.51
Near Field Test Range	1.26	1.33	1.33
Plane Wave Synthesizer	1.24	1.40	1.49
Reverberation Chamber	1.37	1.46	1.46
Common maximum accepted test system uncertainty	**1.4**	**1.5**	**1.5**

Table 11.2.7-2: Test system specific MU values for the OTA BS output power test, Normal test conditions, FR2

	Expanded uncertainty u_e (dB)		
	24.25 < f < 29.5 GHz	**37 < f < 43.5 GHz**	**43.5 < f < 48.2 GHz**
Indoor Anechoic Chamber			-
Compact Antenna Test Range	2.11	2.39	-
Near Field Test Range			-
Reverberation chamber	1.85	2.08	-
Plane Wave Synthesizer			-
Common maximum accepted test system uncertainty	**2.1**	**2.4**	**2.6**
NOTE: MU estimation for 43.5 < f < 48.2 GHz was derived based on the linear approximation (based on MU values for lower frequency ranges). MU extrapolation approach was used instead of the typical derivation of the Expanded MU based on the MU budget calculations, as in case of lower frequency ranges.			

An overview of the MU values for all the requirements is captured in clause 17.

11.2.8 Test Tolerance for OTA BS output power

Considering the methodology described in clause 5.1, Test Tolerance values for OTA BS output power were derived based on values captured in clause 11.2.7.

The TT value was agreed to be the same as the MU value, both for FR1 and FR2.

Frequency range specific Test Tolerance values for the OTA BS output power test are defined in table 11.2.8-1 for FR1 and in table 11.2.8-2 for FR2.

Table 11.2.8-1: Test Tolerance values for the OTA BS output power, Normal test conditions, FR1

	f ≤ 3 GHz	3 GHz < f ≤ 4.2 GHz	4.2 GHz < f ≤ 6 GHz
Test Tolerance (dB)	1.4	1.5	1.5

Table 11.2.8-2: Test Tolerance values for the OTA BS output power, Normal test conditions, FR2

	24.25 < f < 29.5 GHz	37 < f < 43.5 GHz	43.5 < f < 48.2 GHz
Test Tolerance (dB)	2.1	2.4	2.6

An overview of the TT values for all the requirements is captured in clause 18.

11.3 OTA ACLR

11.3.1 General

Clause 11.3 captures MU and TT values derivation for the OTA ACLR *TRP requirement* in Normal test conditions.

11.3.2 Indoor Anechoic Chamber

11.3.2.1 Measurement system description

Measurement system description is captured in clause 7.2.1, with the Indoor Anechoic Chamber measurement system setup depicted on figure 7.2.1-1.

NOTE: Whilst the TRP estimation does not require far-field conditions explicitly the MU budget below is based on errors under far-field conditions. If far-field conditions are not met an in-door anechoic chamber may be used but a separate MU analysis is necessary.

11.3.2.2 Test procedure

11.3.2.2.1 Stage 1: Calibration

Calibration procedure for the Indoor Anechoic Chamber is captured in clause 8.2 with the calibration system setup for TX requirements depicted in figure 8.2-1.

Calibration shall be performed individually for both the wanted signal and adjacent channel frequencies.

11.3.2.2.2 Stage 2: BS measurement

Reference IAC procedure in clause 11.2.2.2.2 (i.e. the same procedure as for OTA BS output power measurement in IAC). The appropriate parameters in step 4 are:

$P_{R\_desired,\ D}$: Measured mean power within the desired signal channel bandwidth for each carrier at the measurement equipment connector at D in figure 7.2.1-1.

$P_{R\_emission,\ D}$: Measured mean emission power in the neighbouring channel bandwidth for each carrier at the measurement equipment connector at D in figure 7.2.1-1.

Calculation of $power_d$ and $power_e$ is done using following formulas:

$$power_d = P_{R\_desired,\ D} + L_{TX\_cal,\ A\rightarrow D}$$

$$power_e = P_{R\_emission,\ D} + L_{TX\_cal,\ A\rightarrow D}$$

After calculation of TRP from power as shown in clause 6.3 calculate the OTA ACLR.

11.3.2.3 MU value derivation, FR1

Table 11.3.2.3-1 captures derivation of the expanded measurement uncertainty values for absolute OTA ACLR measurements in in Indoor Anechoic Chamber (Normal test conditions, FR1).

Table 11.3.2.3-1: IAC MU value derivation for the absolute OTA ACLR measurement

UID	Uncertainty source	Uncertainty value (dB)			Distribution of the probability	Divisor based on distribution shape	c_i	Standard uncertainty u_i (dB)		
		f ≤ 3 GHz	3 < f ≤ 4.2 GHz	4.2 < f ≤ 6 GHz				f ≤ 3 GHz	3 < f ≤ 4.2 GHz	4.2 < f ≤ 6 GHz
Stage 2: BS measurement										
A1-1	Positioning misalignment between the BS and the reference antenna	0.03	0.03	0.03	Rectangular	1.73	1	0.02	0.02	0.02
A1-2	Pointing misalignment between the BS and the receiving antenna	0.30	0.30	0.30	Rectangular	1.73	1	0.17	0.17	0.17
A1-3	Quality of quiet zone	0.10	0.10	0.10	Gaussian	1.00	1	0.10	0.10	0.10
A1-4a	Polarization mismatch between the BS and the receiving antenna	0.01	0.01	0.01	Rectangular	1.73	1	0.01	0.01	0.01
A1-5a	Mutual coupling between the BS and the receiving antenna	0.00	0.00	0.00	Rectangular	1.73	1	0.00	0.00	0.00
A1-6	Phase curvature	0.05	0.05	0.05	Gaussian	1.00	1	0.05	0.05	0.05
C1-1	Uncertainty of the RF power measurement equipment (e.g. spectrum analyzer, power meter)	0.14	0.26	0.26	Gaussian	1.00	1	0.14	0.26	0.26
A1-7	Impedance mismatch in the receiving chain	0.14	0.33	0.33	U-shaped	1.41	1	0.10	0.23	0.23
A1-8	Random uncertainty	0.10	0.10	0.10	Rectangular	1.73	1	0.06	0.06	0.06
Stage 1: Calibration measurement										
A1-9	Impedance mismatch between the receiving antenna and the network analyzer	0.05	0.05	0.05	U-shaped	1.41	1	0.04	0.04	0.04
A1-10	Positioning and pointing misalignment between the reference antenna and the receiving antenna	0.01	0.01	0.01	Rectangular	1.73	1	0.01	0.01	0.01
A1-11	Impedance mismatch between the reference antenna and the network analyzer.	0.05	0.05	0.05	U-shaped	1.41	1	0.04	0.04	0.04
A1-3	Quality of quiet zone	0.10	0.10	0.10	Gaussian	1.00	1	0.10	0.10	0.10
A1-4b	Polarization mismatch between the reference antenna and the receiving antenna	0.01	0.01	0.01	Rectangular	1.73	1	0.01	0.01	0.01
A1-5b	Mutual coupling between the reference antenna and the receiving antenna	0.00	0.00	0.00	Rectangular	1.73	1	0.00	0.00	0.00
A1-6	Phase curvature	0.05	0.05	0.05	Gaussian	1.00	1	0.05	0.05	0.05
C1-3	Uncertainty of the network analyzer	0.13	0.20	0.20	Gaussian	1.00	1	0.13	0.20	0.20
A1-12	Influence of the reference antenna feed cable	0.05	0.05	0.05	Rectangular	1.73	1	0.03	0.03	0.03
A1-13	Reference antenna feed cable loss measurement uncertainty	0.06	0.06	0.06	Gaussian	1.00	1	0.06	0.06	0.06
A1-14	Influence of the receiving antenna feed cable	0.05	0.05	0.05	Rectangular	1.73	1	0.03	0.03	0.03
C1-4	Uncertainty of the absolute gain of the reference antenna	0.50	0.43	0.43	Rectangular	1.73	1	0.29	0.25	0.25
A1-15	Uncertainty of the absolute gain of the receiving antenna	0.00	0.00	0.00	Rectangular	1.73	1	0.00	0.00	0.00

Combined standard uncertainty (1σ) (dB)	**0.44**	**0.54**	**0.54**
Expanded uncertainty (1.96σ - confidence interval of 95 %) (dB)	**0.87**	**1.06**	**1.06**
TRP summation error	**0.75**	**0.75**	**0.75**
Total MU	**1.15**	**1.30**	**1.30**

11.3.3 Compact Antenna Test Range

11.3.3.1 Measurement system description

Measurement system description is captured in clause 7.3.1, with the Compact Antenna Test Range measurement system setup depicted on figure 8.3-1.

11.3.3.2 Test procedure

11.3.3.2.1 Stage 1: Calibration

Calibration procedure for the Compact Antenna Test Range is captured in clause 8.3.

NOTE: This stage may be omitted provided calibration stage has been performed already during output power measurement.

11.3.3.2.2 Stage 2: BS measurement

The CATR testing procedure consists of the following steps:

1) Align BS with boresight of the range antenna.

2) Configure carrier at a power level according to the manufacturer's declared rated output power and test configuration.

3) Measure wanted and adjacent channel power for the frequency offsets both side of carrier frequency considering both polarizations of the range antenna. In multiple carrier case only offset frequencies below the lowest and above the offsets highest carrier frequency used shall be measured for ACLR; offsets in between carriers may be subject to CACLR.

4) Repeat step 3 for additional points for all necessary points needed for full TRP for the wanted signal and adjacent channel emissions.

5) Calculate ACLR or CACLR from the wanted signal TRP and the adjacent channel emissions TRP.

   The appropriate parameters in step 3 are:

   $P_{R\_desired,\ D}$: Measured mean power within the desired signal channel bandwidth for each carrier at the measurement equipment connector at D in figure 7.3.1-1.

   $P_{R\_emission,\ D}$: Measured mean emission power in the neighbouring channel bandwidth for each carrier at the measurement equipment connector at D in figure 7.3.1-1.

   Calculation of $Power_d$ and $Power_e$ is done using following formulas:

   $$Power_d = P_{R\_desired,\ D} + L_{TX\_cal,\ A\rightarrow D}$$

   $$Power_e = P_{R\_emission,\ D} + L_{TX\_cal,\ A\rightarrow D}$$

After calculation of TRP from power as shown in clause 6.3, calculate the OTA ACLR.

11.3.3.3 MU value derivation, FR1

Table 11.3.3.3-1 captures derivation of the expanded measurement uncertainty values for absolute OTA ACLR measurements in in Compact Antenna Test Range (Normal test conditions, FR1).

Table 11.3.3.3-2 captures derivation of the expanded measurement uncertainty values for relative OTA ACLR measurements in in Indoor Anechoic Chamber (Normal test conditions, FR1).

Table 11.3.3.3-1: CATR MU value derivation for the EIRP measurement of the absolute OTA ACLR, FR1

UID	Uncertainty source	Uncertainty value (dB)			Distribution of the probability	Divisor based on distribution shape	c_i	Standard uncertainty u_i (dB)		
		f ≤ 3 GHz	3 < f ≤ 4.2 GHz	4.2 < f ≤ 6 GHz				f ≤ 3 GHz	3 < f ≤ 4.2 GHz	4.2 < f ≤ 6 GHz
Stage 2: BS measurement										
A2-18a	Misalignment and pointing error of BS (for TRP)	0.30	0.30	0.30	Rectangular	1.73	1	0.17	0.17	0.17
C1-1	Uncertainty of the RF power measurement equipment (e.g. spectrum analyzer, power meter)	0.14	0.26	0.26	Gaussian	1.00	1	0.14	0.26	0.26
A2-2a	Standing wave between BS and test range antenna	0.21	0.21	0.21	U-shaped	1.41	1	0.15	0.15	0.15
A2-3	RF leakage (SGH connector terminated & test range antenna connector cable terminated)	0.00	0.00	0.00	Gaussian	1.00	1	0.00	0.00	0.00
A2-4a	QZ ripple experienced by BS	0.09	0.09	0.09	Gaussian	1.00	1	0.09	0.09	0.09
A2-12	Frequency flatness of test system	0.25	0.25	0.25	Gaussian	1.00	1	0.25	0.25	0.25
Stage 1: Calibration measurement										
C1-3	Uncertainty of the network analyzer	0.13	0.20	0.20	Gaussian	1.00	1	0.13	0.20	0.20
A2-5a	Mismatch of receiver chain between receiving antenna and measurement receiver	0.13	0.33	0.33	U-shaped	1.41	1	0.09	0.23	0.23
A2-6	Insertion loss of receiver chain	0.18	0.18	0.18	Rectangular	1.73	1	0.10	0.10	0.10
A2-3	RF leakage (SGH connector terminated & test range antenna connector cable terminated)	0.00	0.00	0.00	Gaussian	1.00	1	0.00	0.00	0.00
A2-7	Influence of the calibration antenna feed cable	0.02	0.02	0.02	U-shaped	1.41	1	0.02	0.02	0.02
C1-4	Uncertainty of the absolute gain of the reference antenna	0.50	0.43	0.43	Rectangular	1.73	1	0.29	0.25	0.25
A2-8	Misalignment positioning system	0.00	0.00	0.00	Exp. normal	2.00	1	0.00	0.00	0.00
A2-18b	Misalignment and pointing error of calibration antenna (for TRP)	0.50	0.50	0.50	Exp. normal	2.00	1	0.25	0.25	0.25
A2-9	Rotary joints	0.05	0.05	0.05	U-shaped	1.41	1	0.03	0.03	0.03
A2-2b	Standing wave between calibration antenna and test range antenna	0.09	0.09	0.09	U-shaped	1.41	1	0.06	0.06	0.06
A2-4b	QZ ripple experienced by calibration antenna	0.01	0.01	0.01	Gaussian	1.00	1	0.01	0.01	0.01
A2-11	Switching uncertainty	0.26	0.26	0.26	Rectangular	1.73	1	0.15	0.15	0.15
Combined standard uncertainty (1σ) (dB)								**0.59**	**0.67**	**0.67**
Expanded uncertainty (1.96σ - confidence interval of 95 %) (dB)								**1.16**	**1.31**	**1.31**
TRP summation error								**0.75**	**0.75**	**0.75**
Total MU								**1.39**	**1.51**	**1.51**

Table 11.3.3.3-2: CATR MU value derivation for the EIRP measurement of the relative OTA ACLR, FR1

UID	Uncertainty source	Uncertainty value (dB)			Distribution of the probability	Divisor based on distribution shape	c_i	Standard uncertainty u_i (dB)		
		f ≤ 3 GHz	3 < f ≤ 4.2 GHz	4.2 < f ≤ 6 GHz				f ≤ 3 GHz	3 < f ≤ 4.2 GHz	4.2 < f ≤ 6 GHz
Stage 2: BS measurement										
A2-18a	Misalignment and pointing error of BS (a) (for TRP)	0.30	0.30	0.30	Rectangular	1.73	1	0.17	0.17	0.17
C1-1	Uncertainty of the RF power measurement equipment (e.g. spectrum analyzer, power meter)	0.14	0.26	0.26	Gaussian	1.00	1	0.14	0.26	0.26
A2-4a	QZ ripple experienced by BS	0.09	0.09	0.09	Gaussian	1.00	1	0.09	0.09	0.09
A2-12	Frequency flatness of test system	0.25	0.25	0.25	Gaussian	1.00	1	0.25	0.25	0.25
Stage 1: Calibration measurement										
C1-3	Uncertainty of the network analyzer	0.13	0.20	0.20	Gaussian	1.00	1	0.13	0.20	0.20
A2-5a	Mismatch of receiver chain between receiving antenna and measurement receiver	0.13	0.33	0.33	U-shaped	1.41	1	0.09	0.23	0.23
A2-6	Insertion loss of receiver chain	0.18	0.18	0.18	Rectangular	1.73	1	0.10	0.10	0.10
A2-11	Switching uncertainty	0.26	0.26	0.26	Rectangular	1.73	1	0.15	0.15	0.15
Combined standard uncertainty (1σ) (dB)								**0.42**	**0.54**	**0.54**
Expanded uncertainty (1.96σ - confidence interval of 95 %) (dB)								**0.83**	**1.06**	**1.06**
TRP summation error								**0.75**	**0.75**	**0.75**
Total MU								**1.12**	**1.30**	**1.30**

11.3.3.4 MU value derivation, FR2

A CATR MU budget was assessed in order to determine acceptable MU for the EIRP accuracy measurement in FR2. The CATR test setup and calibration and measurement procedures for FR2 are expected to be similar to those of FR1, although the test chamber dimensions and associated MU values will scale due to the shorter wavelengths and larger relative array apertures. However, it is noted that in order to achieve the test instrument uncertainties that were assumed, calibration of the spectrum analyzer may be needed.

Table 11.3.3.4-1 captures derivation of the expanded measurement uncertainty values for absolute OTA ACLR measurements in in Compact Antenna Test Range (Normal test conditions, FR2).

Table 11.3.3.4-2 captures derivation of the expanded measurement uncertainty values for relative OTA ACLR measurements in in Compact Antenna Test Range (Normal test conditions, FR2).

Table 11.3.3.4-1: CATR MU value derivation for the EIRP measurement of the absolute OTA ACLR, FR2

UID	Uncertainty source	Uncertainty value (dB)		Distribution of the probability	Divisor based on distribution shape	c_i	Standard uncertainty u_i (dB)	
		24.25 < f ≤ 29.5 GHz	37 < f ≤ 43.5 GHz				24.25 < f ≤ 29.5 GHz	37 < f ≤ 43.5 GHz
Stage 2: BS measurement								
A2-1a	Misalignment and pointing error of BS (for EIRP)	0.20	0.20	Exp. normal	2.00	1	0.10	0.10
C1-7	Uncertainty of the RF power measurement equipment (e.g. spectrum analyzer, power meter) - low power (UEM, absolute ACLR)	0.90	0.90	Gaussian	1.00	1	0.90	0.90
A2-2a	Standing wave between BS and test range antenna	0.03	0.03	U-shaped	1.41	1	0.02	0.02
A2-3	RF leakage (SGH connector terminated & test range antenna connector cable terminated)	0.01	0.01	Gaussian	1.00	1	0.01	0.01
A2-4a	QZ ripple experienced by BS	0.40	0.40	Gaussian	1.00	1	0.40	0.40
A2-12	Frequency flatness of test system	0.25	0.25	Gaussian	1.00	1	0.25	0.25
Stage 1: Calibration measurement								
C1-3	Uncertainty of the network analyzer	0.30	0.30	Gaussian	1.00	1	0.30	0.30
A2-5b	Mismatch of receiver chain for low power	0.72	0.72	U-shaped	1.41	1	0.51	0.51
A2-6	Insertion loss in receiver chain	0.00	0.00	Rectangular	1.73	1	0.00	0.00
C2-3	RF leakage (SGH connector terminated & test range antenna connector cable terminated)	0.01	0.01	Gaussian	1.00	1	0.01	0.01
A2-7	Influence of the calibration antenna feed cable	0.21	0.29	U-shaped	1.41	1	0.15	0.21
C1-4	Uncertainty of the absolute gain of the reference antenna	0.52	0.52	Rectangular	1.73	1	0.30	0.30
A2-8	Misalignment positioning system	0.00	0.00	Exp. normal	2.00	1	0.00	0.00
A2-1b	Misalignment and pointing error of calibration antenna (for EIRP)	0.00	0.00	Exp. normal	2.00	1	0.00	0.00
A2-9	Rotary joints	0.00	0.00	U-shaped	1.41	1	0.00	0.00
A2-2b	Standing wave between calibration antenna and test range antenna	0.09	0.09	U-shaped	1.41	1	0.06	0.06
A2-4b	QZ ripple experienced by calibration antenna	0.01	0.01	Gaussian	1.00	1	0.01	0.01
A2-11	Switching uncertainty	0.10	0.10	Rectangular	1.73	1	0.06	0.06
Combined standard uncertainty (1σ) (dB)							**1.23**	**1.24**
Expanded uncertainty (1.96σ - confidence interval of 95 %) (dB)							**2.41**	**2.43**
TRP summation error							**1.20**	**1.20**
Total MU							**2.69**	**2.71**

Table 11.3.3.4-2: CATR MU value derivation for the EIRP measurement of the relative OTA ACLR, FR2

UID	Uncertainty source	Uncertainty value (dB)		Distribution of the probability	Divisor based on distribution shape	c_i	Standard uncertainty u_i (dB)	
		24.25 < f ≤ 29.5 GHz	37 < f ≤ 43.5 GHz				24.25 < f ≤ 29.5 GHz	37 < f ≤ 43.5 GHz
Stage 2: BS measurement								
A2-1a	Misalignment and pointing error of BS (for EIRP)	0.20	0.20	Exp. normal	2.00	1	0.10	0.10
C1-8	Uncertainty of the RF power measurement equipment (e.g. spectrum analyzer, power meter) - relative (ACLR)	0.75	0.90	Gaussian	1.00	1	0.75	0.90
A2-4a	QZ ripple experienced by BS	0.40	0.40	Gaussian	1.00	1	0.40	0.40
A2-12	Frequency flatness of test system	0.25	0.25	Gaussian	1.00	1	0.25	0.25
Stage 1: Calibration measurement								
C1-3	Uncertainty of the network analyzer	0.30	0.30	Gaussian	1.00	1	0.30	0.30
A2-5a	Mismatch of receiver chain between receiving antenna and measurement receiver	0.43	0.57	U-shaped	1.41	1	0.30	0.40
A2-6	Insertion loss in receiver chain	0.00	0.00	Rectangular	1.73	1	0.00	0.00
A2-11	Switching uncertainty	0.10	0.10	Rectangular	1.73	0	0.06	0.06
Combined standard uncertainty (1σ) (dB)							**0.99**	**1.14**
Expanded uncertainty (1.96σ - confidence interval of 95 %) (dB)							**1.94**	**2.23**
TRP summation error							**1.20**	**1.20**
Total MU							**2.28**	**2.54**

11.3.4 Near Field Test Range

11.3.4.1 Measurement system description

Measurement system description is captured in clause 7.5.1.

In case of OTA ACLR measurement, the NF to FF transform is not needed since ACLR is based on TRP.

11.3.4.2 Test procedure

11.3.4.2.1 Stage 1: Calibration

Calibration procedure for the Near Field Test Range is captured in clause 8.5.

11.3.4.2.2 Stage 2: BS measurement

The NFTR procedure for absolute ACLR OTA measurement consists of the following steps:

1. Configure TX branch and carrier according to the required test configuration
2. Measure in Near Field ACLR and CALCR for the frequency offsets both side of carrier frequency for both polarizations. In multiple carrier case only offset frequencies below the lowest and above the offsets highest carrier frequency used shall be measured.
   a. Power is measured Near Field – no NF to FF transform is applied.
   b. Full sphere power is measured with using a defined sampling grid (refer to clause 6.3 for proper measurement grids).
3. Calculate TRP.

11.3.4.3 MU value derivation, FR1

Table 11.3.4.3-1 captures derivation of the expanded measurement uncertainty values for OTA ACLR measurements in NFTR (Normal test conditions, FR1).

Table 11.3.4.3-1: NFTR MU value derivation for absolute ACLR measurement

UID	Uncertainty source	Uncertainty value (dB)			Distribution of the probability	Divisor based on distribution shape	c_i	Standard uncertainty u_i (dB)		
		f ≤ 3 GHz	3 < f ≤ 4.2 GHz	4.2 < f ≤ 6 GHz				f ≤ 3 GHz	3 < f ≤ 4.2 GHz	4.2 < f ≤ 6 GHz
Stage 2: BS measurement										
A3-1	Axes intersection	0.00	0.00	0.00	Gaussian	1.00	1	0.00	0.00	0.00
A3-2	Axes orthogonality	0.00	0.00	0.00	Gaussian	1.00	1	0.00	0.00	0.00
A3-3	Horizontal pointing	0.00	0.00	0.00	Gaussian	1.00	1	0.00	0.00	0.00
A3-4	Probe vertical position	0.00	0.00	0.00	Gaussian	1.00	1	0.00	0.00	0.00
A3-5	Probe horizontal/vertical pointing	0.00	0.00	0.00	Gaussian	1.00	1	0.00	0.00	0.00
A3-6	Measurement distance	0.00	0.00	0.00	Gaussian	1.00	1	0.00	0.00	0.00
A3-7	Amplitude and phase drift	0.00	0.00	0.00	Gaussian	1.00	1	0.00	0.00	0.00
A3-8	Amplitude and phase noise	0.02	0.02	0.02	Gaussian	1.00	1	0.02	0.02	0.02
A3-9	Leakage and crosstalk	0.00	0.00	0.00	Gaussian	1.00	1	0.00	0.00	0.00
A3-10	Amplitude non-linearity	0.04	0.04	0.04	Gaussian	1.00	1	0.04	0.04	0.04
A3-11	Amplitude and phase shift in rotary joints	0.00	0.00	0.00	Gaussian	1.00	1	0.00	0.00	0.00
A3-12	Channel balance amplitude and phase	0.00	0.00	0.00	Gaussian	1.00	1	0.00	0.00	0.00
A3-13	Probe polarization amplitude and phase	0.00	0.00	0.00	Gaussian	1.00	1	0.00	0.00	0.00
A3-14	Probe pattern knowledge	0.00	0.00	0.00	Gaussian	1.00	1	0.00	0.00	0.00
A3-15	Multiple reflections	0.00	0.00	0.00	Gaussian	1.00	1	0.00	0.00	0.00
A3-16	Room scattering	0.09	0.09	0.09	Gaussian	1.00	1	0.09	0.09	0.09
A3-17	BS support scattering	0.00	0.00	0.00	Gaussian	1.00	1	0.00	0.00	0.00
A3-21	Positioning	0.03	0.03	0.03	Rectangular	1.73	1	0.02	0.02	0.02
A3-22	Probe array uniformity	0.06	0.06	0.06	Gaussian	1.00	1	0.06	0.06	0.06
A3-23	Mismatch of receiver chain	0.28	0.28	0.28	U-Shaped	1.41	1	0.20	0.20	0.20
A3-24	Insertion loss of receiver chain	0.00	0.00	0.00	Gaussian	1.00	1	0.00	0.00	0.00
A3-25	Uncertainty of the absolute gain of the probe antenna	0.00	0.00	0.00	Gaussian	1.00	1	0.00	0.00	0.00
C1-1	Uncertainty of the RF power measurement equipment (e.g. spectrum analyzer, power meter)	0.14	0.26	0.26	Gaussian	1.00	1	0.14	0.26	0.26
A3-26	Measurement repeatability - positioning repeatability	0.15	0.15	0.15	Gaussian	1.00	1	0.15	0.15	0.15
A3-33	Frequency flatness of test system	0.25	0.25	0.25	Gaussian	1.00	1	0.25	0.25	0.25
Stage 1: Calibration measurement										
C1-3	Uncertainty of the network analyzer	0.13	0.20	0.20	Gaussian	1.00	1	0.13	0.20	0.20
A3-27	Mismatch of receiver chain	0.00	0.00	0.00	Gaussian	1.00	1	0.00	0.00	0.00
A3-28	Insertion loss of receiver chain	0.00	0.00	0.00	Gaussian	1.00	1	0.00	0.00	0.00
A3-29	Mismatch in the connection of the calibration antenna	0.02	0.02	0.02	U-Shaped	1.41	1	0.01	0.01	0.01
A3-30	Influence of the calibration antenna feed cable	0.00	0.00	0.00	Gaussian	1.00	1	0.00	0.00	0.00
A3-31	Influence of the probe antenna cable	0.00	0.00	0.00	Gaussian	1.00	1	0.00	0.00	0.00
C1-4	Uncertainty of the absolute gain of the reference antenna	0.50	0.43	0.43	Rectangular	1.73	1	0.29	0.25	0.25
A3-32	Short term repeatability	0.09	0.09	0.09	Gaussian	1.00	1	0.09	0.09	0.09
Combined standard uncertainty (1σ) (dB)								**0.52**	**0.56**	**0.56**
Expanded uncertainty (1.96σ - confidence interval of 95 %) (dB)								**1.01**	**1.10**	**1.10**
TRP summation error								**0.75**	**0.75**	**0.75**
Total MU								**1.26**	**1.33**	**1.33**

11.3.5 Reverberation Chamber

11.3.5.1 Measurement system description

Measurement system description is captured in clause 7.7.1.

11.3.5.2 Test procedure

11.3.5.2.1 Stage 1: Calibration

Calibration procedure for the Reverberation chamber is captured in clause 8.7.

11.3.5.2.2 Stage 2: BS measurement

The RC test procedure is described in clause 11.2.5.2.2 (i.e. the same procedure as for the OTA BS output power).

11.3.5.3 MU value derivation, FR1

Table 11.3.5.3-1 captures derivation of the expanded measurement uncertainty values for relative ACLR measurements in Reverberation Chamber (Normal test conditions, FR1).

Table 11.3.5.3-2 captures derivation of the expanded measurement uncertainty values for absolute ACLR measurements in Reverberation Chamber (Normal test conditions, FR1).

Table 11.3.5.3-1: Reverberation Chamber MU value derivation for relative ACLR measurement

UID	Uncertainty source	Uncertainty value (dB)			Distribution of the probability	Divisor based on distribution shape	c_i	Standard uncertainty u_i (dB)		
		f ≤ 3 G Hz	3 < f ≤ 4.2 GHz	4.2 < f ≤ 6 GHz				f ≤ 3 G Hz	3 < f ≤ 4.2 GHz	4.2 < f ≤ 6 GHz
Stage 2: BS measurement										
C1-1	Uncertainty of the RF power measurement equipment (e.g. spectrum analyzer, power meter)	0.14	0.26	0.26	Gaussian	1.00	1	0.14	0.26	0.26
A6-1	Impedance mismatch in the receiving chain	0.20	0.20	0.20	U-shaped	1.41	1	0.14	0.14	0.14
A6-2	Random uncertainty	0.10	0.10	0.10	Rectangular	1.73	1	0.06	0.06	0.06
Stage 1: Calibration measurement										
A6-3	Reference antenna radiation efficiency	0.20	0.20	0.20	Gaussian	1	1	0.20	0.20	0.20
A6-4	Mean value estimation of reference antenna mismatch efficiency	0.15	0.15	0.15	Gaussian	1	1	0.15	0.15	0.15
C1-3	Uncertainty of the network analyzer	0.13	0.20	0.20	Gaussian	1	1	0.13	0.20	0.20
A6-5	Influence of the reference antenna feed cable	0.20	0.20	0.20	Gaussian	1	1	0.20	0.20	0.20
A6-6	Mean value estimation of transfer function	0.27	0.27	0.27	Gaussian	1	1	0.27	0.27	0.27
A6-7	Uniformity of transfer function	0.50	0.50	0.50	Gaussian	1	1	0.50	0.50	0.50
Combined standard uncertainty (1σ) (dB)								**0.70**	**0.75**	**0.75**
Expanded uncertainty (1.96σ - confidence interval of 95 %) (dB)								**1.37**	**1.46**	**1.46**

Table 11.3.5.3-2: Reverberation chamber MU value derivation for absolute ACLR measurement

UID	Uncertainty source	Uncertainty value (dB)			Distribution of the probability	Divisor based on distribution shape	c_i	Standard uncertainty u_i (dB)		
		f ⩽ 3 GHz	3 < f ⩽ 4.2 GHz	4.2 < f ⩽ 6 GHz				f ⩽ 3 GHz	3 < f ⩽ 4.2 GHz	4.2 < f ⩽ 6 GHz
Stage 2: BS measurement										
C1-1	Uncertainty of the RF power measurement equipment (e.g. spectrum analyzer, power meter)	0.14	0.26	0.26	Gaussian	1.00	1	0.14	0.26	0.26
A6-1	Impedance mismatch in the receiving chain	0.20	0.20	0.20	U-shaped	1.41	1	0.14	0.14	0.14
A6-2	Random uncertainty	0.10	0.10	0.10	Rectangular	1.73	1	0.06	0.06	0.06
Stage 1: Calibration measurement										
A6-3	Reference antenna radiation efficiency	0.20	0.20	0.20	Gaussian	1.00	1	0.20	0.20	0.20
A6-4	Mean value estimation of reference antenna mismatch efficiency	0.15	0.15	0.15	Gaussian	1.00	1	0.15	0.15	0.15
C1-3	Uncertainty of the network analyzer	0.13	0.20	0.20	Gaussian	1.00	1	0.13	0.20	0.20
A6-5	Influence of the reference antenna feed cable	0.20	0.20	0.20	Gaussian	1.00	1	0.20	0.20	0.20
A6-6	Mean value estimation of transfer function	0.27	0.27	0.27	Gaussian	1.00	1	0.27	0.27	0.27
A6-7	Uniformity of transfer function	0.50	0.50	0.50	Gaussian	1.00	1	0.50	0.50	0.50
Combined standard uncertainty (1σ) (dB)								**0.70**	**0.75**	**0.75**
Expanded uncertainty (1.96σ - confidence interval of 95 %) (dB)								**1.37**	**1.46**	**1.46**

11.3.5.4 MU value derivation, FR2

Table 11.3.5.4-1 captures derivation of the expanded measurement uncertainty values for relative ACLR measurements in Reverberation Chamber (Normal test conditions, FR2).

Table 11.3.5.4-2 captures derivation of the expanded measurement uncertainty values for absolute ACLR measurements in Reverberation Chamber (Normal test conditions, FR2).

Table 11.3.5.4-1: Reverberation chamber MU value derivation for absolute ACLR measurement, FR2

UID	Uncertainty source	Uncertainty value (dB)		Distribution of the probability	Divisor based on distribution shape	c_i	Standard uncertainty u_i (dB)	
		24.25 < f ⩽ 29.5 GHz	37 < f ⩽ 43.5 GHz				24.25 < f ⩽ 29.5 GHz	37 < f ⩽ 43.5 GHz
Stage 2: BS measurement								
C1-7	Uncertainty of the RF power measurement equipment (e.g. spectrum analyzer, power meter) - low power (UEM, absolute ACLR)	0.90	0.90	Gaussian	1.00	1	0.90	0.90
A6-1	Impedance mismatch in the receiving chain	0.20	0.20	U-shaped	1.41	1	0.14	0.14
A6-2	Random uncertainty	0.10	0.10	Rectangular	1.73	1	0.06	0.06
Stage 1: Calibration measurement								
A6-3	Reference antenna radiation efficiency	0.30	0.30	Gaussian	1.00	1	0.30	0.30
A6-4	Mean value estimation of reference antenna mismatch efficiency	0.27	0.27	Gaussian	1.00	1	0.27	0.27
C1-3	Uncertainty of the network analyzer	0.30	0.30	Gaussian	1.00	1	0.30	0.30
A6-5	Influence of the reference antenna feed cable	0.20	0.20	Gaussian	1.00	1	0.20	0.20
A6-6	Mean value estimation of transfer function	0.27	0.27	Gaussian	1.00	1	0.27	0.27
A6-7	Uniformity of transfer function	0.50	0.50	Gaussian	1.00	1	0.50	0.50
Combined standard uncertainty (1σ) (dB)							**1.20**	**1.20**
Expanded uncertainty (1.96σ - confidence interval of 95 %) (dB)							**2.36**	**2.36**

Table 11.3.5.4-2: Reverberation chamber MU value derivation for relative ACLR measurement, FR2

UID	Uncertainty source	Uncertainty value (dB)		Distribution of the probability	Divisor based on distribution shape	c_i	Standard uncertainty u_i (dB)	
		24.25 < f ⩽ 29.5 GHz	37 < f ⩽ 43.5 GHz				24.25 < f ⩽ 29.5 GHz	37 < f ⩽ 43.5 GHz
Stage 2: BS measurement								
C1-8	Uncertainty of the RF power measurement equipment (e.g. spectrum analyzer, power meter) - relative (ACLR)	0.75	0.90	Gaussian	1.00	1	0.75	0.90
A6-1	Impedance mismatch in the receiving chain	0.20	0.20	U-shaped	1.41	1	0.14	0.14
A6-2	Random uncertainty	0.10	0.10	Rectangular	1.73	1	0.06	0.06
Stage 1: Calibration measurement								
A6-3	Reference antenna radiation efficiency	0.30	0.30	Gaussian	1.00	1	0.30	0.30
A6-4	Mean value estimation of reference antenna mismatch efficiency	0.27	0.27	Gaussian	1.00	1	0.27	0.27
C1-3	Uncertainty of the network analyzer	0.30	0.30	Gaussian	1.00	1	0.30	0.30
A6-5	Influence of the reference antenna feed cable	0.20	0.20	Gaussian	1.00	1	0.20	0.20
A6-6	Mean value estimation of transfer function	0.27	0.27	Gaussian	1.00	1	0.27	0.27
A6-7	Uniformity of transfer function	0.50	0.50	Gaussian	1.00	1	0.50	0.50
Combined standard uncertainty (1σ) (dB)							**1.10**	**1.20**
Expanded uncertainty (1.96σ - confidence interval of 95 %) (dB)							**2.15**	**2.36**

11.3.6 Plane Wave Synthesizer

11.3.6.1 Measurement system description

Measurement system description is captured in clause 7.6.1.

11.3.6.2 Test procedure

11.3.6.2.1 Stage 1: Calibration

Calibration procedure for the Plane Wave Synthesizer is captured in clause 8.6.

NOTE: This stage may be omitted provided calibration stage has been performed already during output power measurement.

11.3.6.2.2 Stage 2: BS measurement

The PWS testing procedure consists of the following steps:

1) Align BS with boresight of the range antenna.

2) Configure carrier at a power level according to the manufacturer's declared rated output power and test configuration.

3) Measure wanted and adjacent channel power for the frequency offsets both side of carrier frequency considering both polarizations of the range antenna. In multiple carrier case only offset frequencies below the lowest and above the offsets highest carrier frequency used shall be measured for ACLR; offsets in between carriers may be subject to CACLR.

4) Repeat step 3 for additional points for all necessary points needed for full TRP for the wanted signal and adjacent channel emissions.

5) Calculate ACLR or CACLR from the wanted signal TRP and the adjacent channel emissions TRP.

The appropriate parameters in step 3 are:

$P_{R\_desired,\ C}$: Measured mean power within the desired signal channel bandwidth for each carrier at the measurement equipment connector at C in figure 7.6.1-1.

$P_{R\_emission,\ C}$: Measured mean emission power in the neighbouring channel bandwidth for each carrier at the measurement equipment connector at C in figure 7.6.1-1.

Calculation of $Power_d$ and $Power_e$ is done using following formulas:

$Power_c = P_{R\_desired,\ C} + L$

$Power_e = P_{R\_emission,\ C} + L$

After calculation of TRP from power as shown in clause 6.3, calculate the OTA ACLR.

11.3.6.3 MU value derivation, FR1

The MU value derivation for absolute ACLR measurements is the same as in clause 11.2.6.3 (i.e. OTA BS output power).

Table 11.3.6.3-1 captures derivation of the expanded measurement uncertainty values for relative ACLR measurements in PWS.

Table 11.3.6.3-2 captures derivation of the expanded measurement uncertainty values for absolute ACLR measurements in PWS.

Table 11.3.6.3-1: PWS MU value derivation for relative ACLR measurement

UID	Uncertainty source	Uncertainty value (dB)			Distribution of the probability	Divisor based on distribution shape	c_i	Standard uncertainty u_i (dB)		
		f ≤ 3 GHz	3 < f ≤ 4.2 GHz	4.2 < f ≤ 6 GHz				f ≤ 3 GHz	3 < f ≤ 4.2 GHz	4.2 < f ≤ 6 GHz
Stage 2: BS measurement										
A7-1a	Misalignment and pointing error of BS	0.10	0.10	0.10	Rectangular	1.73	1	0.06	0.06	0.06
C1-1	Uncertainty of the RF power measurement equipment (e.g. spectrum analyzer, power meter)	0.14	0.26	0.26	Gaussian	1.00	1	0.14	0.26	0.26
A7-4a	QZ ripple experienced by BS	0.42	0.43	0.57	Rectangular	1.73	1	0.24	0.25	0.33
A7-13	Frequency flatness of test system	0.13	0.13	0.13	Rectangular	1.73	1	0.08	0.08	0.08
Stage 1: Calibration measurement										
C1-3	Uncertainty of the network analyzer	0.13	0.20	0.20	Gaussian	1.00	1	0.13	0.20	0.20
A7-6	Mismatch (i.e. reference antenna, network analyser and reference cable)	0.13	0.33	0.33	U-shaped	1.41	1	0.09	0.23	0.23
A7-7	Insertion loss of receiver chain	0.18	0.18	0.18	Rectangular	1.73	1	0.10	0.10	0.10
A7-11	Switching uncertainty	0.02	0.02	0.02	Rectangular	1.73	1	0.01	0.01	0.01
Combined standard uncertainty (1σ) (dB)								**0.35**	**0.49**	**0.54**
Expanded uncertainty (1.96σ - confidence interval of 95 %) (dB)								**0.69**	**0.96**	**1.05**
TRP summation error								**0.75**	**0.75**	**0.75**
Total MU								**1.02**	**1.22**	**1.29**

Table 11.3.6.3-2: PWS MU value derivation for absolute ACLR measurement

UID	Uncertainty source	Uncertainty value (dB)			Distribution of the probability	Divisor based on distribution shape	c_i	Standard uncertainty u_i (dB)		
		f ≤ 3 GHz	3 < f ≤ 4.2 GHz	4.2 < f ≤ 6 GHz				f ≤ 3 GHz	3 < f ≤ 4.2 GHz	4.2 < f ≤ 6 GHz
Stage 2: BS measurement										
A7-1a	Misalignment and pointing error of BS	0.10	0.10	0.10	Rectangular	1.73	1	0.06	0.06	0.06
C1-1	Uncertainty of the RF power measurement equipment (e.g. spectrum analyzer, power meter)	0.14	0.26	0.26	Gaussian	1.00	1	0.14	0.26	0.26
A7-2a	Longitudinal position uncertainty (i.e. standing wave and imperfect field synthesis) for BS antenna	0.05	0.14	0.20	Rectangular	1.73	1	0.03	0.08	0.12
A7-3	RF leakage (calibration antenna connector terminated)	0.09	0.09	0.09	Gaussian	1.00	1	0.09	0.09	0.09
A7-4a	QZ ripple experienced by BS	0.42	0.43	0.57	Rectangular	1.73	1	0.24	0.25	0.33
A7-5	Miscellaneous uncertainty	0.00	0.00	0.00	Gaussian	1.00	1	0.00	0.00	0.00
A7-14	System non-linearity	0.10	0.10	0.15	Rectangular	1.73	1	0.06	0.06	0.09
A7-13	Frequency flatness of test system	0.13	0.13	0.13	Rectangular	1.73	1	0.08	0.08	0.08
Stage 1: Calibration measurement										
C1-3	Uncertainty of the network analyzer	0.13	0.20	0.20	Gaussian	1.00	1	0.13	0.20	0.20
A7-6	Mismatch (i.e. reference antenna, network analyser and reference cable)	0.13	0.33	0.33	U-shaped	1.41	1	0.09	0.23	0.23
A7-7	Insertion loss of receiver chain	0.18	0.18	0.18	Rectangular	1.73	1	0.10	0.10	0.10
A7-3	RF leakage (calibration antenna connector terminated)	0.09	0.09	0.09	Gaussian	1.00	1	0.09	0.09	0.09
A7-8	Influence of the calibration antenna feed cable	0.10	0.10	0.10	Rectangular	1.73	1	0.06	0.06	0.06
C1-4	Uncertainty of the absolute gain of the reference antenna	0.50	0.43	0.43	Rectangular	1.73	1	0.29	0.25	0.25
A7-9	Misalignment of positioning system	0.00	0.00	0.00	Exp. normal	2.00	1	0.00	0.00	0.00
A7-1b	Misalignment and pointing error of calibration antenna	0.05	0.05	0.05	Rectangular	1.73	1	0.03	0.03	0.03
A7-10	Rotary joints	0.00	0.00	0.00	U-shaped	1.73	1	0.00	0.00	0.00
A7-2b	Longitudinal position uncertainty (i.e. standing wave and imperfect field synthesis) for calibration antenna	0.12	0.12	0.15	Rectangular	1.73	1	0.07	0.07	0.09
A7-4b	QZ ripple experienced by calibration antenna	0.20	0.20	0.20	Rectangular	1.73	1	0.12	0.12	0.12
A7-11	Switching uncertainty	0.02	0.02	0.02	Rectangular	1.73	1	0.01	0.01	0.01
A7-12	Field repeatability	0.06	0.12	0.15	Gaussian	1.00	1	0.06	0.12	0.15
Combined standard uncertainty (1σ) (dB)								**0.50**	**0.61**	**0.66**
Expanded uncertainty (1.96σ - confidence interval of 95 %) (dB)								**0.98**	**1.19**	**1.29**
TRP summation error								**0.75**	**0.75**	**0.75**
Total MU								**1.24**	**1.40**	**1.49**

11.3.7 Maximum accepted test system uncertainty

For the frequency range up to 4.2 GHz, the same MU values as for E-UTRA were adopted. It is expected that the test chamber setup, calibration and measurement procedures for E-UTRA and NR will be highly similar. All uncertainty factors were judged to be the same.

For the frequency range 4.2 - 6 GHz, all MU factors, including instrumentation related MU were judged to be the same as for the 3 - 4.2 GHz range, and thus the total MU for 4.2 – 6 GHz is the same as for 3 - 4.2 GHz. This assessment was made under the assumption of testing BS designed for licensed spectrum; for unlicensed spectrum the MU may differ.

For CATR the expanded MU is established as a root sum square combining of the dB values for the MU and the SE (see clause 6.3.6), the MU for absolute ACLR was decided to be 2.7 dB for the frequency range 24.25 < f < 29.5 GHz and 2.7 dB for the frequency range 37 < f < 43.5 GHz. The MU for relative ACLR was decided to be 2.3 dB for the frequency range 24.25 < f < 29.5 GHz and 2.6 dB for the frequency range 37 < f < 43.5 GHz.

Maximum test system uncertainties derivation methodology was described in clause 5.1. The maximum accepted test system uncertainty values was derived based on test system specific values.

According to the methodology referred above, the common maximum accepted test system uncertainty values for absolute and relative OTA ACLR tests can be derived from values captured in tables 11.3.7-1 to 11.3.7-4, derived based on the expanded uncertainty u_e (1.96σ - confidence interval of 95 %) values. The common maximum accepted test system uncertainty values are applicable for all test methods addressing OTA ACLR test requirement.

Table 11.3.7-1: Test system specific MU values for the absolute OTA ACLR, Normal test conditions, FR1

	Expanded uncertainty u_e (dB)		
	f ≤ 3 GHz	**3 GHz < f ≤ 4.2 GHz**	**4.2 GHz < f ≤ 6 GHz**
Indoor Anechoic Chamber	1.15	1.30	1.30
Compact Antenna Test Range	1.39	1.51	1.51
Near Field Test Range	1.26	1.33	1.33
Plane Wave Synthesizer	1.24	1.40	1.49
Reverberation Chamber	1.37	1.46	1.46
Common maximum accepted test system uncertainty	**2.2**	**2.7**	**2.7**

Table 11.3.7-2: Test system specific MU values for the relative OTA ACLR, Normal test conditions, FR1

	Expanded uncertainty u_e (dB)		
	f ≤ 3 GHz	**3 GHz < f ≤ 4.2 GHz**	**4.2 GHz < f ≤ 6 GHz**
Indoor Anechoic Chamber	-	-	-
Compact Antenna Test Range	1.12	1.30	1.30
Near Field Test Range	-	-	-
Plane Wave Synthesizer	1.02	1.22	1.29
Reverberation Chamber	1.37	1.46	1.46
Common maximum accepted test system uncertainty	**1.0**	**1.2**	**1.2**

Table 11.3.7-3: Test system specific MU values for the absolute OTA ACLR, Normal test conditions, FR2

	Expanded uncertainty u_e (dB)		
	24.25 < f < 29.5 GHz	**37 < f < 43.5 GHz**	**43.5 < f < 48.2 GHz**

Indoor Anechoic Chamber			-
Compact Antenna Test Range	2.69	2.71	-
Near Field Test Range			-
Reverberation Chamber	2.36	2.36	-
Plane Wave Synthesizer			-
Common maximum accepted test system uncertainty	**2.7**	**2.7**	**2.9**

Table 11.3.7-4: Test system specific MU values for the relative OTA ACLR, Normal test conditions, FR2

	Expanded uncertainty u_e (dB)		
	24.25 < f < 29.5 GHz	**37 < f < 43.5 GHz**	**43.5 < f < 48.2 GHz**
Indoor Anechoic Chamber	-	-	-
Compact Antenna Test Range	2.28	2.54	-
Near Field Test Range	-	-	-
Reverberation Chamber	2.15	2.36	-
Plane Wave Synthesizer	-	-	-
Common maximum accepted test system uncertainty	**2.3**	**2.6**	**2.8 (NOTE)**
NOTE: MU estimation for 43.5 < f < 48.2 GHz was derived based on the linear approximation (based on MU values for lower frequency ranges). MU extrapolation approach was used instead of the typical derivation of the Expanded MU based on the MU budget calculations, as in case of lower frequency ranges.			

For relative ACLR, the MU value was agreed to be 1.0 dB for 0 – 3 GHz bands and 1.2 dB for 3 – 6 GHz bands. The MU in 4.2 - 6 GHz is valid for BS designed to operate in licensed spectrum.

For absolute ACLR, the MU value was agreed to be 2.2 dB for 0 – 3 GHz bands and 2.7 dB for 3 – 6 GHz bands. The MU in 4.2 - 6 GHz is valid for BS designed to operate in licensed spectrum.

An overview of the MU values for all the requirements is captured in clause 17.

11.3.8 Test Tolerance for OTA ACLR

Considering the methodology described in clause 5.1, Test Tolerance values for OTA ACLR were derived based on values captured in clause 11.3.7.

For FR1:

- For relative ACLR, the TT was agreed to be the same as the MU.
- For absolute ACLR, the TT was agreed to be 0 dB.

For FR2: The TT was agreed to be the same as the MU.

Frequency range specific Test Tolerance values for the OTA ACLR test are defined in tables 11.3.8-1 to 11.3.8-4.

Table 11.3.8-1: Test Tolerance values for the absolute OTA ACLR, Normal test conditions, FR1

	f ≤ 3 GHz	**3 GHz < f ≤ 4.2 GHz**	**4.2 GHz < f ≤ 6 GHz**
Test Tolerance (dB)	0	0	0

Table 11.3.8-2: Test Tolerance values for the relative OTA ACLR, Normal test conditions, FR1

	f ≤ 3 GHz	**3 GHz < f ≤ 4.2 GHz**	**4.2 GHz < f ≤ 6 GHz**
Test Tolerance (dB)	1.0	1.2	1.2

Table 11.3.8-3: Test Tolerance values for the absolute OTA ACLR, Normal test conditions, FR2

	24.25 < f < 29.5 GHz	37 < f < 43.5 GHz	43.5 < f < 48.2 GHz
Test Tolerance (dB)	2.7	2.7	2.9

Table 11.3.8-4: Test Tolerance values for the relative OTA ACLR, Normal test conditions, FR2

	24.25 < f < 29.5 GHz	37 < f < 43.5 GHz	43.5 < f < 48.2 GHz
Test Tolerance (dB)	2.3	2.6	2.8

An overview of the TT values for all the requirements is captured in clause 18.

11.4 OTA SEM and OTA OBUE

11.4.1 General

Clause 11.4 captures MU and TT values derivation for the OTA operating band unwanted emission (OBUE) *TRP requirement*, as well as the OTA spectrum emission mask (SEM) in Normal test conditions.

11.4.2 Indoor Anechoic Chamber

11.4.2.1 Measurement system description

Measurement system description is captured in clause 7.2.1, with the Indoor Anechoic Chamber measurement system setup depicted on figure 7.2.1-1.

NOTE: Whilst the TRP estimation does not require far-field conditions explicitly the MU budget below is based on errors under far-field conditions. If far-field conditions are not met an in-door anechoic chamber may be used but a separate MU analysis is necessary.

11.4.2.2 Test procedure

11.4.2.2.1 Stage 1: Calibration

Calibration procedure for the Indoor Anechoic Chamber is captured in clause 8.2 with the calibration system setup for TX requirements depicted in figure 8.2-1.

Calibration shall be performed individually for each frequency at which unwanted emissions are measured. This may involve calibration measurement or interpolation between calibration points.

11.4.2.2.2 Stage 2: BS measurement

Reference IAC procedure in clause 11.2.2.2.2 (i.e. the same procedure as for OTA BS output power measurement in IAC).

The appropriate parameters in step 4 is the mean power for OBUE or SEM test for each carrier arriving at the measurement equipment connector D (figure 7.2.1-1), denoted by $P_{R\_OBUE,\ D}$ or $P_{R\_SEM,\ D}$, and calculation of $EIRP_e$ using following formulas:

$$EIRP_e = P_{R\_OBUE\_D} + L_{TX\_cal,\ A\rightarrow D}$$

$$EIRP_e = P_{R\_SEM\_D} + L_{TX\_cal,\ A\rightarrow D}$$

11.4.2.3 MU value derivation, FR1

Table 11.4.2.3-1 captures derivation of the expanded measurement uncertainty values for OTA OBUE or OTA SEM measurements in Indoor Anechoic Chamber (Normal test conditions, FR1).

Table 11.4.2.3-1: IAC MU value derivation for OTA OBUE or OTA SEM measurement, FR1

UID	Uncertainty source	Uncertainty value (dB)			Distribution of the probability	Divisor based on distribution shape	c_i	Standard uncertainty u_i (dB)		
		f ≤ 3 GHz	3 < f ≤ 4.2 GHz	4.2 < f ≤ 6 GHz				f ≤ 3 GHz	3 < f ≤ 4.2 GHz	4.2 < f ≤ 6 GHz
Stage 2: BS measurement										
A1-1	Positioning misalignment between the BS and the reference antenna	0.03	0.03	0.03	Rectangular	1.73	1	0.02	0.02	0.02
A1-2	Pointing misalignment between the BS and the receiving antenna	0.30	0.30	0.30	Rectangular	1.73	1	0.17	0.17	0.17
A1-3	Quality of quiet zone	0.10	0.10	0.10	Gaussian	1.00	1	0.10	0.10	0.10
A1-4a	Polarization mismatch between the BS and the receiving antenna	0.01	0.01	0.01	Rectangular	1.73	1	0.01	0.01	0.01
A1-5a	Mutual coupling between the BS and the receiving antenna	0.00	0.00	0.00	Rectangular	1.73	1	0.00	0.00	0.00
A1-6	Phase curvature	0.05	0.05	0.05	Gaussian	1.00	1	0.05	0.05	0.05
C1-1	Uncertainty of the RF power measurement equipment (e.g. spectrum analyzer, power meter)	0.14	0.26	0.26	Gaussian	1.00	1	0.14	0.26	0.26
A1-7	Impedance mismatch in the receiving chain	0.14	0.33	0.33	U-shaped	1.41	1	0.10	0.23	0.23
A1-8	Random uncertainty	0.10	0.10	0.10	Rectangular	1.73	1	0.06	0.06	0.06
Stage 1: Calibration measurement										
A1-9	Impedance mismatch between the receiving antenna and the network analyzer	0.05	0.05	0.05	U-shaped	1.41	1	0.04	0.04	0.04
A1-10	Positioning and pointing misalignment between the reference antenna and the receiving antenna	0.01	0.01	0.01	Rectangular	1.73	1	0.01	0.01	0.01
A1-11	Impedance mismatch between the reference antenna and the network analyzer.	0.05	0.05	0.05	U-shaped	1.41	1	0.04	0.04	0.04
A1-3	Quality of quiet zone	0.10	0.10	0.10	Gaussian	1.00	1	0.10	0.10	0.10
A1-4b	Polarization mismatch between the reference antenna and the receiving antenna	0.01	0.01	0.01	Rectangular	1.73	1	0.01	0.01	0.01
A1-5b	Mutual coupling between the reference antenna and the receiving antenna	0.00	0.00	0.00	Rectangular	1.73	1	0.00	0.00	0.00
A1-6	Phase curvature	0.05	0.05	0.05	Gaussian	1.00	1	0.05	0.05	0.05
C1-3	Uncertainty of the network analyzer	0.13	0.20	0.20	Gaussian	1.00	1	0.13	0.20	0.20
A1-12	Influence of the reference antenna feed cable	0.05	0.05	0.05	Rectangular	1.73	1	0.03	0.03	0.03
A1-13	Reference antenna feed cable loss measurement uncertainty	0.06	0.06	0.06	Gaussian	1.00	1	0.06	0.06	0.06
A1-14	Influence of the receiving antenna feed cable	0.05	0.05	0.05	Rectangular	1.73	1	0.03	0.03	0.03
C1-4	Uncertainty of the absolute gain of the reference antenna	0.50	0.43	0.43	Rectangular	1.73	1	0.29	0.25	0.25
A1-15	Uncertainty of the absolute gain of the receiving antenna	0.00	0.00	0.00	Rectangular	1.73	1	0.00	0.00	0.00

Combined standard uncertainty (1σ) (dB)	**0.44**	**0.54**	**0.54**
Expanded uncertainty (1.96σ - confidence interval of 95 %) (dB)	**0.87**	**1.06**	**1.06**
TRP summation error	**0.75**	**0.75**	**0.75**
Total MU	**1.15**	**1.30**	**1.30**

11.4.3 Compact Antenna Test Range

11.4.3.1 Measurement system description

Measurement system description is captured in clause 7.3.1, with the Compact Antenna Test Range measurement system setup depicted on figure 8.3-1.

11.4.3.2 Test procedure

11.4.3.2.1 Stage 1: Calibration

Calibration should be carried out using the same procedure as in 8.3.

Calibration shall be performed individually for each frequency at which unwanted emissions are measured. This may involve calibration measurement or interpolation between calibration points.

NOTE: This stage may be omitted provided calibration stage has been performed already during BS output power measurement.

11.4.3.2.2 Stage 2: BS measurement

Reference CATR procedure in clause 11.2.3.2.2 (i.e. the same procedure as for OTA BS output power).

The appropriate parameters in step 4 is the mean power for OBUE or SEM test for each carrier arriving at the measurement equipment connector B (figure 7.3.1-1), denoted by $P_{R\_OBUE\_B}$ or $P_{R\_SEM\_B}$, and calculation of $power_e$ is done using following formulas:

$$power_e = P_{R\_OBUE\_B} + L_{TX\_cal,\ A\rightarrow B}$$

$$power_e = P_{R\_SEM\_B} + L_{TX\_cal,\ A\rightarrow B}$$

11.4.3.3 MU value derivation, FR1

Table 11.4.3.3-1 captures derivation of the expanded measurement uncertainty values for OTA OBUE or OTA SEM measurements in CATR (Normal test conditions, FR1).

Table 11.4.3.3-1: CATR MU value derivation for OTA OBUE or OTA SEM measurement, FR1

UID	Uncertainty source	Uncertainty value (dB)			Distribution of the probability	Divisor based on distribution shape	c_i	Standard uncertainty u_i (dB)		
		f ≤ 3 GHz	3 < f ≤ 4.2 GHz	4.2 < f ≤ 6 GHz				f ≤ 3 GHz	3 < f ≤ 4.2 GHz	4.2 < f ≤ 6 GHz
Stage 2: BS measurement										
A2-18a	Misalignment and pointing error of BS (for TRP)	0.30	0.30	0.30	Rectangular	1.73	1	0.17	0.17	0.17
C1-1	Uncertainty of the RF power measurement equipment (e.g. spectrum analyzer, power meter)	0.14	0.26	0.26	Gaussian	1.00	1	0.14	0.26	0.26
A2-2a	Standing wave between BS and test range antenna	0.21	0.21	0.21	U-shaped	1.41	1	0.15	0.15	0.15
A2-3	RF leakage (SGH connector terminated & test range antenna connector cable terminated)	0.00	0.00	0.00	Gaussian	1.00	1	0.00	0.00	0.00
A2-4a	QZ ripple experienced by BS	0.09	0.09	0.09	Gaussian	1.00	1	0.09	0.09	0.09
A2-12	Frequency flatness of test system	0.25	0.25	0.25	Gaussian	1.00	1	0.25	0.25	0.25
Stage 1: Calibration measurement										
C1-3	Uncertainty of the network analyzer	0.13	0.20	0.20	Gaussian	1.00	1	0.13	0.20	0.20
A2-5a	Mismatch of receiver chain between receiving antenna and measurement receiver	0.13	0.33	0.33	U-shaped	1.41	1	0.09	0.23	0.23
A2-6	Insertion loss of receiver chain	0.18	0.18	0.18	Rectangular	1.73	1	0.10	0.10	0.10
A2-3	RF leakage (SGH connector terminated & test range antenna connector cable terminated)	0.00	0.00	0.00	Gaussian	1.00	1	0.00	0.00	0.00
A2-7	Influence of the calibration antenna feed cable	0.02	0.02	0.02	U-shaped	1.41	1	0.02	0.02	0.02
C1-4	Uncertainty of the absolute gain of the reference antenna	0.50	0.43	0.43	Rectangular	1.73	1	0.29	0.25	0.25
A2-8	Misalignment positioning system	0.00	0.00	0.00	Exp. normal	2.00	1	0.00	0.00	0.00
A2-1b	Misalignment and pointing error of calibration antenna (for EIRP)	0.50	0.50	0.50	Exp. normal	2.00	1	0.25	0.25	0.25
A2-9	Rotary joints	0.05	0.05	0.05	U-shaped	1.41	1	0.03	0.03	0.03
A2-2b	Standing wave between calibration antenna and test range antenna	0.09	0.09	0.09	U-shaped	1.41	1	0.06	0.06	0.06
A2-4b	QZ ripple experienced by calibration antenna	0.01	0.01	0.01	Gaussian	1.00	1	0.01	0.01	0.01
A2-11	Switching uncertainty	0.26	0.26	0.26	Rectangular	1.73	1	0.15	0.15	0.15
Combined standard uncertainty (1σ) (dB)								**0.59**	**0.67**	**0.67**
Expanded uncertainty (1.96σ - confidence interval of 95 %) (dB)								**1.16**	**1.31**	**1.31**
TRP summation error								**0.75**	**0.75**	**0.75**
Total MU								**1.39**	**1.51**	**1.51**

11.4.3.4 MU value derivation, FR2

A CATR MU budget was assessed in order to determine acceptable MU for the EIRP accuracy measurement in FR2. The CATR test setup and calibration and measurement procedures for FR2 are expected to be similar to those of FR1,

although the test chamber dimensions and associated MU values will scale due to the shorter wavelengths and larger relative array apertures. However, it is noted that in order to achieve the test instrument uncertainties that were assumed, calibration of the spectrum analyzer may be needed.

Table 11.4.3.4-1 captures derivation of the expanded measurement uncertainty values for OTA OBUE measurements in CATR (Normal test conditions, FR2).

Table 11.4.3.4-1: CATR MU value derivation for OTA OBUE measurement, FR2

UID	Uncertainty source	Uncertainty value (dB)		Distribution of the probability	Divisor based on distribution shape	c_i	Standard uncertainty u_i (dB)	
		24.25 < f ≤ 29.5 GHz	37 < f ≤ 43.5 GHz				24.25 < f ≤ 29.5 GHz	37 < f ≤ 43.5 GHz
Stage 2: BS measurement								
A2-18a	Misalignment and pointing error of BS (for TRP)	0.30	0.30	Exp. normal	2.00	1	0.15	0.15
C1-7	Uncertainty of the RF power measurement equipment (e.g. spectrum analyzer, power meter) - low power (UEM, absolute ACLR)	0.90	0.90	Gaussian	1.00	1	0.90	0.90
A2-2a	Standing wave between BS and test range antenna	0.03	0.03	U-shaped	1.41	1	0.02	0.02
A2-3	RF leakage (SGH connector terminated & test range antenna connector cable terminated)	0.01	0.01	Gaussian	1.00	1	0.01	0.01
A2-4a	QZ ripple experienced by BS	0.40	0.40	Gaussian	1.00	1	0.40	0.40
A2-12	Frequency flatness of test system	0.25	0.25	Gaussian	1.00	1	0.25	0.25
Stage 1: Calibration measurement								
C1-3	Uncertainty of the Network Analyzer	0.30	0.30	Gaussian	1.00	1	0.30	0.30
A2-5b	Mismatch of receiver chain for low power receiver	0.72	0.72	U-shaped	1.41	1	0.51	0.51
A2-6	Insertion loss in receiver chain	0.00	0.00	Rectangular	1.73	1	0.00	0.00
A2-3	RF leakage (SGH connector terminated & test range antenna connector cable terminated)	0.01	0.01	Gaussian	1.00	1	0.01	0.01
A2-7	Influence of the calibration antenna feed cable	0.21	0.29	U-shaped	1.41	1	0.15	0.21
C1-4	Uncertainty of the absolute gain of the reference antenna	0.52	0.52	Rectangular	1.73	1	0.30	0.30
A2-8	Misalignment positioning system	0.00	0.00	Exp. normal	2.00	1	0.00	0.00
A2-1b	Misalignment and pointing error of calibration antenna (for EIRP)	0.00	0.00	Exp. normal	2.00	1	0.00	0.00
A2-9	Rotary joints	0.00	0.00	U-shaped	1.41	1	0.00	0.00
A2-2b	Standing wave between calibration antenna and test range antenna	0.09	0.09	U-shaped	1.41	1	0.06	0.06
A2-4b	QZ ripple experienced by calibration antenna	0.01	0.01	Gaussian	1.00	1	0.01	0.01
A2-11	Switching uncertainty	0.10	0.10	Rectangular	1.73	1	0.06	0.06
Combined standard uncertainty (1σ) (dB)							**1.23**	**1.24**
Expanded uncertainty (1.96σ - confidence interval of 95 %) (dB)							**2.42**	**2.44**
TRP summation error							**1.20**	**1.20**
Total MU							**2.70**	**2.72**

11.4.4 Near Field Test Range

11.4.4.1 Measurement system description

Measurement system description is captured in clause 7.5.1.

In case of OTA OBUE measurement, NF to FF transform is not needed since TRP is computed based on power density measured in Near Field by sampling properly the power density for OBUE or SEM.

11.4.4.2 Test procedure

11.4.4.2.1 Stage 1: Calibration

Calibration procedure for the Near Field Test Range is captured in clause 8.5.

11.4.4.2.2 Stage 2: BS measurement

Refer to clause 11.2.4.2.2 (i.e. same procedure as for OTA BS output power in the NFTR). The measured power in step 3 is the power density for OBUE or SEM test for each carrier arriving at the measurement equipment connector.

11.4.4.3 MU value derivation, FR1

Refer to clause 11.2.4.3 (i.e. the MU value derivation for the OTA BS output power measurement in NFTR) for MU value per point measurement.

11.4.5 Reverberation Chamber

11.4.5.1 Measurement system description

Measurement system description is captured in clause 7.7.1.

11.4.5.2 Test procedure

11.4.5.2.1 Stage 1: Calibration

Calibration procedure for the Reverberation chamber is captured in clause 8.7.

11.4.5.2.2 Stage 2: BS measurement

The RC test procedure is described in clause 11.2.5.2.2 (i.e. the same procedure as for the OTA BS output power).

11.4.5.3 MU value derivation, FR1

Table 11.4.5.3-1 captures derivation of the expanded measurement uncertainty values for OTA OBUE or OTA SEM measurement in Reverberation chamber (Normal test conditions, FR1).

Table 11.4.5.3-1: Reverberation chamber MU value derivation for OTA OBUE or OTA SEM measurement, FR1

UID	Uncertainty source	Uncertainty value (dB)			Distribution of the probability	Divisor based on distribution shape	c_i	Standard uncertainty u_i (dB)		
		f ≤ 3 GHz	3 < f ≤ 4.2 GHz	4.2 < f ≤ 6 GHz				f ≤ 3 GHz	3 < f ≤ 4.2 GHz	4.2 < f ≤ 6 GHz
Stage 2: BS measurement										
C1-1	Uncertainty of the RF power measurement equipment (e.g. spectrum analyzer, power meter)	0.14	0.26	0.26	Gaussian	1.00	1	0.14	0.26	0.26
A6-1	Impedance mismatch in the receiving chain	0.20	0.20	0.20	U-shaped	1.41	1	0.14	0.14	0.14
A6-2	Random uncertainty	0.10	0.10	0.10	Rectangular	1.73	1	0.06	0.06	0.06
Stage 1: Calibration measurement										
A6-3	Reference antenna radiation efficiency	0.20	0.20	0.20	Gaussian	1.00	1	0.20	0.20	0.20
A6-4	Mean value estimation of reference antenna mismatch efficiency	0.15	0.15	0.15	Gaussian	1.00	1	0.15	0.15	0.15
C1-3	Uncertainty of the network analyzer	0.20	0.20	0.20	Gaussian	1.00	1	0.20	0.20	0.20
A6-5	Influence of the reference antenna feed cable	0.20	0.20	0.20	Gaussian	1.00	1	0.20	0.20	0.20
A6-6	Mean value estimation of transfer function	0.27	0.27	0.27	Gaussian	1.00	1	0.27	0.27	0.27
A6-7	Uniformity of transfer function	0.50	0.50	0.50	Gaussian	1.00	1	0.50	0.50	0.50
Combined standard uncertainty (1σ) (dB)								**0.71**	**0.75**	**0.75**
Expanded uncertainty (1.96σ - confidence interval of 95 %) (dB)								**1.40**	**1.46**	**1.46**

11.4.5.4 MU value derivation, FR2

Table 11.4.5.4-1 captures derivation of the expanded measurement uncertainty values for OTA OBUE measurements in Reverberation chamber (Normal test conditions, FR2).

Table 11.4.5.4-1: Reverberation chamber MU value derivation for OTA OBUE measurement, FR2

UID	Uncertainty source	Uncertainty value (dB)		Distribution of the probability	Divisor based on distribution shape	c_i	Standard uncertainty u_i (dB)	
		24.25 < f ≤ 29.5 GHz	37 < f ≤ 43.5 GHz				24.25 < f ≤ 29.5 GHz	37 < f ≤ 43.5 GHz
Stage 2: BS measurement								
C1-7	Uncertainty of the RF power measurement equipment (e.g. spectrum analyzer, power meter) - low power (UEM, absolute ACLR)	0.90	0.90	Gaussian	1.00	1	0.90	0.90
A6-1	Impedance mismatch in the receiving chain	0.20	0.20	U-shaped	1.41	1	0.14	0.14
A6-2	Random uncertainty	0.10	0.10	Rectangular	1.73	1	0.06	0.06
Stage 1: Calibration measurement								
A6-3	Reference antenna radiation efficiency	0.30	0.30	Gaussian	1.00	1	0.30	0.30
A6-4	Mean value estimation of reference antenna mismatch efficiency	0.27	0.27	Gaussian	1.00	1	0.27	0.27
C1-3	Uncertainty of the network analyzer	0.30	0.30	Gaussian	1.00	0.3	0.30	0.30
A6-5	Influence of the reference antenna feed cable	0.20	0.20	Gaussian	1.00	1	0.20	0.20
A6-6	Mean value estimation of transfer function	0.27	0.27	Gaussian	1.00	1	0.27	0.27
A6-7	Uniformity of transfer function	0.50	0.50	Gaussian	1.00	1	0.50	0.50
Combined standard uncertainty (1σ) (dB)							**1.20**	**1.20**
Expanded uncertainty (1.96σ - confidence interval of 95 %) (dB)							**2.36**	**2.36**

11.4.6 Plane Wave Synthesizer

11.4.6.1 Measurement system description

Measurement system description is captured in clause 7.6.1.

11.4.6.2 Test procedure

11.4.6.2.1 Stage 1: Calibration

Calibration procedure for the Plane Wave Synthesizer is captured in clause 8.6.

NOTE: This stage may be omitted provided calibration stage has been performed already during OTA BS output power measurement.

Calibration shall be performed individually for each frequency at which unwanted emissions are measured. This may involve calibration measurement or interpolation between calibration points.

11.4.6.2.2 Stage 2: BS measurement

Reference PWS procedure in clause 11.2.6.2.2 (i.e. the same procedure as for OTA BS output power in PWS).

The appropriate parameters in step 3 is the mean power for OBUE or SEM test for each carrier arriving at the measurement equipment connector C (figure 7.6.1-1), denoted by $P_{R\_OBUE,\ C}$ or $P_{R\_SEM,\ C}$, and calculation of $EIRP_e$ is done using following formulas:

$$EIRP_e = P_{R\_OBUE\_C} + L$$

$$EIRP_e = P_{R\_SEM\_C} + L$$

11.4.6.3 MU value derivation, FR1

The MU value for OTA OBUE or OTA SEM in PWS is the same as in clause 11.2.6.3 (i.e. OTA BS output power MU in PWS).

11.4.7 Maximum accepted test system uncertainty

For the frequency range up to 4.2 GHz, the same MU values as for E-UTRA were adopted. It is expected that the test chamber setup, calibration and measurement procedures for E-UTRA and NR will be highly similar. All uncertainty factors were judged to be the same.

For the frequency range 4.2 - 6 GHz, all MU factors, including instrumentation related MU were judged to be the same as for the 3 - 4.2 GHz range, and thus the total MU for 4.2 – 6 GHz is the same as for 3 - 4.2 GHz. This assessment was made under the assumption of testing BS designed for licensed spectrum; for unlicensed spectrum the MU may differ.

Maximum test system uncertainties derivation methodology was described in clause 5.1. The maximum accepted test system uncertainty values was derived based on test system specific values.

According to the methodology referred above, the common maximum accepted test system uncertainty values for OTA OBUE or OTA SEM test can be derived from values captured in tables 11.4.7-1 and 11.4.7-2, derived based on the expanded uncertainty u_e (1.96σ - confidence interval of 95 %) values. The common maximum accepted test system uncertainty values are applicable for all test methods addressing OTA OBUE or OTA SEM test requirement.

Table 11.4.7-1: Test system specific MU values for the OTA OBUE or OTA SEM measurement, FR1

	Expanded uncertainty u_e (dB)		
	f ≤ 3 GHz	**3 GHz < f ≤ 4.2 GHz**	**4.2 GHz < f ≤ 6 GHz**
Indoor Anechoic Chamber	1.15	1.30	1.30
Compact Antenna Test Range	1.39	1.51	1.51
Near Field Test Range	1.26	1.33	1.33
Plane Wave Synthesizer	1.24	1.40	1.49
Reverberation Chamber	1.40	1.46	1.46
Common maximum accepted test system uncertainty	**1.8**	**2.0**	**2.0**

Table 11.4.7-2: Test system specific MU values for the OTA OBUE measurement, FR2

	Expanded uncertainty u_e (dB)		
	24.25 < f < 29.5 GHz	**37 < f < 43.5 GHz**	**43.5 < f < 48.2 GHz**
Indoor Anechoic Chamber	-	-	-
Compact Antenna Test Range	2.70	2.72	-
Near Field Test Range	-	-	-
Reverberation Chamber	2.36	2.36	-
Plane Wave Synthesizer	-	-	-
Common maximum accepted test system uncertainty	**2.7**	**2.7**	**2.9**

The MU value was agreed to be 1.4 dB for up to 3 GHz bands and 1.5 dB for 3 – 6 GHz bands. The MU in 4.2-6 GHz is valid for BS designed to operate in licensed spectrum.

For CATR the expanded MU is established as a root sum square combining of the dB values for the MU and the SE (see clause 6.3.6), the MU was decided to be 2.7 dB for the frequency range 24.25 < f < 29.5 GHz and 2.7 dB for the frequency range 37 < f < 43.5 GHz.

An overview of the MU values for all the requirements is captured in clause 17.

11.4.8 Test Tolerance for OTA OBUE and OTA SEM

Considering the methodology described in clause 5.1, Test Tolerance values for OTA OBUE and OTA SEM were derived based on values captured in clause 11.4.7.

NOTE: For OTA SEM, TT values up to 4.2 GHz apply.

FR1: The TT value was agreed to be the same as the MU value for 0 - 10 MHz from the carrier and 0 dB for >10 MHz from the carrier.

FR2: The TT value was agreed to be the same as the MU (i.e. 2.7 dB) for 0 - 10% of the BS channel bandwidth away from the carrier, and 0 dB for >10% of BS channel bandwidth from the carrier.

Frequency range specific Test Tolerance values for the OTA OBUE and OTA SEM test in FR1 are defined in table 11.4.8-1.

Frequency range specific Test Tolerance values for the OTA OBUE test in FR2 are defined in table 11.4.8-2.

Table 11.4.8-1: Test Tolerance values for the OTA OBUE and OTA SEM, Normal test conditions, FR1

	f ≤ 3 GHz	**3 GHz < f ≤ 4.2 GHz**	**4.2 GHz < f ≤ 6 GHz**
Test Tolerance (dB)	1.8	2.0	2.0

.

Table 11.4.8-2: Test Tolerance values for the OTA OBUE, Normal test conditions, FR2

	24.25 < f < 29.5 GHz	**37 < f < 43.5 GHz**	**43.5 < f < 48.2 GHz**
Test Tolerance (dB)	2.7	2.7	2.9

An overview of the TT values for all the requirements is captured in clause 18.

12 Out-of-band TRP requirements

12.1 General

The TRP MU consists of an MU per-point and a *TRP summation error* (SE) which allows for errors in the calculation of the TRP from multiple directional power measurements and allows for a sparse grid to be used to reduce measurement time. The total MU is calculated as follows:

$$MU_{total} = \sqrt{MU_{perpo\,\mathrm{int}}^{2} + SE^{2}}$$

Refer to clause 6.3.6 for the SE value derivation.

12.2 Transmitter mandatory spurious emissions

12.2.1 General

Clause 12.2 captures MU and TT values derivation for the TX mandatory spurious emissions *TRP requirement* in Normal test conditions.

The conducted spurious emission requirement MU is split up into a number of frequency ranges as in table 12.2.1-1.

Table 12.2.1-1: MU values for conducted spurious emission requirement

Transmitter spurious emissions, mandatory requirements	**MU (dB)**
30 MHz ≤ f ≤ 4 GHz	2.0
4 GHz < f ≤ 19 GHz	4.0

The conducted analysis based on UTRA/E-UTRA frequencies which were all below 4.2 GHz (at the time), the break point in the MU is hence somewhat related to the in-band and out-of-band MU analysis. As in-band MU analysis is now being done up to 6 GHz (for the LAA and NR bands) it is sensible to change the frequency break point to 6 GHz.

The spurious emission requirements cover a large frequency range from 30 MHz to 26 GHz, many of the chambers chosen for analysis cannot cover this entire range. The MU analysis is therefore based on a general chamber analysis rather than any specific method. Other chambers may of course be used as long as the MU is within the specified value (or the test requirement is offset appropriately) and they are suitable for the frequencies being tested.

The spurious emissions requirements of the *BS type 2-O* are between 30 MHz to the 2nd harmonic of the DL operating band. Currently the upper frequency limit calculated MU is 60 GHz.

This range can be split into a number of regions:

30 MHz < f ≤ 6 GHz

This region also exists in FR1, the same MU is assumed for FR2 and for FR1.

6 GHz < f ≤ 18 GHz

This is also an FR1 region however the MU values assumed in FR1 is larger than the in-band MU for FR2 which is at a higher frequency. An FR2 BS will likely be smaller than an FR1 BS and hence the chamber can be smaller and the requirements on the quiet zone can be relaxed. In addition, the test equipment is suitable for much higher frequencies (FR2 in band is above the frequency range) implying a low uncertainty. The MU in the region therefore is assumed to be the same as the FR2 in-band MU.

18 GHz < f ≤ 43.5 GHz

This frequency range covers the FR2 in-band region. The in-band MU budget is found in clause 11.2.5.4.

43.5 GHz < f ≤ 60 GHz

This frequency range is above the in-band region, the measured frequencies are above the measurement frequency of the test equipment and hence a mixer is used to down convert the measured frequency to within the range of the test equipment.

It is not necessary to measure TRP in the far field as a large enough range may be impractical for the frequency range being considered.

12.2.2 General chamber

12.2.2.1 Measurement system description

As the BS antenna radiating dimensions are fixed then the far field distance increases ($FF \approx 2d^2/\lambda$). At 12.75 GHz the far field distance for a 1.5 m BS *antenna array* is almost 200 m, this is clearly impractical in an indoor chamber (and the path loss would also make measurement difficult), so spurious emission testing will not always be in the far field. This is acceptable as the requirement is TRP and hence it is not necessary to measure in the far field however it needs to be considered when looking at MU.

Considerations of the large frequency range must also be considered, including the chamber performance (quiet zone), the calibration effectiveness and the available reference and test antennas over the frequency range.

Measurement system description is captured in clause 7.7.1.

12.2.2.2 Test procedure

12.2.2.2.1 Stage 1: Calibration

Calibration procedure for the general chamber is captured in clause 8.7.

NOTE: The calibration for the out-of-band measurements should be repeated for each frequency being tested and each test antenna.

12.2.2.2.2 Stage 2: BS measurement

The general chamber testing procedure consists of the following steps:

1) Place the BS at the positioner.

2) Align the manufacturer declared coordinate system orientation of the BS with the test system.

3) Measurements shall use appropriate measurement bandwidth.

4) The measurement device characteristics shall be: Detection mode: True RMS.

5) Set the BS to transmit according to the applicable test configuration

6) Align the BS and the test antenna such that measurements to determine TRP can be performed (see clause 6.3.3 for the TRP measurement procedures).

7) Measure the emission at the specified frequencies with specified measurement bandwidth.

8) Repeat step 6 - 7 for all directions in the appropriated TRP measurement grid needed for full TRP estimation (see clause 6.3.3 for the TRP measurement procedures) and for frequency points to be tested.

NOTE 1: The TRP measurement grid may not be the same for all measurement frequencies.

NOTE 2: The frequency sweep or the TRP measurement grid sweep may be done in any order.

9) Calculate TRP at each specified frequency using the directional measurements.

12.2.2.3 MU value derivation, FR1

For FR1 a general directional chamber and reverberation chamber was analysed for the MU derivation. Table 12.2.2.3-1 captures derivation of the expanded measurement uncertainty values for OTA TX spurious emissions measurements in general directional chamber (Normal test conditions, FR1).

Table 12.2.2.3-1: General directional chamber MU value derivation for the TX spurious emissions, FR1

UID	Uncertainty source	Uncertainty value (dB)			Distribution of the probability	Divisor based on distribution shape	c_i	Standard uncertainty u_i (dB)		
		30 MHz< f ≤ 6 GHz	6 GHz< f ≤ 19 GHz	19 GHz< f ≤ 26 GHz				30 MHz< f ≤ 6 GHz	6 GHz< f ≤ 19 GHz	19 GHz< f ≤ 26 GHz
Stage 2: BS measurement										
A5-1	Positioning misalignment between the BS and the reference antenna	0.03	0.03	0.03	Rectangular	1.73	1	0.02	0.02	0.02
A5-2	Pointing misalignment between the BS and the receiving antenna	0.00	0.00	0.00	Rectangular	1.73	1	0.00	0.00	0.00
A5-3	Quality of quiet zone	0.10	0.10	0.10	Gaussian	1.00	1	0.10	0.10	0.10
A5-4a	Polarization mismatch between the BS and the receiving antenna	0.01	0.01	0.01	Rectangular	1.73	1	0.01	0.01	0.01
A5-5a	Mutual coupling between the BS and the receiving antenna	0.00	0.00	0.00	Rectangular	1.73	1	0.00	0.00	0.00
A5-6a	Phase curvature across the BS antenna	0.05	0.05	0.05	Gaussian	1.00	1	0.05	0.05	0.05
C3-3	Transmitter mandatory spurious emissions - Conducted Uncertainty (minus miss match)	1.00	2.00	2.00	Gaussian	1.00	1	1.00	2.00	2.00
A5-7	Impedance mismatch in the receiving chain	0.20	0.45	0.45	U-shaped	1.41	1	0.14	0.32	0.32
A5-8	Random uncertainty	0.10	0.10	0.10	Rectangular	1.73	1	0.06	0.06	0.06
A5-17	Measurement antenna frequency variation	0.10	0.10	0.10	Rectangular	1.73	1	0.06	0.06	0.06
A5-18	FSPL estimation error	0.00	0.00	0.00	Gaussian	1.00	1	0.00	0.00	0.00
A5-16	Frequency flatness of test system	0.25	0.25	0.25	Gaussian	1.00	1	0.25	0.25	0.25
Stage 1: Calibration measurement										
A5-9	Impedance mismatch between the receiving antenna and the network analyzer	0.05	0.05	0.05	U-shaped	1.41	1	0.04	0.04	0.04
A5-10	Positioning and pointing misalignment between the reference antenna and the receiving antenna	0.01	0.01	0.01	Rectangular	1.73	1	0.01	0.01	0.01

A5-11	Impedance mismatch between the reference antenna and the network analyzer.	0.05	0.05	0.05	U-shaped	1.41	1	0.04	0.04	0.04
A5-3	Quality of quiet zone	0.10	0.10	0.10	Gaussian	1.00	1	0.10	0.10	0.10
A5-4b	Polarization mismatch between the reference antenna and the receiving antenna	0.01	0.01	0.01	Rectangular	1.73	1	0.01	0.01	0.01
A5-5b	Mutual coupling between the reference antenna and the receiving antenna	0.00	0.00	0.00	Rectangular	1.73	1	0.00	0.00	0.00
A5-6b	Phase curvature across the reference antenna	0.05	0.05	0.05	Gaussian	1.00	1	0.05	0.05	0.05
C1-3	Uncertainty of the network analyzer	0.13	0.20	0.20	Gaussian	1.00	1	0.13	0.20	0.20
A5-12	Influence of the reference antenna feed cable	0.05	0.05	0.05	Rectangular	1.73	1	0.03	0.03	0.03
A5-13	Reference antenna feed cable loss measurement uncertainty	0.06	0.06	0.06	Gaussian	1.00	1	0.06	0.06	0.06
A5-14	Influence of the receiving antenna feed cable	0.05	0.05	0.05	Rectangular	1.73	1	0.03	0.03	0.03
C1-4	Uncertainty of the absolute gain of the reference antenna	0.50	0.43	0.43	Rectangular	1.73	1	0.29	0.25	0.25
A5-15	Uncertainty of the absolute gain of the receiving antenna	0.00	0.00	0.00	Rectangular	1.73	1	0.00	0.00	0.00
Combined standard uncertainty (1σ) (dB)								**1.11**	**2.08**	**2.08**
Expanded uncertainty (1.96σ - confidence interval of 95 %) (dB)								**2.17**	**4.07**	**4.07**
TRP summation error								**0.75**	**0.75**	**0.75**
Total MU								**2.29**	**4.14**	**4.14**

12.2.2.4 MU value derivation, FR2

As opposed to FR1, for FR2 the IAC, CATR and reverberation chamber were analysed separately for the MU value derivation. Table 12.2.2.4-1 captures derivation of the expanded measurement uncertainty values for OTA TX spurious emissions measurements in IAC (Normal test conditions, FR2).

Up to 43.5 GHz the OBUE MU values are assumed.

Table 12.2.2.4-1: IAC MU value derivation for TX spurious emissions, FR2

UID	Uncertainty source	Uncertainty value (dB)	Distribution of the probability	Divisor based on distribution shape	c_i	Standard uncertainty u_i (dB)
		43.5 GHz< f ≤ 60 GHz				43.5 GHz< f ≤ 60 GHz
Stage 2: BS measurement						
A1-1	Positioning misalignment between the BS and the reference antenna	0.02	Rectangular	1.73	1	0.01
A1-2	Pointing misalignment between the BS and the receiving antenna	0.00	Rectangular	1.73	1	0.00
A1-3	Quality of quiet zone	0.10	Gaussian	1.00	1	0.10
A1-4a	Polarization mismatch between the BS and the receiving antenna	0.02	Rectangular	1.73	1	0.01
A1-5a	Mutual coupling between the BS and the receiving antenna	0.00	Rectangular	1.73	1	0.00
A1-6	Phase curvature	0.05	Gaussian	1.00	1	0.05
C1-7	Uncertainty of the RF power measurement equipment (e.g. spectrum analyzer, power meter) - low power (UEM, absolute ACLR)	0.60	Gaussian	1.00	1	0.60
A1-16	Frequency flatness of test system	0.25	Gaussian	1.00	1	0.25
A1-21	Uncertainty of the LNA (FR2 only)	0.00	Gaussian	1.00	1	0.00
A1-22	Uncertainty of the mixer (FR2 only)	2.25	Gaussian	1.00	1	2.25
A1-7	Impedance mismatch in the receiving chain	0.42	U-shaped	1.41	1	0.30
A1-8	Random uncertainty	0.10	Rectangular	1.73	1	0.06
Stage 1: Calibration measurement						
A1-9	Impedance mismatch between the receiving antenna and the network analyzer	0.57	U-shaped	1.41	1	0.40
A1-10	Positioning and pointing misalignment between the reference antenna and the receiving antenna	0.43	Rectangular	1.73	1	0.25
A1-11	Impedance mismatch between the reference antenna and the network analyzer.	0.57	U-shaped	1.41	1	0.40
A1-3	Quality of quiet zone	0.10	Gaussian	1.00	1	0.10
A1-4b	Polarization mismatch between the reference antenna and the receiving antenna	0.02	Rectangular	1.73	1	0.01
A1-5b	Mutual coupling between the reference antenna and the receiving antenna	0.00	Rectangular	1.73	1	0.00
A1-6	Phase curvature	0.07	Gaussian	1.00	1	0.07
C1-3	Uncertainty of the network analyzer	0.30	Gaussian	1.00	1	0.30
A1-12	Influence of the reference antenna feed cable	0.18	Rectangular	1.73	1	0.10
A1-13	Reference antenna feed cable loss measurement uncertainty	0.10	Gaussian	1.00	1	0.10
A1-14	Influence of the receiving antenna feed cable	0.18	Rectangular	1.73	1	0.10
C1-4	Uncertainty of the absolute gain of the reference antenna	0.52	Rectangular	1.73	1	0.30
A1-15	Uncertainty of the absolute gain of the receiving antenna	0.00	Rectangular	1.73	1	0.00
Combined standard uncertainty (1σ) (dB)						**2.49**
Expanded uncertainty (1.96σ - confidence interval of 95 %) (dB)						**4.88**
TRP summation error						**0.75**
Total MU						**4.94**

12.2.3 Compact Antenna Test Range

12.2.3.1 Measurement system description

12.2.3.2 Test procedure

12.2.3.2.1 Stage 1: Calibration

Calibration procedure for the Compact Antenna Test Range is captured in clause 8.3.

12.2.3.2.2 Stage 2: BS measurement

Reference CATR procedure in clause 11.2.3.2.2 (i.e. OTA BS output power in CATR).

The appropriate parameters in step 4 is the mean power of spurious emissions test over the measurement BW described in the test requirement.

12.2.3.3 MU value derivation, FR2

Table 12.2.3.3-1 captures derivation of the expanded measurement uncertainty values for OTA TX spurious emissions measurements in CATR (Normal test conditions, FR2).

Table 12.2.3.3-1: CATR value derivation for TX spurious emissions, FR2

UID	Uncertainty source	Uncertainty value (dB)	Distribution of the probability	Divisor based on distribution shape	c_i	Standard uncertainty u_i (dB)
		43.5 GHz< f ≤ 60 GHz				43.5 GHz< f ≤ 60 GHz
Stage 2: BS measurement						
A2-18a	Misalignment and pointing error of BS (for TRP)	0.30	Exp. normal	2.00	1	0.15
C1-7	Uncertainty of the RF power measurement equipment (e.g. spectrum analyzer, power meter) - low power (UEM, absolute ACLR)	0.60	Gaussian	1.00	1	0.60
A2-19	Uncertainty of the LNA (FR2 only)	0.00	Gaussian	1.00	1	0.00
A2-20	Uncertainty of the mixer (FR2 only)	2.25	Gaussian	1.00	1	2.25
A2-2a	Standing wave between BS and test range antenna	0.21	Gaussian	1.00	1	0.21
A2-3	RF leakage (SGH connector terminated & test range antenna connector cable terminated)	0.00	Gaussian	1.00	1	0.00
A2-4a	QZ ripple experienced by BS	0.09	Gaussian	1.00	1	0.09
A2-12	Frequency flatness of test system	0.25	Gaussian	1.00	1	0.25
A2-10	Miscellaneous uncertainty	0.00	Rectangular	1.73	1	0.00
Stage 1: Calibration measurement						
C1-3	Uncertainty of the network analyzer	0.30	Gaussian	1.00	1	0.30
A2-5a	Mismatch of receiver chain between receiving antenna and measurement receiver	0.57	U-shaped	1.41	1	0.40
A2-5b	Mismatch of receiver chain for low power receiver	0.00	U-shaped	1.41	1	0.00
A2-6	Insertion loss of receiver chain	0.18	Rectangular	1.73	1	0.10
A2-3	RF leakage (SGH connector terminated & test range antenna connector cable terminated)	0.00	Gaussian	1.00	1	0.00
A2-7	Influence of the calibration antenna feed cable	0.29	U-shaped	1.41	1	0.21
C1-4	Uncertainty of the absolute gain of the reference antenna	0.52	Rectangular	1.73	1	0.30
A2-8	Misalignment positioning system	0.00	Exp. normal	2.00	1	0.00
A2-1b	Misalignment and pointing error of calibration antenna (for EIRP)	0.00	Exp. normal	2.00	1	0.00
A2-9	Rotary joints	0.00	U-shaped	1.41	1	0.00
A2-2b	Standing wave between calibration antenna and test range antenna	0.09	U-shaped	1.41	1	0.06
A2-4b	QZ ripple experienced by calibration antenna	0.01	Gaussian	1.00	1	0.01
A2-11	Switching uncertainty	0.43	Rectangular	1.73	1	0.25
Combined standard uncertainty (1σ) (dB)						**2.45**
Expanded uncertainty (1.96σ - confidence interval of 95 %) (dB)						**4.81**
TRP summation error						**1.20**
Total MU						**4.96**

12.2.4 Reverberation chamber

12.2.4.1 Measurement system description

Measurement system description is captured in clause 7.7.1.

12.2.4.2 Test procedure

12.2.4.2.1 Stage 1: Calibration

Calibration procedure for the Reverberation chamber is captured in clause 8.7.

NOTE: The calibration for the out-of-band measurements should be repeated for each frequency being tested and each test antenna.

12.2.4.2.2 Stage 2: BS measurement

TRP measurement procedure for the Reverberation chamber is captured in clause 11.2.5.2.2 (i.e. OTA BS output power).

12.2.4.3 MU value derivation

Table 12.2.3.4-1 captures derivation of the expanded measurement uncertainty values for OTA TX spurious emissions measurements in Reverberation Chamber (Normal test conditions).

Table 12.2.4.3-1: Reverberation Chamber value derivation for TX spurious emissions, 380 MHz – 26 GHz

UID	Uncertainty source	Uncertainty value (dB)					Distribution of the probability	Divisor based on distribution shape	c_i	Standard uncertainty u_i (dB)				
		380 MHz < f ≤ 3 GHz	3 < f ≤ 6 GHz	6 < f ≤ 12.75 GHz	12.75 < f ≤ 19 GHz	19 < f ≤ 26 GHz				380 MHz < f ≤ 3 GHz	3 < f ≤ 6 GHz	6 < f ≤ 12.75 GHz	12.75 < f ≤ 19 GHz	19 < f ≤ 26 GHz
Stage 2: BS measurement														
C1-1	Uncertainty of the RF power measurement equipment (e.g. spectrum analyzer, power meter)	0.14	0.26	0.26	0.37	0.37	Gaussian	1.00	1.00	0.14	0.26	0.26	0.37	0.37
A6-1	Impedance mismatch in the receiving chain	0.20	0.20	0.45	0.45	0.45	U-shaped	1.41	1.00	0.14	0.14	0.32	0.32	0.32
A6-2	Random uncertainty	0.10	0.10	0.10	0.1	0.10	Rectangular	1.73	1.00	0.06	0.06	0.06	0.06	0.06
Stage 1: Calibration measurement														
A6-3	Reference antenna radiation efficiency	0.50	0.50	0.50	0.5	0.50	Gaussian	1.00	1.00	0.50	0.5	0.5	0.5	0.5
A6-4	Mean value estimation of reference antenna mismatch efficiency	0.27	0.27	0.27	0.27	0.27	Gaussian	1.00	1.00	0.27	0.27	0.27	0.27	0.27
C1-3	Uncertainty of the network analyzer	0.13	0.20	0.20	0.2	0.20	Gaussian	1.00	1.00	0.13	0.2	0.2	0.2	0.2
A6-5	Influence of the reference antenna feed cable	0.20	0.20	0.20	0.2	0.20	Gaussian	1.00	1.00	0.20	0.2	0.2	0.2	0.2
A6-6	Mean value estimation of transfer function	0.27	0.27	0.27	0.27	0.27	Gaussian	1.00	1.00	0.27	0.27	0.27	0.27	0.27
A6-7	Uniformity of transfer function	1.50	1.50	1.50	1.5	1.50	Gaussian	1.00	1.00	1.50	1.5	1.5	1.5	1.5
Combined standard uncertainty (1σ) (dB)										**1.66**	**1.68**	**1.70**	**1.72**	**1.72**
Expanded uncertainty (1.96σ - confidence interval of 95 %) (dB)										**3.25**	**3.29**	**3.34**	**3.38**	**3.38**

Table 12.2.4.3-2: Reverberation Chamber value derivation for TX spurious emissions, 18 GHz – 60 GHz

UID	Uncertainty source	Uncertainty value (dB)	Distribution of the probability	Divisor based on distribution shape	c_i	Standard uncertainty u_i (dB)
		43.5 GHz< f ≤ 60 GHz				43.5 GHz< f ≤ 60 GHz
Stage 2: BS measurement						
C1-7	Uncertainty of the RF power measurement equipment (e.g. spectrum analyzer, power meter) - low power (UEM, absolute ACLR)	0.60	Gaussian	1.00	1	0.60
A6-1	Impedance mismatch in the receiving chain	0.45	U-shaped	1.41	1	0.32
A6-2	Random uncertainty	0.10	Rectangular	1.73	1	0.06
Stage 1: Calibration measurement						
A6-3	Reference antenna radiation efficiency	0.50	Normal	1.00	1	0.50
A6-4	Mean value estimation of reference antenna mismatch efficiency	0.27	Normal	1.00	1	0.27
C1-3	Uncertainty of the network analyzer	0.30	Gaussian	1.00	1	0.30
A6-5	Influence of the reference antenna feed cable	0.20	Normal	1.00	1	0.20
A6-6	Mean value estimation of transfer function	0.27	Normal	1.00	1	0.27
A6-7	Uniformity of transfer function	1.50	Normal	1.00	1	1.50
Combined standard uncertainty (1σ) (dB)						**1.80**
Expanded uncertainty (1.96σ - confidence interval of 95 %) (dB)						**3.53**

12.2.5 Maximum accepted test system uncertainty

Considering the methodology described in clause 5.1, maximum accepted test system uncertainty values for OTA transmitter spurious emissions were derived based on values captured in clauses 12.2.1 to 12.2.4.

Frequency range specific Test Tolerance values for the OTA TX spurious emissions test are defined in tables 12.2.5-1 and 12.2.5-2.

Hence, we have the following MU values for the whole spurious emissions range (for FR1 and FR2 cases):

Table 12.2.5-1: Spurious emissions MU values – FR1

	Expanded uncertainty (dB)		
	30 MHz< f ≤ 6 GHz	6 GHz< f ≤ 19 GHz	19 GHz< f ≤ 26 GHz
General Directional Chamber	2.29	4.14	4.14
Reverberation Chamber	3.29	3.38	3.38
Common maximum accepted test system uncertainty	**2.30**	**4.20**	**4.20**

For FR2 only the frequency range 43.5 GHz < f ≤ 60 GHz has been considered in this clause, the other frequency ranges are common with existing FR1 and FR2 in-band TRP emissions measurements:

- 30 MHz < f ≤ 6 GHz: the MU values are the same as for FR1,
- 6 GHz < f ≤ 43.5 GHz: the MU values are the same as the in-band TRP emission measurements in clause 11.2.

Table 12.2.5-2: Spurious emissions MU values – FR2

	Expanded uncertainty (dB)		
	30 MHz< f ≤ 6 GHz	**6 GHz< f 43.5 GHz**	**43.5 GHz< f ≤ 60 GHz**
General Directional Chamber	x	x	4.94
Compact Antenna Test Range	x	x	4.96
Reverberation Chamber	x	x	3.53
Common maximum accepted test system uncertainty	**2.5**	**2.7**	**5**

12.2.6 Test Tolerance for OTA TX spurious emissions

The conduced test tolerance for the mandatory spurious emissions requirements is zero. As the requirements are set by regulatory limits the same test tolerance is used for OTA.

TT = 0.

12.3 Receiver spurious emissions

12.3.1 General

Clause 12.3 captures MU and TT values derivation for the RX spurious emissions *TRP requirement* in Normal test conditions.

The conducted receiver spurious emission requirement MU is the same as for the TX spurious emissions, the measurement technique is the same and the power level is > -60 dBm (where there is a break point for conducted power measurement accuracy), so this is reasonable.

For the OTA receiver emissions requirements however the lower power level of the requirement reduces the dynamic range of the TRP measurement and reduces measurement accuracy.

Considering that the loss in the chamber is based on the wanted signal being in the far field the per point noise floor is assumed to be approx. -100 dBm and the receiver emissions level translated to the test equipment is approx. -90 dBm. Hence the TRP calculation has only a 10 dB dynamic range.

An uncertainty of 1 dB is added to the TRP uncertainty budget to account for this additional uncertainty.

12.3.2 General Chamber

12.3.2.1 Measurement system description

As the BS antenna radiating dimensions are fixed then the far field distance increases ($FF \approx 2d^2/\lambda$). At 12.75 GHz the far field distance for a 1.5 m BS *antenna array* is almost 200 m, this is clearly impractical in an indoor chamber (and the path loss would also make measurement difficult), so spurious emission testing will not always be in the far field. This is acceptable as the requirement is TRP and hence it is not necessary to measure in the far field however it needs to be considered when looking at MU.

Considerations of the large frequency range must also be considered, including the chamber performance (quiet zone), the calibration effectiveness and the available reference and test antennas over the frequency range.

Measurement system description is captured in clause 7.7.1.

12.3.2.2 Test procedure

12.3.2.2.1 Stage 1: Calibration

Calibration procedure for the general chamber is captured in clause 8.7.

NOTE: The calibration for the out-of-band measurements should be repeated for each frequency being tested and each test antenna.

12.3.2.2.2 Stage 2: BS measurement

The general chamber measurement procedure is the same as described in clause 12.2.2.2.2 (i.e. OTA TX spurious emissions in general chamber).

12.3.2.3 MU value derivation, FR1

Table 12.3.2.3-1 captures derivation of the expanded measurement uncertainty values for OTA RX spurious emissions measurements in general chamber (Normal test conditions, FR1).

Table 12.3.2.3-1: General chamber MU value derivation for RX spurious emissions, FR1

UID	Uncertainty source	Uncertainty value (dB)			Distribution of the probability	Divisor based on distribution shape	c_i	Standard uncertainty u_i (dB)		
		30 MHz < f ≤ 6 GHz	6 < f ≤ 19 GHz	19 < f ≤ 26 GHz				30 MHz < f ≤ 6 GHz	6 < f ≤ 19 GHz	19 < f ≤ 26 GHz
Stage 2: BS measurement										
A5-1	Positioning misalignment between the BS and the reference antenna	0.03	0.03	0.03	Rectangular	1.73	1	0.02	0.02	0.02
A5-2	Pointing misalignment between the BS and the receiving antenna	0.00	0.00	0.00	Rectangular	1.73	1	0.00	0.00	0.00
A5-3	Quality of quiet zone	0.10	0.10	0.10	Gaussian	1.00	1	0.10	0.10	0.10
A5-4a	Polarization mismatch between the BS and the receiving antenna	0.01	0.01	0.01	Rectangular	1.73	1	0.01	0.01	0.01
A5-5a	Mutual coupling between the BS and the receiving antenna	0.00	0.00	0.00	Rectangular	1.73	1	0.00	0.00	0.00
A5-6a	Phase curvature across the BS antenna	0.05	0.05	0.05	Gaussian	1.00	1	0.05	0.05	0.05
C3-4	Receiver spurious emissions - Conducted Uncertainty (minus mismatch)	1.00	2.00	2.00	Gaussian	1.00	1	1.00	2.00	2.00
A5-7	Impedance mismatch in the receiving chain	0.20	0.45	0.45	U-shaped	1.41	1	0.14	0.32	0.32
A5-8	Random uncertainty	0.10	0.10	0.10	Rectangular	1.73	1	0.06	0.06	0.06
A5-17	Measurement antenna frequency variation	0.10	0.10	0.10	Rectangular	1.73	1	0.06	0.06	0.06
A5-18	FSPL estimation error	0.00	0.00	0.00	Gaussian	1.00	1	0.00	0.00	0.00
A5-16	Frequency flatness of test system	0.25	0.25	0.25	Gaussian	1.00	1	0.25	0.25	0.25
A5-19	Measurement system dynamic range uncertainty	0.51	0.51	0.51	Gaussian	1.00	1	0.51	0.51	0.51
Stage 1: Calibration measurement										
A5-9	Impedance mismatch between the receiving antenna and the network analyzer	0.05	0.05	0.05	U-shaped	1.41	1	0.04	0.04	0.04
A5-10	Positioning and pointing misalignment between the reference antenna and the receiving antenna	0.01	0.01	0.01	Rectangular	1.73	1	0.01	0.01	0.01
A5-11	Impedance mismatch between the reference antenna and the network analyzer.	0.05	0.05	0.05	U-shaped	1.41	1	0.04	0.04	0.04
A5-3	Quality of quiet zone	0.10	0.10	0.10	Gaussian	1.00	1	0.10	0.10	0.10
A5-4b	Polarization mismatch between the reference antenna and the receiving antenna	0.01	0.01	0.01	Rectangular	1.73	1	0.01	0.01	0.01

A5-5b	Mutual coupling between the reference antenna and the receiving antenna	0.00	0.00	0.00	Rectangular	1.73	1	0.00	0.00	0.00
A5-6b	Phase curvature across the reference antenna	0.05	0.05	0.05	Gaussian	1.00	1	0.05	0.05	0.05
C1-3	Uncertainty of the network analyzer	0.13	0.20	0.20	Gaussian	1.00	1	0.13	0.20	0.20
A5-12	Influence of the reference antenna feed cable	0.05	0.05	0.05	Rectangular	1.73	1	0.03	0.03	0.03
A5-13	Reference antenna feed cable loss measurement uncertainty	0.06	0.06	0.06	Gaussian	1.00	1	0.06	0.06	0.06
A5-14	Influence of the receiving antenna feed cable	0.05	0.05	0.05	Rectangular	1.73	1	0.03	0.03	0.03
C1-4	Uncertainty of the absolute gain of the reference antenna	0.50	0.43	0.43	Rectangular	1.73	1	0.29	0.25	0.25
A5-15	Uncertainty of the absolute gain of the receiving antenna	0.00	0.00	0.00	Rectangular	1.73	1	0.00	0.00	0.00
Combined standard uncertainty (1σ) (dB)								**1.22**	**2.14**	**2.14**
Expanded uncertainty (1.96σ - confidence interval of 95 %) (dB)								**2.39**	**4.19**	**4.19**
TRP summation error								**0.75**	**0.75**	**0.75**
Total MU								**2.50**	**4.25**	**4.25**

12.3.3 Maximum accepted test system uncertainty

The TRP MU is very similar to that for the transmitter mandatory spurious emissions. However, the receiver requirements are at a much lower power level so TRP calculation may be affected by the noise floor of the measurement system.

For FR2 the following MU are calculated.

Table 12.3.3-1: Receiver spurious emissions MU values – FR1

	Expanded uncertainty (dB)		
	30 MHz< f ≤ 6 GHz	**6 GHz< f ≤ 19 GHz**	**19 GHz< f ⩽ 26 GHz**
General Directional Chamber	2.50	4.25	4.25
Reverberation Chamber	-	-	**-**
Common maximum accepted test system uncertainty	**2.50**	**4.20**	**4.20**

For FR2 the out of band frequency range is much larger, the range can be split into a number of regions:

30 MHz < f ≤ 6 GHz

The same value is assumed for receiver spurious emissions as for transmitter spurious emissions. This is the same as the in band FR2 MU value.

6 GHz < f ≤ 18 GHz

The same value is assumed for receiver spurious emissions as for transmitter spurious emissions. This is the same as the in band FR2 MU value.

18 GHz < f ≤ 43.5 GHz

The same value is assumed for receiver spurious emissions as for transmitter spurious emissions. This is calculated in clause 12.2.5.

43.5 GHz < f ≤ 60 GHz

The same value is assumed for receiver spurious emissions as for transmitter spurious emissions. This is calculated in clause 12.2.5.

Table 12.3.3-2: Receiver spurious emissions MU values

Frequency range	MU (dB)
30 MHz < f ≤ 6 GHz	2.5
6 GHz < f ≤ 18 GHz	2.7
18 GHz < f ≤ 43.5 GHz	2.7
43.5 GHz < f ≤ 60 GHz	5

12.3.4 Test Tolerance for OTA RX spurious emissions

The conduced test tolerance for the receiver spurious emissions requirements is zero. However for OTA BS the receiver spurious emissions requirements only apply to TTD in OFF mode. As such the limit is set by RAN4 to be considerably lower than the equivalent regulatory requirement.

In addition due to the difficulty in measuring low levels of TRP close to the measurement system noise floor the risk of false failures is high. As the risk is due to the noise floor of the measurement system it cannot be mitigated by BS design.

Hence it has been agreed that for receiver spurious emissions the TT = MU.

From December 2019, the regulation around receiver spurious emissions has been clarified in ERC recommendation 74-01 [25] and the requirement has been updated. Since then OTA RX spurious emissions is a regulatory requirement with TT = 0.

12.4 Additional (co-existence) spurious emissions

12.4.1 General

Clause 12.4 captures MU and TT values derivation for the additional (co-existence) spurious emission *TRP requirement* in Normal test conditions.

The additional spurious emissions requirements consist of the co-existence emissions requirements, and some additional regional requirements such as the protection of PHS and 700 and 800 public safety.

The conducted MU are consistent with the mandatory spurious emissions MU.

The test set up for the OTA additional emissions requirements is the same as that for the mandatory spurious emissions in clause 12.2.1. However, the additional spurious emissions are at a much lower level than the mandatory requirements so the additional effect of the test system dynamic range must be considered in the same way as the receiver emissions requirements.

Unlike the other spurious emissions requirements the additional (co-existence) requirements are specified for other 3GPP bands and as such can be measured in the same chambers as the in-band measurements.

As the CATR MU budget results is the largest MU and is used for setting the in-band MU values only the CATR MU is analysed below. However any suitable IAC or NFTR chamber can be used.

12.4.2 Compact Antenna Test Range

12.4.2.1 Measurement system description

The CATR method only is described as it provides the worst MU budget for the additional requirements MU analysis.

Measurement system description is captured in clause 7.3.1, with the Compact Antenna Test Range measurement system setup depicted on figure 8.3-1.

12.4.2.2 Test procedure

12.4.2.2.1 Stage 1: Calibration

Calibration procedure for the Compact Antenna Test Range is captured in clause 8.3.

NOTE: The calibration for the out-of-band measurements should be repeated for each frequency being tested and each test antenna.

12.4.2.2.2 Stage 2: BS measurement

Reference CATR procedure in clause 11.2.3.2.2 (i.e. OTA BS output power in CATR).

The appropriate parameters in step 4 is the mean power of additional spurious emissions test over the measurement BW described in the test requirement.

12.4.2.3 MU value derivation, FR1

Table 12.4.2.3-1 captures derivation of the expanded measurement uncertainty values for additional (co-existence) OTA TX spurious emissions measurements in CATR (Normal test conditions, FR1).

Table 12.4.2.3-1: CATR MU value derivation for additional (co-existence) OTA TX spurious emissions

UID	Uncertainty source	Uncertainty value (dB)			Distribution of the probability	Divisor based on distribution shape	c_i	Standard uncertainty u_i (dB)		
		f ≤ 3 G Hz	3 < f ≤ 4.2 G Hz	4.2 < f ≤ 6 GHz				f ≤ 3 G Hz	3 < f ≤ 4.2 G Hz	4.2 < f ≤ 6 GHz
Stage 2: BS measurement										
A2-18a	Misalignment and pointing error of BS (for TRP)	0.30	0.30	0.30	Rectangular	1.73	1	0.17	0.17	0.17
C3-5	Additional (COEX) emissions - Conducted Uncertainty (minus mismatch)	1.02	1.28	1.53	Gaussian	1.00	1	1.02	1.28	1.53
A2-2a	Standing wave between BS and test range antenna	0.21	0.21	0.21	U-shaped	1.41	1	0.15	0.15	0.15
A2-3	RF leakage (SGH connector terminated & test range antenna connector cable terminated)	0.00	0.00	0.00	Gaussian	1.00	1	0.00	0.00	0.00
A2-4a	QZ ripple experienced by BS	0.09	0.09	0.09	Gaussian	1.00	1	0.09	0.09	0.09
A2-17	Measurement system dynamic range uncertainty	0.51	0.51	0.51	Gaussian	1.00	1	0.51	0.51	0.51
A2-12	Frequency flatness of test system	0.25	0.25	0.25	Gaussian	1.00	1	0.25	0.25	0.25
Stage 1: Calibration measurement										
C1-3	Uncertainty of the network analyzer	0.13	0.20	0.20	Gaussian	1.00	1	0.13	0.20	0.20
A2-5a	Mismatch of receiver chain between receiving antenna and measurement receiver	0.13	0.33	0.33	U-shaped	1.41	1	0.09	0.23	0.23
A2-6	Insertion loss of receiver chain	0.18	0.18	0.18	Rectangular	1.73	1	0.10	0.10	0.10
A2-3	RF leakage (SGH connector terminated & test range antenna connector cable terminated)	0.00	0.00	0.00	Gaussian	1.00	1	0.00	0.00	0.00
A2-7	Influence of the calibration antenna feed cable	0.02	0.02	0.02	U-shaped	1.41	1	0.02	0.02	0.02
C1-4	Uncertainty of the absolute gain of the reference antenna	0.50	0.43	0.43	Rectangular	1.73	1	0.29	0.25	0.25
A2-8	Misalignment positioning system	0.00	0.00	0.00	Exp. normal	2.00	1	0.00	0.00	0.00
A2-1b	Misalignment and pointing error of calibration antenna (for EIRP)	0.50	0.50	0.50	Exp. normal	2.00	1	0.25	0.25	0.25
A2-9	Rotary joints	0.05	0.05	0.05	U-shaped	1.41	1	0.03	0.03	0.03
A2-2b	Standing wave between calibration antenna and test range antenna	0.09	0.09	0.09	U-shaped	1.41	1	0.06	0.06	0.06
A2-4b	QZ ripple experienced by calibration antenna	0.01	0.01	0.01	Gaussian	1.00	1	0.01	0.01	0.01
A2-11	Switching uncertainty	0.26	0.26	0.26	Rectangular	1.73	1	0.15	0.15	0.15
Combined standard uncertainty (1σ) (dB)								**1.28**	**1.51**	**1.73**
Expanded uncertainty (1.96σ - confidence interval of 95 %) (dB)								**2.51**	**2.96**	**3.38**
TRP summation error								**0.75**	**0.75**	**0.75**
Total MU								**2.62**	**3.05**	**3.47**

12.4.3 Maximum accepted test system uncertainty

The additional spurious emission requirements including the co-existence with other BS in the same geographical area are based on existing co-existence with other 3GPP bands so the frequency ranges for the uncertainty assessment are

different from the mandatory spurious emissions. In this case the uncertainty budgets for the in-band chambers are considered in the MU analysis. As the TRP level is at a low power level the measurement system dynamic range uncertainty is also considered as with the receiver spurious emissions.

Table 12.4.3-1: Test system specific MU values for the additional (co-existence) spurious emissions measurement

	Expanded uncertainty (dB)		
	30 MHz< f ≤ 3 GHz	**3 GHz< f ≤ 4.2 GHz**	**4.2 < f < 6 GHz**
Compact Antenna Test Range	2.62	3.05	3.47
Common maximum accepted test system uncertainty	**2.60**	**3.00**	**3.50**

NOTE: There are currently no additional spurious emissions requirements or co-existence requirements for FR2.

12.4.4 Test Tolerance for additional spurious emissions requirements

The conduced test tolerance for the additional spurious emissions requirements is zero.

However for OTA BS, the difficulty in measuring TRP of the additional spurious emissions requirements at low levels close to the measurement system noise floor means the high risk of false failures. As the risk is due to the noise floor of the measurement system it cannot be mitigated by BS design.

As the 3GPP to 3GPP co-existence requirements are not regulatory but set by RAN4 to assist with co-existence of 3GPP systems in the same geographical area it is acceptable for RAN4 to set the TT value to be non-zero.

Hence it has been agreed that for 3GPP to 3GPP co-existence spurious emissions the TT = MU.

Table 12.4.4-1: TT values for the additional (coexistence) spurious emissions measurement

	30 MHz< f ≤ 3 GHz	**3 GHz< f ≤ 4.2 GHz**	**4.2 < f < 6 GHz**
Test Tolerance (dB)	1.8	2.0	

For PHS, and public safety additional requirements the TT = 0 dB.

Some additional requirements such as the protection of PHS and the 700 and 800 MHz public safety bands, are regulatory so it is not possible to have a non-zero TT, hence for these requirements the TT is zero.

13 Co-location requirements

13.1 General

13.2 OTA transmitter OFF power

13.2.1 General

This clause captures MU and TT values derivation for the OTA transmitter OFF power co-location requirement in Normal test conditions.

OTA transmitter ON/OFF power requirements apply only to TDD operation.

The OTA transmit ON/OFF power requirements are co-location requirements and specified as the power sum of the supported polarization(s) at the CLTA conducted output(s).

The FR1 transmitter OFF power and transmitter transient period is a co-location requirement while the FR2 transmitter OFF power requirement is a directional requirement.

It is not possible to separate OTA emissions from separate *transceiver units* therefore OTA emissions requirements are specified as the sum of the emissions from all *transceiver units* in the BS. For spurious emissions this has been the case for both conducted and OTA emissions. The sum of the total emissions from the BS is intended to be no greater than that of a non-AAS system with equivalent number of MIMO branches and hence emission are capped at a level consistent with the maximum MIMO capability of the appropriate RAT (i.e. 8 for E-UTRA and NR, 4 for UTRA), however conducted TX OFF level is specified per *TAB connector* and as such is not subject to the same cap. However as the conducted requirement is primarily concerned with protection of your own receiver and OTA is concerned with co-location the parameters have somewhat changed.

As a co-located TDD receiver should be offered the same protection as any other co-located receiver it is reasonable to apply the same cap on the TX OFF level as is applied to other unwanted emissions.

The FR1 transmitter OFF power is measured as the conducted output of the CLTA, no accurate measurements are required in the chamber itself. The MU analysis of the TX OFF measurement is therefore agnostic to the chamber used. The chambers main purpose is to shield the BS and the CLTA form external interference which may influence the result and to avoid RF reflections which may alter the coupling between the BS and the CLTA.

Hence the MU analysis for FR1 TX OFF is done using a "General chamber" under the assumption that any of the chambers discussed (with the exception of the Reverb chamber) will be suitable.

13.2.2 General Chamber

13.2.2.1 Measurement system description

The general chamber description is intended to cover any suitable chamber type which screens the measurement system for outside interference and does not affect the coupling between the BS and the CLTA.

Measurement system description is captured in clause 7.7.1.

13.2.2.2 Test procedure

13.2.2.2.1 Stage 1: Calibration

Calibration for wanted signal power level is the same as in clause 9.2.

Calibration for the CLTA path is described in clause 8.8.

13.2.2.2.2 Stage 2: measurement

The testing procedure consists of the following steps:

1) Place BS and CLTA as specified for the co-location requirement in TS 37.145-2 [4] clause 4.15 for AAS BS, and in TS 38.141-2 [6] clause 4.12 for NR BS.

2) Place range antenna in boresight direction (reference direction) at far-field distance, aligned in both polarizations with the BS.

3) The Range antenna shall be dual (or single) polarized with the same frequency range as the BS for transmitter OFF power test case.

4) Connect range antenna and CLTA to the measurement equipment.

5) OTA transmitter OFF power is measured at the CLTA conducted output(s).

6) The measurement device (signal analyser) characteristics shall be: Detection mode: True RMS.

7) Set the BS to transmit:

- For BS declared to be capable of single carrier operation only, set the BS to transmit full beam power (rated beam EIRP), both polarizations, in boresight direction (reference direction), at manufacturer's declared rated output power, $P_{rated,t,TRP}$.
- For BS declared to be capable of multi-carrier and/or CA operation, set the BS to transmit full beam power (rated beam EIRP), both polarizations, in boresight direction (reference direction) on all carriers configured using the applicable test configuration and corresponding power setting.
- Check that specified beam power (EIRP) is obtained at range antenna RF output(s) (conducted side) for each polarization. Re-align if the specified beam power is not achieved.

8) Measure the mean power spectral density from all CLTA conducted output(s) over 70 µs filtered with a square filter of bandwidth equal to the RF bandwidth of the RIB centred on the central frequency of the RF bandwidth. 70 µs average window centre is set from 35 µs after end of one *transmitter ON period* + 17 µs to 35 µs before start of next *transmitter ON period* - 6.25 µs.

Additional factor to be considered in the measurement is that the test requirement is very close to thermal noise floor, and the measurement setup needs to be able to tolerate both very high and low signal levels. This will impact measurement uncertainty.

13.2.2.3 MU value derivation, FR1

Table 13.2.2.3-1 captures derivation of the expanded measurement uncertainty values for OTA TX OFF power measurements in General Chamber (Normal test conditions, FR1).

Table 13.2.2.3-1: General chamber MU value derivation for OTA TDD OFF power level measurement

UID	Uncertainty source	Uncertainty value (dB)			Distribution of the probability	Divisor based on distribution shape	c_i	Standard uncertainty u_i (dB)		
		f ≤ 3 GHz	3 < f ≤ 4.2 GHz	4.2 < f ≤ 6 GHz				f ≤ 3 GHz	3 < f ≤ 4.2 GHz	4.2 < f ≤ 6 GHz
Stage 2: BS measurement										
C2-9	Uncertainty related to the selection of the CLTA	1.5	1.5	1.5	Rectangular	1.73	1	0.87	0.87	0.87
C2-10	Uncertainty related to the placement of the CLTA	1.7	1.7	1.7	Rectangular	1.73	1	0.98	0.98	0.98
C2-12	Uncertainty related to measuring close to noise floor Tx OFF	1	1	1	Gaussian	1.00	1	1.00	1.00	1.00
C2-13	Impedance mismatch between feeder cable and CLTA	0.14	0.23	0.25	U-Shaped	1.41	1	0.10	0.16	0.18
C2-14	Gain variations in LNA	0.1	0.1	0.1	Gaussian	1.00	1	0.10	0.10	0.10
A5-8	Random uncertainty	0.1	0.1	0.1	Rectangular	1.73	1	0.06	0.06	0.06
C1-5	Measurement receiver (co-location)	0.41	0.74	0.8	Gaussian	1.00	1	0.41	0.74	0.80
A5-20	Reflections in anechoic chamber	0.01	0.01	0.01	Gaussian	1.00	1	0.01	0.01	0.01
C2-15	Gain variations in measurement amplifier	0.1	0.1	0.1	Gaussian	1.00	1	0.10	0.10	0.10
Stage 1: Calibration measurement										
C1-6	Noise figure measurement accuracy	0.2	0.2	0.2	Gaussian	1.00	1	0.2	0.2	0.2
Combined standard uncertainty (1σ) (dB)								**1.72**	**1.83**	**1.86**
Expanded uncertainty (1.96σ - confidence interval of 95 %) (dB)								**3.37**	**3.59**	**3.64**

UID are referenced to annex A, B or C as appropriate.

13.2.3 Maximum accepted test system uncertainty

Maximum test system uncertainties derivation methodology was described in clause 5.1. The maximum accepted test system uncertainty values was derived based on test system specific values in clause 13.2.2.

Table 13.2.3-1: Common maximum accepted test system uncertainty value derivation for TDD OFF power level measurement

	Expanded uncertainty (dB)		
	f ≤ 3 GHz	3 < f ≤ 4.2 GHz	4.2 < f ≤ 6 GHz
General Chamber	3.37	3.59	3.64
Common maximum accepted test system uncertainty	**3.40**	**3.60**	**3.60**

Fulfilling the criteria for CLTA selection and placement in is deemed sufficient for the test purposes. When these criteria are met, the measurement uncertainty related to the selection of the CLTA and its alignment as shall be used for evaluating the test system uncertainty.

13.2.4 Test Tolerance for OTA TX OFF power

Considering the methodology described in clause 5.1, Test Tolerance values for TX OFF were derived based on values captured in clause 13.2.3.

The TT was decided to be the same as the MU for TX OFF in FR1.

Table 13.2.4-1: Test Tolerance values for the TX OFF in Normal test conditions

	f ≤ 3 GHz	3 < f ≤ 4.2 GHz	4.2 < f ≤ 6 GHz
Test Tolerance (dB)	3.4	3.6	3.6

An overview of the TT values for all the requirements is captured in clause 18.

13.3 OTA co-location spurious emissions

13.3.1 General

This clause captures MU and TT values derivation for the OTA co-location spurious emissions requirement in Normal test conditions.

The FR1 OTA co-location emissions are measured as the conducted output of the CLTA, no accurate measurements are required in the chamber itself. The MU analysis of the co-location emissions measurement is therefore agnostic to the chamber used. The chambers main purpose is to shield the BS and the CLTA form external interference which may influence the result and to avoid RF reflections which may alter the coupling between the BS and the CLTA.

Hence the MU analysis for FR1 co-location emissions is done using a "General chamber" under the assumption that any of the chambers discussed (with the exception of the Reverb chamber) will be suitable.

13.3.2 General Chamber

13.3.2.1 Measurement system description

The general chamber description is intended to cover any suitable chamber type which screens the measurement system for outside interference and does not affect the coupling between the BS and the CLTA.

Measurement system description is captured in clause 7.7.1.

13.3.2.2 Test procedure

13.3.2.2.1 Stage 1: Calibration

Calibration for wanted signal power level is the same as in clause 9.2.

Calibration for the CLTA path is described in clause 8.8.

13.3.2.2.2 Stage 2: BS measurement

The testing procedure consists of the following steps:

1) Place BS and CLTA as specified in clause 4.15, TS 37.145-2 [4].
2) Place range antenna in boresight direction (reference direction) at far-field distance, aligned in both polarizations with the BS.
3) Connect range antenna and CLTA to the measurement equipment.
4) OTA co-location spurious emissions are measured at the CLTA conducted output(s).
5) The measurement device (signal analyser) characteristics shall be: Detection mode: True RMS.
6) Set the BS to transmit:
   - For BS declared to be capable of single carrier operation only, set the BS to transmit full beam power (rated beam EIRP), both polarizations, either simultaneously or sequentially, in boresight direction (reference direction), at manufacturer's declared rated output power, $P_{rated,t,TRP}$.
   - For BS declared to be capable of multi-carrier and/or CA operation, set the BS to transmit full beam power (rated beam EIRP), both polarizations, in boresight direction (reference direction) on all carriers configured using the applicable test configuration and corresponding power setting.
   - Check that specified beam power (EIRP) is obtained at Range antenna RF output(s) (conducted side) for each polarization. Re-align if the specified beam power is not achieved.
7) Measure the mean power spectral density from all CLTA conducted output(s) with each wanted signal polarization under test.

Additional factor to be considered in the measurement is that the test requirement is very close to thermal noise floor, and the measurement setup needs to be able to tolerate both very high and low signal levels. This will impact measurement uncertainty.

13.3.2.3 MU value derivation, FR1

Table 13.3.2.3-1 captures derivation of the expanded measurement uncertainty values for OTA co-location spurious emissions measurements in General Chamber (Normal test conditions, FR1).

Table 13.3.2.3-1: General chamber MU value derivation for co-location spurious emissions level measurement

UID	Uncertainty source	Uncertainty value (dB)			Distribution of the probability	Divisor based on distribution shape	c_i	Standard uncertainty u_i (dB)		
		f ≤ 3 GHz	3 < f ≤ 4.2 GHz	4.2 < f ≤ 6 GHz				f ≤ 3 GHz	3 < f ≤ 4.2 GHz	4.2 < f ≤ 6 GHz
Stage 2: BS measurement										
C2-9	Uncertainty related to the selection of the CLTA	1.5	1.5	1.5	Rectangular	1.73	1	0.87	0.87	0.87
C2-10	Uncertainty related to the placement of the CLTA	1.7	1.7	1.7	Rectangular	1.73	1	0.98	0.98	0.98
C2-11	Uncertainty related to measuring close to noise floor - Emissions	0.68	0.68	0.68	Gaussian	1.00	1	0.68	0.68	0.68
C2-13	Impedance mismatch between feeder cable and CLTA	0.14	0.23	0.25	U-Shaped	1.41	1	0.10	0.16	0.18
C2-14	Gain variations in LNA	0.1	0.1	0.1	Gaussian	1.00	1	0.10	0.10	0.10
A5-8	Random uncertainty	0.1	0.1	0.1	Rectangular	1.73	1	0.06	0.06	0.06
C1-5	Measurement receiver (co-location)	0.41	0.74	0.8	Gaussian	1.00	1	0.41	0.74	0.80
A5-20	Reflections in anechoic chamber	0.01	0.01	0.01	Gaussian	1.00	1	0.01	0.01	0.01
C2-15	Gain variations in measurement amplifier	0.1	0.1	0.1	Gaussian	1.00	1	0.10	0.10	0.10
Stage 1: Calibration measurement										
C1-6	Noise figure measurement accuracy	0.2	0.2	0.2	Gaussian	1	1	0.2	0.2	0.2
Combined standard uncertainty (1σ) (dB)								**1.55**	**1.68**	**1.71**
Expanded uncertainty (1.96σ - confidence interval of 95 %) (dB)								**3.05**	**3.29**	**3.34**

UID are referenced to annex A, B or C as appropriate.

13.3.3 Maximum accepted test system uncertainty

Maximum test system uncertainties derivation methodology was described in clause 5.1. The maximum accepted test system uncertainty values was derived based on test system specific values in clause 13.3.2.

Table 13.3.3-1: Common maximum accepted test system uncertainty value derivation for co-location emissions level measurement

	Expanded uncertainty (dB)		
	f ⩽ 3 GHz	3 < f ⩽ 4.2 GHz	4.2 < f ⩽ 6 GHz
General Chamber	3.05	3.29	3.34
Common maximum accepted test system uncertainty	**3.1**	**3.3**	**3.4**

Fulfilling the criteria for CLTA selection and placement in is deemed sufficient for the test purposes. When these criteria are met, the measurement uncertainty related to the selection of the CLTA and its alignment as shall be used for evaluating the test system uncertainty.

13.3.4 Test Tolerance co-location spurious emissions

Considering the methodology described in clause 5.1, Test Tolerance values for co-location emissions were derived based on values captured in clause 13.3.3.

The TT was decided to be the same as the MU for TX OFF in FR1.

Table 13.3.4-1: Test Tolerance values for the co-location emissions in Normal test conditions

	f ≤ 3 GHz	3 < f ≤ 4.2 GHz	4.2 < f ≤ 6 GHz
Test Tolerance (dB)	3.1	3.3	3.4

An overview of the TT values for all the requirements is captured in clause 18.

13.4 OTA transmitter intermodulation

13.4.1 General

This clause captures MU and TT values derivation for the OTA transmitter intermodulation co-location requirement in Normal test conditions.

The transmitter intermodulation requirement is that the spurious emissions requirements (OTA transmitter spurious emissions, OTA operating band unwanted emissions/SEM and OTA ACLR) are met whilst an interferer is injected into the antenna from a co-located bases station.

The measurement method and uncertainty for those measurements is the same as described in clauses 12.2, 11.3 and 11.4.

There is an additional uncertainty however associated with the accuracy of the interfering signal injected from the CLTA. It is that uncertainty which is investigated in this clause.

The interferer is injected into the CLTA and the accuracy of this is not dependent on the chamber type used. The measurement uncertainty calculation is therefore done using a general chamber type.

13.4.2 General Chamber

13.4.2.1 Measurement system description

This method measures the OTA TX IMD in a general chamber.

Measurement system description is captured in clause 7.7.1.

13.4.2.2 Test procedure

13.4.2.2.1 Stage 1: Calibration

Calibration for the emissions measurement is the same as in clause 11.3, 11.5 and 12.2.

Calibration for the CLTA path is described in clause 8.8.

13.4.2.2.2 Stage 2: BS measurement

The general chamber testing procedure consists of the following steps:

1) Uninstall the reference antenna and install the BS with the manufacturer declared coordinate system reference point in the same place as the phase centre of the reference antenna. The manufacturer declared coordinate system orientation of the BS is set to be aligned with the testing system.

2) Set the CLTA as specified in in TS 37.145-2 [4] clause 4.15 for AAS BS, and in TS 38.141-2 [6] clause 4.12 for NR BS, at the declared worst case side.

3) Set the signal generator to generate the interfering signal to achieve the required level at the input port of CLTA.

4) Perform required ACLR, OBUE (for E-UTRA/NR), SEM (for UTRA), occupied bandwidth, spurious emission tests according to the corresponding testing procedures.

13.4.2.3 MU value derivation, FR1

Table 13.4.2.3-1 captures derivation of the expanded measurement uncertainty values for OTA transmitter intermodulation measurements in General Chamber (Normal test conditions, FR1).

Table 13.4.2.3-1: MU for OTA transmitter intermodulation interferer signal

UID	Uncertainty source	Uncertainty value (dB)			Distribution of the probability	Divisor based on distribution shape	c_i	Standard uncertainty u_i (dB)		
		f ≤ 3 GHz	3 < f ≤ 4.2 GHz	4.2 < f ≤ 6 GHz				f ≤ 3 GHz	3 < f ≤ 4.2 GHz	4.2 < f ≤ 6 GHz
Stage 2: BS measurement										
C2-9	Uncertainty related to the selection of the CLTA	1.50	1.50	1.50	Rectangular	1.73	1	0.87	0.87	0.87
C2-10	Uncertainty related to the placement of the CLTA	1.70	1.70	1.70	Rectangular	1.73	1	0.98	0.98	0.98
C2-13	Impedance mismatch between feeder cable and CLTA	0.14	0.23	0.25	U-Shaped	1.41	1	0.10	0.16	0.18
A5-8	Random uncertainty	0.10	0.10	0.10	Rectangular	1.73	1	0.06	0.06	0.06
A5-20	Reflections in anechoic chamber	0.01	0.01	0.01	Gaussian	1.00	1	0.01	0.01	0.01
Stage 1: Calibration measurement										
C3-6	TX IMD - conducted measurement uncertainty	1.00	1.10	1.20	Gaussian	1.00	1	1.00	1.10	1.20
Combined standard uncertainty (1σ) (dB)								**1.65**	**1.72**	**1.79**
Expanded uncertainty (1.96σ - confidence interval of 95 %) (dB)								**3.24**	**3.37**	**3,50**

UID are referenced to annex A, B or C as appropriate.

13.4.3 Maximum accepted test system uncertainty

Maximum test system uncertainties derivation methodology was described in clause 5.1. The maximum accepted test system uncertainty values was derived based on test system specific values in clause 13.4.4.

Table 13.4.3-1: Common maximum accepted test system uncertainty value derivation for co-location TX IMD interferer signal level

	Expanded uncertainty (dB)		
	f ≤ 3 GHz	3 < f ≤ 4.2 GHz	4.2 < f ≤ 6 GHz
General Chamber	3.24	3.37	3.50
Common maximum accepted test system uncertainty	**3.20**	**3.40**	**3.50**

Fulfilling the criteria for CLTA selection and placement in is deemed sufficient for the test purposes. When these criteria are met, the measurement uncertainty related to the selection of the CLTA and its alignment as shall be used for evaluating the test system uncertainty.

13.4.4 Test Tolerance co-location spurious emissions

The test tolerance for the emissions measurements (OTA transmitter spurious emissions, OTA operating band unwanted emissions/SEM and OTA ACLR) is as specified for each specific requirement.

The test tolerance for the interferer level is zero.

13.5 OTA co-location blocking

13.5.1 General

This clause 13.5 captures MU and TT values derivation for the OTA co-location blocking requirement in Normal test conditions.

The OTA co-location blocking measurement uncertainty is calculated as a combination of the wanted signal MU and the interferer signal MU in the same way as the normal out of band blocking requirement, where:

$$MU_{colocation\ blocking} = \sqrt{MU^2_{wanted\ signal} + MU^2_{interferer}} + Noise_{effect}$$

The $Noise_{effect}$ from the signal generator is 0.1 dB and the $MU_{wantedsignal}$ value is MU_{EIS} from clause 10.2.

The measurement uncertainty associated with the interferer is based on the accuracy of the interfering signal injected from the CLTA. It is that uncertainty which is investigated in this clause.

The interferer is injected into the CLTA and the accuracy of this is not dependent on the chamber type used. The measurement uncertainty calculation is therefore done using a general chamber type.

Any chamber capable of performing the EIS measurement to the required accuracy is suitable for the test however.

13.5.2 General Chamber

13.5.2.1 Measurement system description

This method measures the OTA co-location blocking characteristics in a general chamber.

Measurement system description is captured in clause 7.1.

13.5.2.2 Test procedure

13.5.2.2.1 Stage 1: Calibration

Calibration for wanted signal power level is the same as in clause 10.2.

Calibration for the CLTA path is described in clause 8.8.

13.5.2.2.2 Stage 2: BS measurement

The general chamber testing procedure consists of the following steps:

1) Place NR BS and CLTA as specified in TS 37.145-2 [4] clause 4.15 for AAS BS, and in TS 38.141-2 [6] clause 4.12 for NR BS, at the declared worst case side. Several CLTA are required to cover the whole co-location blocking frequency ranges. The CLTA shall be selected according to clause 6.4.

2) Align the NR BS and test antenna(s) according to the directions to be tested.

3) Connect test antenna and CLTA to the measurement equipment as depicted in clause 7.7.

5) The NR BS receives the wanted signal in all supported polarizations, in the *receiver target reference direction* from the test antenna.

6) The OTA co-location blocking interferer is injected via the CLTA. The CLTA is fed with the specified co-location blocking interferer power per supported polarization.

7) Generate the wanted signal in *receiver target reference direction*, all supported polarizations, from the test antenna, according to the applicable test configuration using applicable reference measurement channel to the RIB.

8) Configure the *beam peak direction* for the transmitter units associated with the RIB under test according to the declared reference *beam direction pair* for the appropriate beam identifier with the carrier set-up and power allocation according to the applicable test configuration(s). The transmitter may be turned OFF for the out-of-band blocker tests when the frequency of the blocker is such that no IM2 or IM3 products fall inside the bandwidth of the wanted signal.

9) Adjust the signal generators to the type of interfering signals, levels and the frequency offsets as specified for general test requirements and, when applicable, for co-location test requirements.

10) The CW interfering signal shall be swept with a step size of 1 MHz within the frequency range corresponding to downlink operating bands related to co-located systems.

11) Measure the performance of the wanted signal at the receiver unit associated with the RIB.

13.5.2.3 MU value derivation, FR1

The MU for the interferer signal is as follows:

Table 13.5.2.3-1: MU for co-location blocking interferer signal

UID	Uncertainty source	Uncertainty value (dB)			Distribution of the probability	Divisor based on distribution shape	c_i	Standard uncertainty u_i (dB)		
		f ≤ 3 GHz	3 < f ≤ 4.2 GHz	4.2 < f ≤ 6 GHz				f ≤ 3 GHz	3 < f ≤ 4.2 GHz	4.2 < f ≤ 6 GHz
Stage 2: BS measurement										
C2-9	Uncertainty related to the selection of the CLTA	1,50	1,50	1,50	Rectangular	1,73	1	0,87	0,87	0,87
C2-10	Uncertainty related to the placement of the CLTA	1,70	1,70	1,70	Rectangular	1,73	1	0,98	0,98	0,98
C2-13	Impedance mismatch between feeder cable and CLTA	0,14	0,23	0,25	U-Shaped	1,41	1	0,10	0,16	0,18
A5-8	Random uncertainty	0,10	0,10	0,10	Rectangular	1,73	1	0,06	0,06	0,06
A5-3	Quality of quiet zone	0,10	0,10	0,10	Gaussian	1,00	1	0,10	0,10	0,10
Stage 1: Calibration measurement										
C3-7	Colocation blocking - conducted measurement uncertainty	1,00	1,10	1,20	Gaussian	1,00	1	1,00	1,10	1,20
Combined standard uncertainty (1σ) (dB)								**1,65**	**1,72**	**1,79**
Expanded uncertainty (1.96σ - confidence interval of 95 %) (dB)								**3,24**	**3,37**	**3,51**

UID are referenced to annex A, B or C as appropriate.

13.5.3 Maximum accepted test system uncertainty

The final MU is calculated as follows:

$$MU = \sqrt{MU^2_{wantedsignal} + MU^2_{interferer}} + Noise_{effect}$$

The $Noise_{effect}$ from the signal generator is 0.1 dB and the $MU_{wantedsignal}$ value is MU_{EIS} from clause 10.2.7, where $MU_{interferer}$ is derived in clause 14.2.3.

Table 13.5.3-1: Common maximum accepted test system uncertainty value derivation for co-location blocking interferer signal level

	Expanded uncertainty (dB)		
	f ≤ 3 GHz	**3 < f ≤ 4.2 GHz**	**4.2 < f ≤ 6 GHz**
General Chamber	3,24	3,37	3,51
Common maximum accepted test system uncertainty	**3,20**	**3,40**	**3,50**

Fulfilling the criteria for CLTA selection and placement in is deemed sufficient for the test purposes. When these criteria are met, the measurement uncertainty related to the selection of the CLTA and its alignment as shall be used for evaluating the test system uncertainty.

The final values are given in table 13.5.3-2.

Table 13.5.3-2: MU values for co-location blocking

Co-location blocking MU (dB)		**Wanted signal operating band**		
		30 MHz< f ≤ 3 GHz	**3 GHz< f ≤ 4.2 GHz**	**4.2 < f ≤ 6 GHz**
Interferer frequency	30 MHz< f ≤ 3 GHz	3,4	3,5	3,6
	3 GHz< f ≤ 4.2 GHz	3,5	3,6	3,8
	4.2 < f ≤ 6 GHz	3,7	3,7	3,8

13.5.4 Test Tolerance for OTA co-location blocking

The test tolerance for co-location out of band blocking is zero.

14 Out-of-band blocking requirements

14.1 General

Clause 14 captures MU and TT values derivation for the OTA out-of-band blocking requirement in Normal test conditions.

The OTA out-of-band blocking requirement requires both a wanted in-band signal and an interferer out-of-band signal to be transmitted with the chamber. The wanted signal is defined in the far field, the interferer is defined as a field strength, due to the large range for frequencies it will not always be in the far field.

Hence any acceptable measurement chamber for the OTA sensitivity requirement is also suitable for the OTA out-of-band blocking requirement, it may be necessary that the interfering signal is transmitted from a separate antenna due to the large frequency range of the interferer.

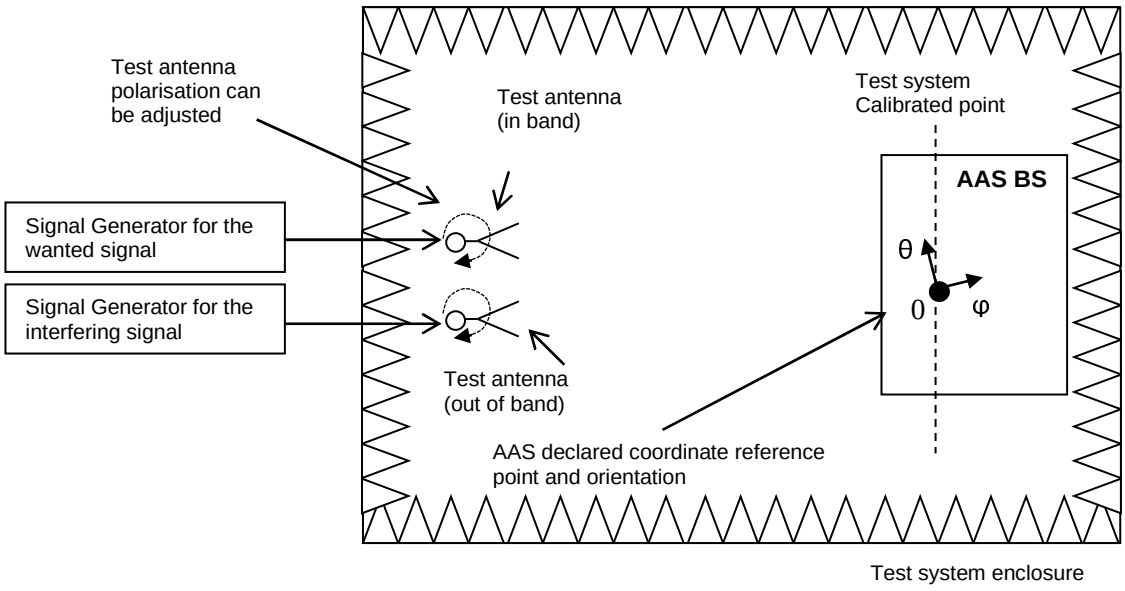

Figure 14.1-1: General blocking test set-up using a different antenna

Worst case the wanted and interfering signal are transmitted from separate test antennas, hence they each may have a different uncertainty associated with the OTA chamber. This differs from the in-band interference measurements where the wanted signal and the interferer are added together outside the chamber and applied to the same test antenna and hence have a common OTA chamber uncertainty.

The uncertainty of the interferer is analysed in this clause using a general chamber assumption. The requirement may be tested in any suitable chamber (e.g. IAC, CATR) that is capable of measuring EIS accurately and also applying the out-of-band interferer. For interferer frequencies where it can be applied from a common antenna (like the in-band requirements) this is acceptable but it is expected the MU will be lower so will not influence the final MU value. The chosen chamber must of course be specified to handle the frequency of both the interferer and the wanted signal. The complete out-of-band blocking test may be completed using multiple chambers for different frequency ranges if necessary.

The distance between the test object and test antenna injecting the interferer signal is adjusted when necessary to ensure specified interferer signal level to be received.

14.2 General Chamber

14.2.1 Measurement system description

Measurement system description is captured in clause 7.7.1.

A general chamber is analysed for the interferer MU value, this is considered worst case for setting the MU value.

14.2.2 Test procedure

14.2.2.1 Stage 1: Calibration

For the wanted signal the calibration procedure and MU for the OTA sensitivity in clause 10.2 can be assumed for each chamber type and FR.

The interferer path is calibrated using the same method with appropriate antennas.

14.2.2.2 Stage 2: BS measurement

The general chamber testing procedure consists of the following steps:

1) Place test antenna(s) in at appropriate test directions, at appropriate distance, aligned in all supported polarizations (single or dual) with the BS.

2) Connect test antenna(s) to the measurement equipment.

3) The test antenna(s) shall be dual (or single) polarized covering the same frequency ranges as the BS and the blocking frequencies. If the test antenna does not cover both the wanted and interfering signal frequencies, separate test antennas for the wanted and interfering signal are required.

4) The OTA blocking interferer is injected into the test antenna, with the blocking interferer producing specified interferer field strength level for each supported polarization. The interferer shall be *polarization matched* to the BS in band and the position maintained for OOB measurements.

5) The BS receives the wanted signal and the interferer signal for all supported polarizations (single or dual), in the reference direction from the test antenna(s).

14.2.3 MU value derivation, FR1

The MU value for OTA out-of-band blocking consists of the MU value for the wanted signal and the MU value for the interfering signal.

The unwanted signal is defined as a field strength so can be applied in the near field with the assumption that the test antenna fully illuminated the BS under test. For the purposes of calculating a MU value of the interfering signal the same general out-of-band OTA chamber used for the TX spurious emissions requirement in clause 12.2 is assumed.

The out-of-band blocking is analysed using the same methodology as the other receiver interference requirements where:

$$MU = \sqrt{MU_{wantedsignal}^{2} + MU_{interferer}^{2}} + Noise_{effect}$$

The $MU_{wantedsignal}$ of the wanted signal is the same as that for the OTA sensitivity requirement.

The $Noise_{effect}$ MU from the signal generator for the broad band noise effect is the same as the conducted requirement (i.e. 0.1 dB).

The MU assessment for the general chamber is as follows:

Table 14.2.3-1: MU assessment for out-of-band blocking interferer

The OTA chamber is one part of the total interferer MU value. The rest of the MU is from the conducted signal accuracy, for this the conducted accuracy is used as a guide. In addition care is taken to ensure the mismatch is not added twice (from the chamber and the conducted value) and also it is considered if a PA is needed to achieve sufficient test signal power level.

The interferer is specified as a field strength of 0.36 V/m, the required conducted power level depends one chamber size (the FSPL) the test *antenna gain* and the conducted signal path, and example is given in table 14.2.3-2.

Table 14.2.3-2: Example of required conducted interferer level

OOB blocking interferer level		
Field strength	0.36	V/m
d	4	m
EIRP	18.40	dBm
Antenna	5	dBi
Cables, filers, etc.	10	dB
Signal generator	**23.40**	dBm

Some signal generators can provide 23.4 dBm but it is at the top end so it is sensible to consider a PA in the test set up.

The $MU_{interferer}$ value is hence given by:

$$MU_{interferer} = \sqrt{MU_{interferer\_conducted}^{2} - MU_{missmatch}^{2} + MU_{PA}^{2} + MU_{general\_chamber}^{2}}$$

For each of the frequency ranges this gives the value in table 14.2.3-3.

Table 14.2.3-3: $MU_{interferer}$ values

Frequency range	cond. int. (mod)	PA	cond. matching	out-of-band chamber	OTA interferer
30 MHz < f ≤ 3 GHz	1	0.2	0.294	0.93	1.35
3 GHz < f ≤ 6 GHz	1.2	0.2	0.294	0.93	1.50
6 GHz < f ≤ 12.75 GHz	3	0.2	0.55	1.12	3.16

The final MU for the OTA out-of-band blocking requirement is calculated as follows:

$$MU = \sqrt{MU_{wantedsignal}^{2} + MU_{interferer}^{2}} + Noise_{effect}$$

The $Noise_{effect}$ from the signal generator is 0.1 dB and the $MU_{wantedsignal}$ value is MU_{EIS} from clause 10.2.

The final values are given in table 14.2.3-4:

Table 14.2.3-4: MU values for out-of-band blocking

OOB blocking MU (dB)		Wanted signal operating band		
		30 MHz < f ≤ 3 GHz	3 GHz < f ≤ 4.2 GHz	4.2 GHz < f ≤ 6 GHz
Interferer frequency	30 MHz < f ≤ 3 GHz	2.0	2.2	2.2
	3 GHz < f ≤ 6 GHz	2.1	2.1	2.3
	6 GHz < f ≤ 12.75 GHz	3.5	3.6	3.6

14.2.4 MU value derivation, FR2

It has been agreed that the MU for the out-of-band blocking requirement can be calculated as follows:

$$MU_{OOBB} = \sqrt{MU_{EIS}^2 + MU_{OOBint}^2 + MU_{PA}^2} + \text{Broadband noise effect}$$

With

$$MU_{EIS}(1.96\sigma) = 2.4$$

$$MU_{OOBint}(1.96\sigma) = 1.96 \times 1.1$$

$$MU_{PA}(1.96\sigma) = 1.96 \times 0.2$$

And

$$\text{Broadband noise effect}(1.96\sigma) = 0.4$$

Substituting the variables above into the formula, the MU in FR2 for the out-of-band blocking requirement can be calculated as 3.6 dB, as shown in table 14.2.4-1 below.

Table 14.2.4-1: MU for out-of-band blocking, FR2

Test System Uncertainty	Standard uncertainty u_i (dB) IAC, CATR
MU_{EIS} (Expanded uncertainty)	2.4
MU_{OOBint} (Additional uncertainty for the OOB interferer signal)	1.1
MU_{PA} (Uncertainty due to use of PA)	0.2
Broadband noise effect (Impact of interferer broadband noise)	0.4
Combined standard uncertainty (1σ)	**1.86**
Expanded uncertainty (1.96σ - confidence interval of 95 %)	**3.6**

14.3 Maximum accepted test system uncertainty

The final values are given in table 14.3-1.

Table 14.3-1: MU values for out of band blocking

OOB blocking MU (dB)		Wanted signal operating band
		4.2 GHz< f ≤ 6 GHz
Interferer frequency	30 MHz< f ≤ 3 GHz	2.2
	3 GHz< f ≤ 6 GHz	2.3
	6 GHz< f ≤ 12.75 GHz	3.6

14.4 Test Tolerance for OOB blocking

It has been agreed that the TT for the out-of-band blocking requirement should be zero.

15 Demodulation performance requirements

15.1 General

This clause describes the OTA aspects of the test procedure for assessing demodulation requirements, based on the analysis of the UTRA FDD and E-UTRA demodulation requirements which were found feasible OTA, as captured in clause 15.2. The same principles are to be used for the analysis of the OTA demodulation performance requirements for NR.

The OTA part of the test procedure is the same for each requirement.

15.2 BS demodulation requirements feasible OTA

The feasibility analysis of the OTA test cases modelling concluded that the conducted test case with one TX (UE side) and one or two RX chains (BS side) were identified as candidates for feasible OTA demodulation cases.

For 2RX case the cross-polarisation is assumed to be used in order to achieve separation of streams at the RX side of OTA test setup. Most of the conducted test cases in 1TX-1RX, or 1TX-2RX configuration, can be implemented in OTA test setups as illustrated in figures 15.3-1 and 15.3-2 for the multipath fading propagation conditions, and in figures 15.3-3 and 15.3-4 for the static propagation conditions.

Based on the analysis of the conducted BS demodulation requirements for UTRA FDD and E-UTRA, the single RAT requirements considered as feasible in OTA test setup were listed in tables 15.2-1 and 15.2-2 for UTRA and E-UTRA. The same principles (i.e. based on cross-polarisation) are to be used for the analysis of the OTA demodulation performance requirements for NR.

Table 15.2-1: UTRA FDD BS demodulation requirements feasible OTA

UTRA FDD BS demodulation requirements		Tx (UE emulator)	Rx (OTA BS)
Demodulation in static propagation conditions	DCH	1Tx	1Rx, 2Rx
Demodulation of DCH in multipath fading conditions			1Rx, 2Rx
Demodulation of DCH in moving propagation conditions			1Rx, 2Rx
Demodulation of DCH in birth/death propagation conditions			1Rx, 2Rx
Demodulation of DCH in high speed train conditions			1Rx, 2Rx
Performance requirement for RACH preamble detection	RACH		1Rx, 2Rx
Demodulation of RACH message			1Rx, 2Rx
ACK false alarm	HS-DPCCH		2Rx
ACK mis-detection			2Rx
ACK/NACK detection for 4C-HSDPA HS-DPCCH (ACK false alarm, ACK mis-detection)			2Rx
ACK/NACK detection for 8C-HSDPA HS-DPCCH			2Rx
E-DPDCH in multipath fading condition	E-DPDCH		1Rx, 2Rx
E-DPDCH and S-E-DPDCH in multipath fading condition for UL MIMO			2Rx
Signalling detection for E-DPCCH in multipath fading condition			1Rx, 2Rx

Table 15.2-2: E-UTRA BS demodulation requirements feasible OTA

E-UTRA BS demodulation requirements		Tx (UE emulator)	Rx (OTA BS)
PUSCH in multipath fading propagation conditions transmission	PUSCH	1Tx	2Rx
UL timing adjustment			2Rx
HARQ-ACK multiplexed on PUSCH			2Rx
High Speed Train conditions			1Rx, 2Rx
PUSCH with TTI bundling and enhanced HARQ pattern			2Rx
Enhanced performance requirement type A in multipath fading propagation conditions, synchronous interference			2Rx
Enhanced performance requirement type A in multipath fading propagation conditions, asynchronous interference			2Rx
Enhanced performance requirement type B in multipath fading propagation conditions			2Rx
Requirements for PUSCH supporting coverage enhancement			2Rx
Requirements for PUSCH supporting Cat-M1 UEs			2Rx
ACK missed detection for single user PUCCH format 1a transmission	PUCCH		2Rx
CQI performance requirements for PUCCH format 2 transmission			2Rx
ACK missed detection for multi user PUCCH format 1a			2Rx
ACK missed detection for PUCCH format 1b with Channel Selection			2Rx
ACK missed detection for PUCCH format 3			2Rx
NACK to ACK detection for PUCCH format 3			2Rx
CQI performance requirements for PUCCH format 2 with DTX detection			2Rx
PUCCH performance requirements for supporting Cat-M1 UEs			2Rx
ACK missed detection requirements for PUCCH format 4			2Rx
ACK missed detection requirements for PUCCH format 5			2Rx
PRACH missed detection, normal mode	PRACH		2Rx
PRACH missed detection, high speed mode restricted set type A			2Rx
PRACH missed detection, Cat-M1 mode			2Rx
PRACH missed detection, high speed mode restricted set type B			2Rx

It is noted, that the possibility of OTA testing is considered also for those BS demodulation requirements, which were declared as optional.

The OTA related parts of the conformance testing test procedures for the demodulation requirements are based upon the OTA RX dynamic range requirement procedure, as described in clause 10.4. The setup and operation of the signal generator and measurement instruments are the same as for the corresponding conducted requirements.

The demodulation requirements are in essence very similar to the RX dynamic range requirement; in both cases a wanted signal and AWGN is transmitted from the test equipment and should be reassured to be received at the absolute level well above the noise floor. The test equipment setup for demodulation requirements may include multiple wanted and interference signals and a fading channel emulators, as described in clause 15.3.

15.3 OTA test setup for BS demodulation requirements

As the BS demodulation requirements rely on the link level performance between the UE and BS, in case of the requirements definition for the BS, it is required to establish radio link in uplink based on the test equipment (i.e. BS Tester test and reference antenna(s)) located within the RoAoA corresponding to the frequency band used for the BS demodulation testing.

For PUSCH testing purposes in OTA setup, the HARQ feedback can be delivered to the BS Tester via conducted interface.

Figure 15.3-1 shows BS measurement test setup for multipath fading propagation conditions, which is equivalent to the conducted 1TX – 1RX test setup.

The OTA BS is comprised in an anechoic chamber and is configured to receive with single RX configuration. Test signal source is connected to the single TX test antenna. The radio propagation channel is emulated by connecting a fading channel emulator between the test signal generator and the TX antenna.

NOTE: OTA demodulation requirements can be tested in IAC, as well as in CATR, as outlined in clause 15.4 and 15.5. All the examples of the OTA test setups for the BS demodulation requirements are based on the IAC test setup.

AWGN noise floor levels required in the conformance test setup are to be derived from conducted BS demodulation test setup procedures. Wanted signal generators are configured so that the SNR levels defined by the demodulation requirements are achievable at the BS. For SNR derivation, the noise injection at the BS tester side is considered as the baseline approach.

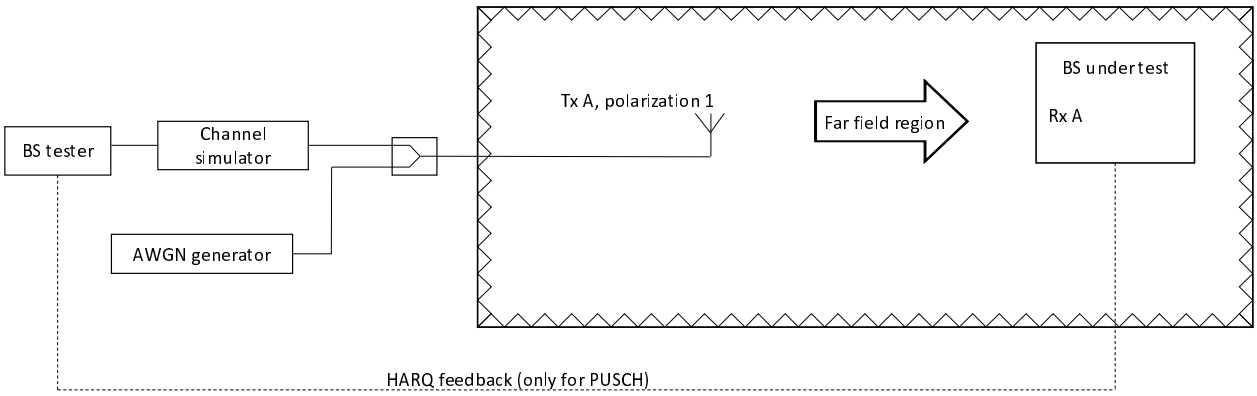

Figure 15.3-1: OTA test setup for multipath fading propagation conditions (equivalent to conducted 1TX – 1RX)

Figure 15.3-2 shows BS measurement test setup for multipath fading propagation conditions, which is equivalent to the conducted 1TX – 2RX test setup. The BS is comprised in an anechoic chamber and is configured to receive with 2RX diversity in a cross-polarised configuration. Test signal source is connected to the 2TX tests antenna in cross-polarised configuration. The two orthogonal radio propagation channels are emulated by passing the same test signal trough one fading channel emulator for each of TX antennas.

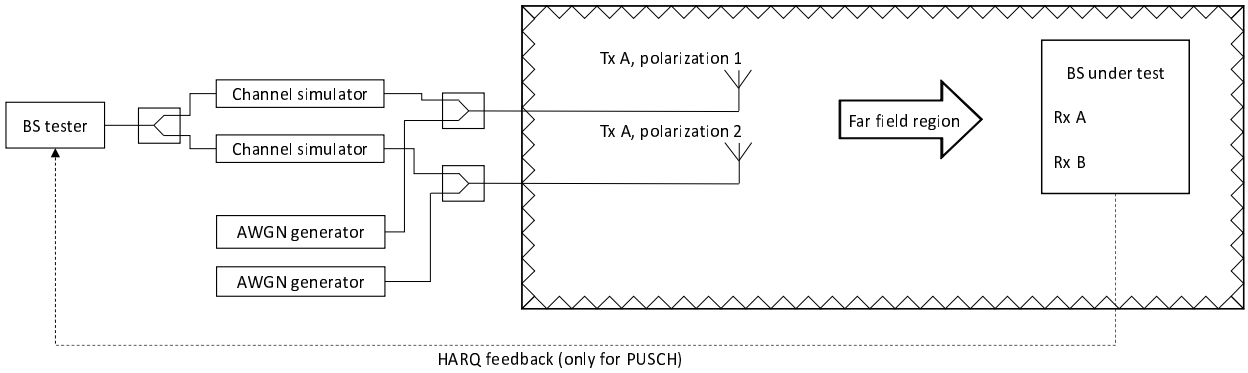

Figure 15.3-2: OTA test setup for multipath fading propagation conditions (equivalent to conducted 1TX – 2RX setup)

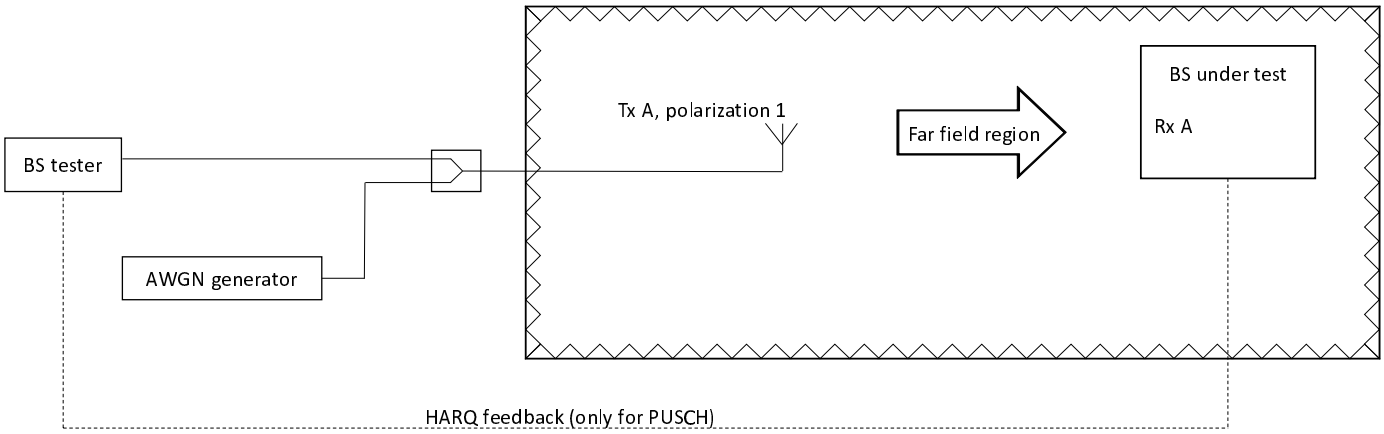

Figure 15.3-3: OTA test setup for static propagation conditions (equivalent to conducted 1TX – 1RX setup)

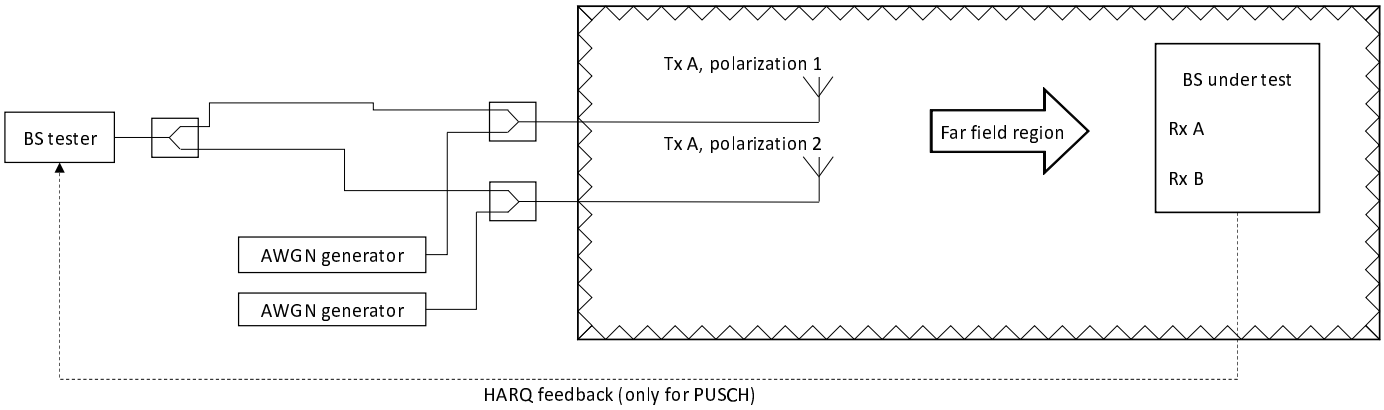

Figure 15.3-4: OTA test setup for static propagation conditions (equivalent to conducted 1TX – 2RX setup)

15.4 Indoor Anechoic Chamber

15.4.1 Measurement system description

The general IAC test setup for demodulation requirements is the same as that for OTA dynamic range, i.e. the same as described in clause 7.2.1. For more detailed test setup with the consideration of the channel simulators, AWGN noise generators as well as the polarization separation for 2RX setup, refer to the figures in clause 15.3.

15.4.2 Test procedure

15.4.2.1 Stage 1: Calibration

The calibration procedure for demodulation requirements is the same as that for OTA dynamic range, i.e. the same as described in clause 7.2.1 and depicted in figure 7.2.1-3. Calibration of the wanted signal and AWGN levels shall be performed.

15.4.2.2 Stage 2: BS measurement

The IAC measurement procedure is the same as those for the OTA sensitivity requirement in clause 10.2.2.2.2, except that step 5 is modified to measure applicable performance metric for the BS demodulation requirements (i.e. BER, or throughput, depending on the RAT and requirement).

The transmit signal power level may be set in the same manner as for OTA dynamic range; i.e. by considering the AWGN absolute levels referenced from appropriate conducted RAT-specific testing specifications, together with an adjustment $\Delta_{OTAREFSENS}$ to take into account BS *antenna gain* (path loss is taken account of by the calibration procedure). Examples of the AWGN power levels for the E-UTRA PUSCH requirements are listed in table 15.4.2.2-1 (AWGN levels for other requirements can be found in the conducted single RAT specifications).

Table 15.4.2.2-1: examples of the AWGN power level at the BS input for E-UTRA demodulation requirements

Channel bandwidth (MHz)	AWGN power level
1.4	-92.7 - $\Delta_{OTAREFSENS}$ dBm / 1.08 MHz
3	-88.7 - $\Delta_{OTAREFSENS}$ dBm / 2.7 MHz
5	-86.5 - $\Delta_{OTAREFSENS}$ dBm / 4.5 MHz
10	-83.5 - $\Delta_{OTAREFSENS}$ dBm / 9 MHz
15	-81.7 - $\Delta_{OTAREFSENS}$ dBm / 13.5 MHz
20	-80.4 - $\Delta_{OTAREFSENS}$ dBm / 18 MHz

15.4.3 MU value derivation, FR1

The BS demodulation requirements consist of a wanted signal and AWGN (potentially with fading modelling and additional interfering signals). In the conducted test setup, the received AWGN level is well above the noise floor, and so the SNR experienced at the BS receiver is dependent on the transmitter SNR/SINR (in case of E-UTRA) or E_b/N_0 (in case of UTRA).

Small variations in the received power level due to additional uncertainties in the OTA measurement chamber will not impact the receiver SNR, and hence uncertainties due to OTA will not impact the demodulation requirement MU. The MU can be considered to depend on the TX SNR/SINR (in case of E-UTRA) or on the TX $_b/N_0$ (in case of UTRA) and, where applicable the fading channel generation uncertainty, in the same manner as for the conducted requirements.

Thus, the MU for OTA demodulation requirements is the same as the MU for conducted demodulation requirements, as derived in RAT-specific conducted testing specifications:

- TS 25.141 [2] for UTRA FDD
- TS 36.141 [3] for E-UTRA
- TS 38.141-1 [5] for NR

The resulting test requirements for OTA BS can be reused from the above conducted test specifications, as long as the SNR/SINR (in case of E-UTRA and NR) or the TX $_b/N_0$ (in case of UTRA) at the BS receiver is not impacted by the noise floor due to the OTA test chamber path loss.

15.5 Compact Antenna Test Range

15.5.1 Measurement system description

The general CATR test setup for demodulation requirements is the same as that for OTA dynamic range, i.e. the same as described in clause 7.3.1 and the measurement system setup for OTA dynamic range depicted on figure 7.3.1-3. For more detailed test setup with the consideration of the channel simulators, AWGN noise generators as well as the polarization separation for 2RX setup, refer to the figures in clause 15.3.

15.5.2 Test procedure

15.5.2.1 Stage 1: Calibration

The calibration procedure for demodulation requirements is the same as that for OTA dynamic range, as described in clause 8.3 and depicted on figure 7.3.1-3. Calibration of the wanted signal and AWGN levels shall be performed.

15.5.2.2 Stage 2: BS measurement

The CATR measurement procedure is the same as those for the OTA dynamic range requirement in clause 10.4.3.2.2, except that step 4 is modified to measure applicable performance metric for the BS demodulation requirements (i.e. BER, or throughput, depending on the RAT and requirement).

The transmit signal power level may be set in the same manner as described in clause 15.4.2.2 (i.e. BS demodulation requirements in IAC).

15.5.3 MU value derivation, FR1

The MU for OTA demodulation requirements is the same as for conducted demodulation requirements for the same reasons as applicable for the indoor anechoic chamber, described in clause 15.4.3.

15.6 Maximum accepted test system uncertainty

Measurement Uncertainties for the OTA BS demodulation requirements are the same as for the conducted requirements.

For maximum accepted OTA test system uncertainty values for the OTA demodulation requirements, refer to the following RAT-specific specifications:

- For UTRA demodulation requirements refer to TS 25.141 [2], clause 4.1.4.
- For E-UTRA demodulation requirements, refer to TS 36.141 [3], clause 4.1.2.3.
- For NR demodulation requirements, refer to TS 38.141-2 [6], clause 4.1.2.4.

15.7 Test Tolerance for OTA demodulation requirements

Test Tolerance values for the OTA BS demodulation requirements are the same as for the conducted requirements.

For Test Tolerance values used for the OTA demodulation requirements derivation, refer to the following RAT-specific specifications:

- For UTRA demodulation requirements refer to TS 25.141 [2], clause 4.2.3.
- For E-UTRA demodulation requirements, refer to TS 36.141 [3], Annex G, clause G.3.
- For NR demodulation requirements, refer to TS 38.141-2 [6], Annex C, clause C.3.

16 EMC requirements

16.1 BS ports for the EMC purposes

The OTA AAS BS architecture does not have a conducted interface and so the antennas cannot be disconnected. This means that the conducted methods where the *EMC antenna port*s are terminated are no longer be possible and hence new methods for EMC testing are needed.

Figure 8.1-1 shows the prime difference in architecture from an EMC view point when comparing the ports on a conventional non-AAS BS to the ports on an AAS BS.

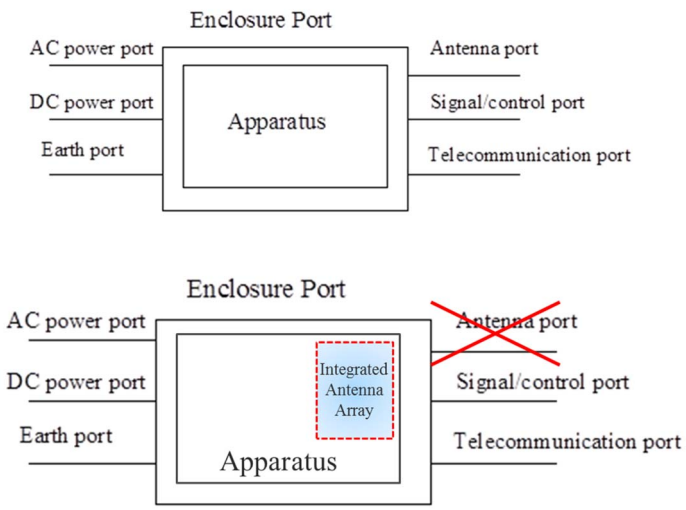

Figure 8.1-1: Comparison between BS architectures for EMC testing

Since the *antenna array* for the OTA AAS BS is integrated within the BS, the transmissions from the BS within the test chamber have *antenna gain* included in them.

Figure 8.1-2 illustrates the status of *EMC antenna port*s during EMC testing where it is noted that the ports are connected to a terminating load and the *hybrid AAS BS* is then set to transmit at full power.

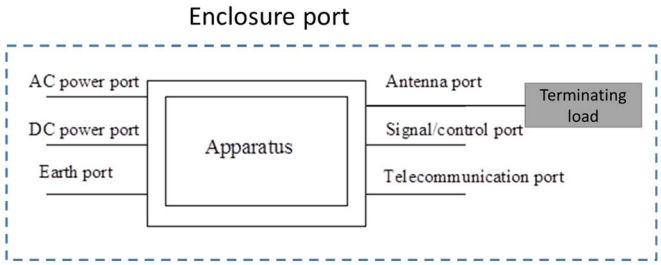

Figure 8.1-2: *EMC Antenna port* status during EMC testing

16.2 Field strength in EMC chamber

16.2.1 General

This clause provides an example estimation of field strength within the EMC chamber. Assuming free space propagation loss in an anechoic chamber, the path loss can be calculated as:

$$L = G_t G_r \left(\frac{\lambda}{4\pi R} \right)^2,$$

where Gt and Gr are the *antenna gain*s (with respect to an isotropic radiator) of the transmitting and receiving antennas respectively, λ is the wavelength, and R is the distance between the TX and RX.

Assuming a 0dBi *antenna gain* for the TX and RX, the isotropic free space path loss is plotted in figure 8.3.1-1 for 30, 1000, 2000, 4000, 6000 and 12000 MHz.

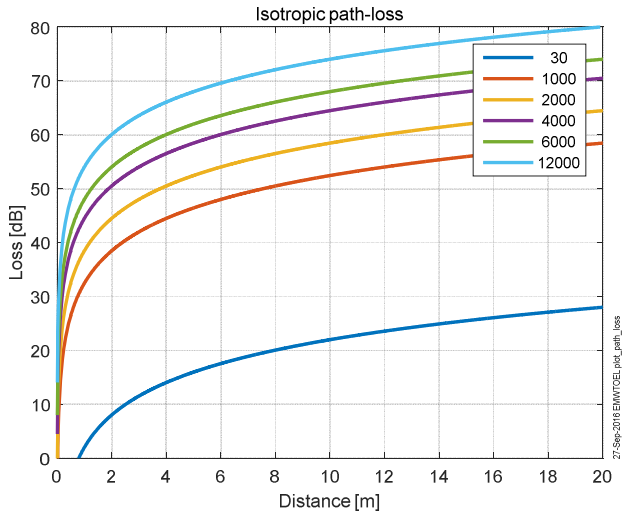

Figure 16.2.1-1: Free-space path loss, assuming G_t=G_r=0 dBi

It can be noted that for a typical distance between the BS and the probe antenna within the chamber, (e.g. 5 meters), the path loss at 2 GHz is more than 50 dB. However, if the BS has an integrated antenna which has gain, and the measurement probe antenna also has gain the total loss between the BS and the measurement equipment may drop. For example, a BS with TX *antenna gain* = 10 dBi and assuming 10 dBi *antenna gain* for the probe antenna, the coupling loss at 5 meters is roughly 30 dB, i.e. 20 dB lower than the coupling loss assuming 0 dBi *antenna gain*s. With this observation, and the fact the AAS BS is transmitting and connected to its integrated antenna, it can be contemplated that an AAS BS leads to significantly increased field strength within the chamber compared to the usual EMC measurement scenario where the transmitters are connected to terminating loads. This increased field strength and associated received power from the measurement probe could potentially damage the test equipment.

16.2.2 Conversion between dBm to V/m

Since the field strength within the EMC chamber is expressed in terms of electric field strength (i.e. V/m), it is important to establish the intensity of electric field strength generated when transmitting at a certain power (dBm). This conversion exists in prior art and is explained in [20]. In summary, for a free space wave impedance of 377 ohm, the electric field (V/m) can be expressed as:

$$E = \sqrt{\frac{377 \cdot EIRP}{4 \cdot \pi \cdot R^2}}$$

Where R is the distance of BS from the interferer (during the immunity testing).

This formula provides us a way to calculate the field strength within the chamber.

16.3 Protection of measurement equipment

In order to protect the measurement device from the increased field strength levels within the EMC chamber during the spurious emission testing. Traditionally in EMC testing as the BS transmitters are working into a load the received signal from the EMC test antenna is at a low power level which can be fed directly into the measurement equipment. With the AAS BS testing as the transmitter units are radiating through the AAS BS antenna the transmit signal received

at the measurement device is of a high power. In order to protect the measurement device from this signal, the device needs to ensure additional attenuation by filtering out the wanted signal with a notch or band stop filter. Additionally, TX exclusion bands similar to those used in existing conducted spurious emissions requirements may need to be defined in certain areas to ensure that the increased field strength does not block/damage the measurement device.

The existing RAT-specific frequency boundary limits defined for out-of-band emissions by the SEM or OBUE requirements in TS 37.105 [14] is a sufficient boundary to limit exposure of the measurement's equipment receiver from the high field strengths of the wanted signal.

16.4 Emission requirements

In terms of transmitter spurious emission, two types of core requirements specified for AAS BS are relevant:

1. The RF spurious emission requirements specified in TS 37.105 [14] with different measurement bandwidths and spurious emission levels as detailed in SM.329 [15].

2. The EMC radiated emission requirements specified in TS 37.114 [17] with the same measurement bandwidths as the RF spurious emission requirements.

In terms of the applicability of the RF Radiated Spurious Emission (RF RSE) and EMC Radiated Emission (EMC RE) requirements in the OTA setup, according to the existing conducted requirements, these requirements apply from 30 MHz to 12.75 GHz with consideration of exceptions:

- Unwanted emissions: the RF RSE requirement apply at frequencies within the above specified frequency range with the exception of the UTRA spectrum emission mask (SEM) and E-UTRA operating band unwanted emissions (OBUE) ranges specified in single RAT and MSR specifications.

- Upper frequency: in order for the RF RSE requirement to comply with the SM.329 recommendation [15], for certain operating bands the upper limit of the spurious range is extended beyond 12.75 GHz to the limit of 5th harmonic (but not higher than 26 GHz). For more details on the upper limit setting in those cases, refer to SM.329 [15].

The applicability of EMC RE and RF RSE requirements is illustrated in figure 16.4-1 below

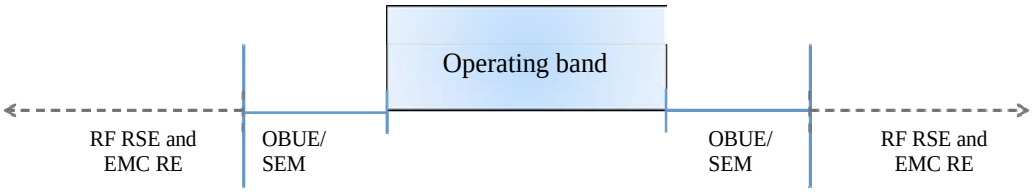

Figure 16.4-1: Applicability of spurious emission requirements

It is to be noted that these EMC RE requirements are applicable at the enclosure port and the *EMC antenna port* is connected to a terminating load while the AAS BS is transmitting at full power. The EMC RE are then tested in this setup to make sure that the requirements are fulfilled.

For the OTA AAS BS architecture that does have the possibility of disconnecting the composite antenna, the *EMC antenna port*s can no longer be connected to a terminating load. This means that the RF RSE and EMC RE requirements cannot be differentiated any needs to be considered as single OTA requirement specified at the enclosure of the BS. The single requirement contains a RF RSE component and an EMC RE component as shown in figure 16.4-1 and the total emission requirement is as specified in the SM.329 [15] recommendation.

Mechanism to specify the regional and additional co-existence requirements is not covered by the present release of this technical report.

16.5 Radiated immunity requirements

16.5.1 General

When performing EMC RI tests of an OTA AAS BS or *BS type 1-O*, due to lack of the antenna connectors a higher power level may, for certain test scenarios, enter the RX of the BS, while for a *hybrid AAS* BS the antenna connectors would be terminated during test preventing this to happen. This may lead to the receiver of the OTA AAS BS or *BS type 1-O* being inoperable (in case the RF blocking requirements are not met). To avoid the OTA AAS BS or *BS type 1-O* receiver being inoperable during the EMC RI test, protection mechanisms need to be employed for BS RX during the RI testing.

NOTE: Within Rel-15 timeframe, there were no EMC Radiated Immunity requirement defined for FR2 and *BS type 2-O*.

16.5.2 Measurement set-up for testing radiated immunity

In an EMC RI testing test setup for non-AAS BS products, the antenna connectors of the BS are terminated during test to prevent high power levels entering the RX of the BS. For the AAS BS architectures such as *BS type 1-O*, due to lack of the antenna connectors (called TAB connectors in case of AAS BS products), it is not possible to terminate TAB connectors and prevent disturbances affecting the RX chain. This may lead to the receiver of the *BS type 1-O* being inoperable (in case the RF blocking requirements are not met). To avoid the *BS type 1-O* receiver being inoperable during the EMC RI test, protection mechanisms need to be employed for BS RX during the RI testing.

A high level example of EMC RI test setup for an OTA AAS BS is illustrated in figure 16.5.2-1. The BS is placed in an anechoic chamber on top of a turn table. A range antenna or probe antenna generates the interfering RF electromagnetic field.

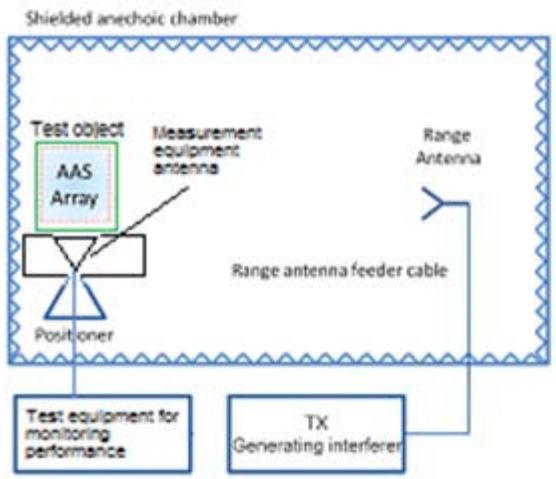

Figure 16.5.2-1: Example radiated immunity test setup for a *BS type 1-O*

An important difference of the EMC radiated immunity test setup for a *BS type 1-O* as compared with testing of the BS equipped with the antenna connectors is the need for OTA performance parameter monitoring. During EMC RI test the BS is rotated horizontally in order to expose it to the interfering RF electromagnetic field from all directions in horizontal plane.

According to IEC 61000-4-3 [25], all testing of equipment shall be performed in a configuration as close as possible to actual installation conditions. In order to allow electromagnetic susceptibility testing of the maximum surface for *BS type 1-O*, the BS shall be mounted using rack (or pole) mount, if possible.

16.5.2 Alternatives to protect *BS type 1-O* during RI test

3GPP has agreed on the use of two mechanisms to protect the BS during RI testing:

- Exclusion bands, or

- Spatial exclusion.

The combined use of these two alternatives is reflected in both AAS BS EMC specification TS 37.114 [17] and the NR BS EMC specification TS 38.113 [18].

16.5.2.1 Exclusion bands

Exclusion bands were considered as a mechanism to protect the receiver from potential damage/undue stress during the RI test of the non-AAS BS products so far, where the exclusion bands represent a range of frequencies over which no tests are made.

During the discussion of Release 15, the need for widening the size of the exclusion bands in TS 37.113 [16], TS 37.114 [17] and TS 38.113 [18] has been recognized. The parameter proposed to get this extension was the boundary of the in-band and out-of-band region, represented by the maximum offset of the out-of-band boundary from the uplink operating band edge (i.e. Δf_{OOB}). The value of Δf_{OOB} was derived considering the width of the NR operating band and was agreed to be:

- 20 MHz, for operating bands narrower than 100 MHz, or
- 60 MHz, for operating bands wider than 100 MHz.

The above Δf_{OOB} values considered the use of spatial exclusion during the EMC RI testing.

Before the significant risk to over-dimension the Rx band filter for *BS type 1-O*, the need for using a value higher than Δf_{OOB} to calculate the exclusion bands size was agreed for the test case with no spatial exclusion being considered. In this case the exclusion band takes into account the width of the operating band as follows:

- 60 MHz, for operating bands narrower than 100 MHz, or
- 200 MHz, for operating bands wider than 100 MHz.

16.5.2.2 Spatial exclusion

According to IEC 61000-4-3 [19], the EMC Radiated Immunity test is performed with the generating antenna facing each side of the BS. When technically justified, some BS can be tested by exposing fewer faces to the generating antenna. For *BS type 1-O* the RI test need to be reduced to fewer angular incidences. This is to protect the BS receiver from being blocked due to received input power levels exceeding the OOB blocking limits during the RI testing. Referring to the IEC 61000-4-3 [19] guidance above, the angular incidence where the front of the *BS type 1-O* is facing the interferer range antenna needs to be omitted, as depicted in figure 16.7.2.2-1.

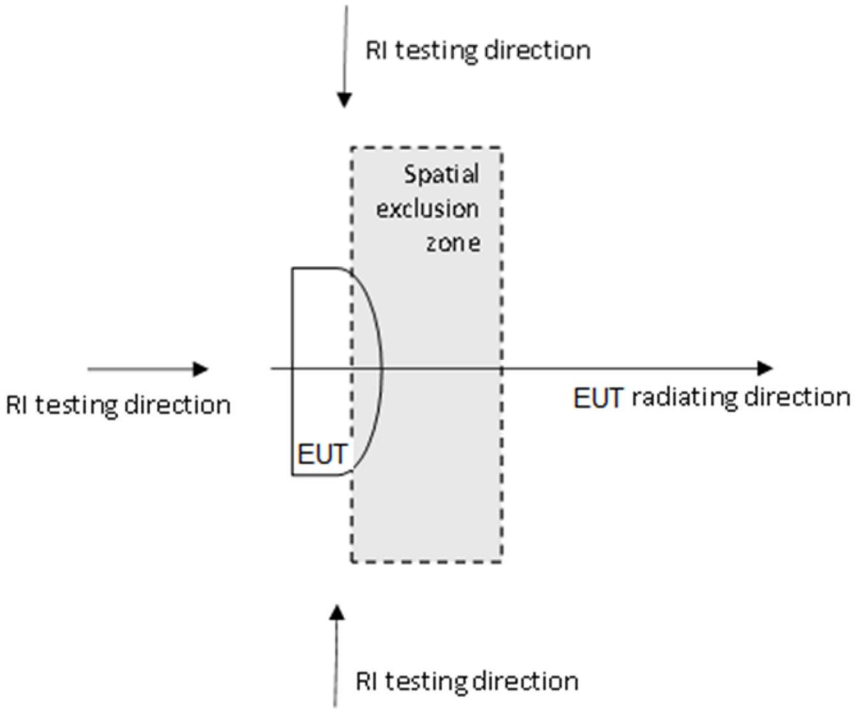

Figure 16.5.2.2-1: RI testing directions for *BS type 1-O* (horizontal plane depicted)

17 Measurement Uncertainty values summary

Table 17-1: TX Measurement Uncertainty values derivation – FR1

Requirement	Maximum OTA Test System uncertainty	Clause
Radiated transmit power	Normal condition: ±1.1 dB, f ≤ 3 GHz ±1.3 dB, 3 GHz < f ≤ 6 GHz	9.2.7
	Extreme condition: ±2.5 dB, f ≤ 3 GHz ±2.6 dB, 3 GHz < f ≤ 6 GHz	9.3.4
OTA base station output power	±1.4 dB, f ≤ 3 GHz ±1.5 dB, 3 GHz < f ≤ 6 GHz	11.2.7
OTA E-UTRA DL RS power	±1.3 dB, f ≤ 3 GHz ±1.5 dB, 3 GHz < f ≤ 6 GHz	9.4.6
OTA UTRA inner loop power control in the downlink	±0.1 dB	9.5.6
OTA UTRA power control dynamic range	±1.1 dB	9.5.6
OTA total power dynamic range	±0.3 dB UTRA ±0.4 dB E-UTRA & NR	9.5.6
OTA UTRA IPDL time mask	±0.7 dB	9..5.6
OTA RE power control dynamic range (NR)	N/A	
OTA transmitter OFF power	±3.4 dB, f ≤ 3 GHz ±3.6 dB, 3 GHz < f ≤ 6 GHz (NOTE 1)	13.2.3
OTA transmitter transient period	N/A	
OTA frequency error	±12 Hz	9.6.6
OTA modulation quality	±1 %	9.7.6
OTA time alignment error	±25 ns	9.8.5
OTA occupied bandwidth	±100 kHz, $BW_{Channel}$ 5 MHz, 10 MHz ±300 kHz, $BW_{Channel}$ 15 MHz, 20 MHz, 25 MHz, 30 MHz, 40 MHz, 50 MHz ±600 kHz, $BW_{Channel}$ 60 MHz, 70 MHz, 80 MHz, 90 MHz, 100 MHz	9.9.6
OTA ACLR/CACLR	f ≤ 3 GHz ±1 dB 3 GHz < f ≤ 6 GHz ±1.2 dB, BW ≤ 20 MHz ±1.2 dB, BW > 20 MHz Absolute power ±2.2 dB, f ≤ 3 GHz Absolute power ±2.7 dB, 3 GHz < f ≤ 6 GHz	11.3.7
OTA operating band unwanted emissions (E-UTRA, NR)	Absolute power ±1.8 dB, f ≤ 3 GHz Absolute power ±2 dB, 3 GHz < f ≤ 6 GHz	11.4.7
OTA SEM (UTRA only)	Absolute power ±1.8 dB, f ≤ 3 GHz Absolute power ±2 dB, 3 GHz < f ≤ 6 GHz	11.4.7
OTA transmitter spurious emissions, mandatory requirements	±2.3 dB, 30 MHz < f ≤ 6 GHz ±4.2 dB, 6 GHz < f ≤ 26 GHz	12.2.5
OTA transmitter spurious emissions, protection of BS receiver	±3.1 dB, f ≤ 3 GHz ±3.3 dB, 3 GHz < f ≤ 4.2 GHz ±3.4 dB, 4.2 GHz < f ≤ 6 GHz (NOTE 1)	13.3.3
OTA transmitter spurious emissions, additional spurious emissions requirements	±2.6 dB, f ≤ 3 GHz ±3.0 dB, 3 GHz < f ≤ 4.2 GHz ±3.5 dB, 4.2 GHz < f ≤ 6 GHz	12.4.3
OTA transmitter spurious emissions, co-location	±3.1 dB, f ≤ 3 GHz ±3.3 dB, 3 GHz < f ≤ 4.2 GHz ±3.4 dB, 4.2 GHz < f ≤ 6 GHz (NOTE)	13.3.3
OTA transmitter intermodulation	The value below applies only to the interfering signal and is unrelated to the measurement uncertainty of the tests (11.3 for ACLR, 11.4 for OBUE and 12.2 for TX spurious emissions) which have to be carried out in the presence of the interferer. ±3.2 dB, f ≤ 3 GHz ±3.4 dB, 3 GHz < f ≤ 4.2 GHz ±3.5 dB, 4.2 GHz < f ≤ 6 GHz (NOTE 1)	13.4.3

NOTE 1: Fulfilling the criteria for CLTA selection and placement in clause 6.4 is deemed sufficient for the test purposes. When these criteria are met, the measurement uncertainty related to the selection of the co-location test antenna and its alignment as specified in the appropriate measurement uncertainty budgets in this TR shall be used for evaluating the test system uncertainty.

NOTE 2: Test system uncertainty values are applicable for normal condition unless otherwise stated.

Table 17-2: Tx Measurement Uncertainty values derivation – FR2

Requirement	Maximum OTA Test System uncertainty	Clause
Radiated transmit power	Normal condition: ±1.7 dB (24.25 – 29.5 GHz) ±2.0 dB (37 – 43.5 GHz) ±2.2 dB (43.5 – 48.2 GHz)	9.2.7
	Extreme condition: ±3.1 dB (24.25 – 29.5 GHz) ±3.3 dB (37 – 43.5 GHz) ±3.5 dB (43.5 – 48.2 GHz)	9.3.4
OTA base station output power	±2.1 dB (24.25 – 29.5 GHz) ±2.4 dB (37 – 43.5 GHz) ±2.6 dB (43.5 – 48.2 GHz)	11.2.7
OTA RE power control dynamic range	N/A	
OTA total power dynamic range	±0.4 dB	9.5.6
OTA transmitter OFF power	±2.9 dB (24.25 – 29.5 GHz) ±3.3 dB (37 – 43.5 GHz) ±3.6 dB (43.5 – 48.2 GHz)	9.10.3
OTA transmitter transient period	N/A	
OTA frequency error	±12 Hz	9.6.6
OTA modulation quality	1%	9.7.6
OTA time alignment error	±25 ns	9.8.5
OTA occupied bandwidth	600 kHz	9.9.6
OTA ACLR	Relative ACLR: ±2.3 dB (24.25 – 29.5 GHz) ±2.6 dB (37 – 43.5 GHz) ±2.8 dB (43.5 – 48.2 GHz) Absolute ACLR: ±2.7 dB (24.25 – 29.5 GHz) ±2.7 dB (37 – 43.5 GHz) ±2.9 dB (43.5 – 48.2 GHz)	11.3.7
OTA operating band unwanted emissions	±2.7 dB (24.25 – 29.5 GHz) ±2.7 dB (37 – 43.5 GHz) ±2.9 dB (43.5 – 48.2 GHz)	11.4.7
OTA transmitter spurious emissions, mandatory requirements	±2.3 dB, 30 MHz ≤ f ≤ 6 GHz ±2.7 dB, 6 GHz < f ≤ 43.5 GHz ±5.0 dB, 43.5 GHz < f ≤ 60 GHz	12.2.5
OTA transmitter spurious emissions, additional requirements	±2.3 dB, 30 MHz ≤ f ≤ 6 GHz ±2.7 dB, 6 GHz < f ≤ 43.5 GHz ±5.0 dB, 43.5 GHz < f ≤ 60 GHz	12.2.5
NOTE: Test system uncertainty values are applicable for normal condition unless otherwise stated.		

Table 17-3: RX Measurement Uncertainty values derivation – FR1

Requirement	Maximum OTA Test System uncertainty	Clause
OTA sensitivity	±1.3 dB, f ≤ 3 GHz ±1.4 dB, 3 GHz < f ≤ 4.2 GHz ±1.6 dB, 4.2 GHz < f ≤ 6 GHz	10.2.7
OTA reference sensitivity level	±1.3 dB, f ≤ 3 GHz ±1.4 dB, 3 GHz < f ≤ 4.2 GHz ±1.6 dB, 4.2 GHz < f ≤ 6 GHz	10.3
OTA dynamic range	±0.3 dB	10.4.4
OTA adjacent channel selectivity	±1.7 dB, f ≤ 3 GHz ±2.1 dB, 3 GHz < f ≤ 4.2 GHz ±2.4 dB, 4.2 GHz < f ≤ 6 GHz	10.5.4
In-band blocking (General)	±1.9 dB, f ≤ 3 GHz ±2.2 dB, 3 GHz < f ≤ 4.2 GHz ±2.5 dB, 4.2 GHz < f ≤ 6 GHz	10.5.4
In-band blocking (Narrowband)	±1.7 dB, f ≤ 3 GHz ±2.1 dB, 3 GHz < f ≤ 4.2 GHz ±2.4 dB, 4.2 GHz < f ≤ 6 GHz	10.5.4
OTA out-of-band blocking (General)	f_{wanted} ≤ 3 GHz: ±2.0 dB, $f_{interferer}$ ≤ 3 GHz ±2.1 dB, 3 GHz < $f_{interferer}$ ≤ 6 GHz ±3.5 dB, 6 GHz < $f_{interferer}$ ≤ 12.75 GHz 3 GHz < f_{wanted} ≤ 4.2 GHz: ±2.0 dB, $f_{interferer}$ ≤ 3 GHz ±2.1 dB, 3 GHz < $f_{interferer}$ ≤ 6 GHz ±3.6 dB, 6 GHz < $f_{interferer}$ ≤ 12.75 GHz 4.2 GHz < f_{wanted} ≤ 6 GHz: ±2.2 dB, $f_{interferer}$ ≤ 3 GHz ±2.3 dB, 3 GHz < $f_{interferer}$ ≤ 6 GHz ±3.6 dB, 6 GHz < $f_{interferer}$ ≤ 12.75 GHz	14.3
OTA out-of-band blocking (Co-location) (NOTE 1)	f_{wanted} ≤ 3 GHz: ±3.4 dB, $f_{interferer}$ ≤ 3 GHz ±3.5 dB, 3 GHz < $f_{interferer}$ ≤ 4.2 GHz ±3.7 dB, 4.2 GHz < $f_{interferer}$ ≤ 6 GHz 3 GHz < f_{wanted} ≤ 4.2 GHz: ±3.5 dB, $f_{interferer}$ ≤ 3 GHz ±3.6 dB, 3 GHz < $f_{interferer}$ ≤ 4.2 GHz ±3.7 dB, 4.2 GHz < $f_{interferer}$ ≤ 6 GHz 4.2 GHz < f_{wanted} ≤ 6 GHz: ±3.6 dB, $f_{interferer}$ ≤ 3 GHz ±3.7 dB, 3 GHz < $f_{interferer}$ ≤ 4.2 GHz ±3.8 dB, 4.2 GHz < $f_{interferer}$ ≤ 6 GHz	13.5.4
OTA receiver spurious emissions	±2.5 dB, 30 MHz ≤ f ≤ 6 GHz ±4.2 dB, 6 GHz < f ≤ 26 GHz	12.3.3
OTA receiver intermodulation	±2.0 dB, f ≤ 3 GHz ±2.6 dB, 3 GHz < f ≤ 4.2 GHz ±3.2 dB, 4.2 GHz < f ≤ 6 GHz	10.6.4
OTA in-channel selectivity	±1.7 dB, f ≤ 3 GHz ±2.1 dB, 3 GHz < f ≤ 4.2 GHz ±2.4 dB, 4.2 GHz < f ≤ 6 GHz	10.7.4

NOTE 1: Fulfilling the criteria for CLTA selection and placement in clause 6.4 is deemed sufficient for the test purposes. When these criteria are met, the measurement uncertainty related to the selection of the co-location test antenna and its alignment as specified in the appropriate measurement uncertainty budget in this TR shall be used for evaluating the test system uncertainty.

NOTE 2: Test system uncertainty values are applicable for normal condition unless otherwise stated.

Table 17-4: RX Measurement Uncertainty values derivation – FR2

Requirement	Maximum OTA Test System uncertainty	Clause
OTA reference sensitivity level	±2.4 dB, 24.25 GHz < f ≤ 29.5 GHz ±2.4 dB, 37 GHz < f ≤ 43.5 GHz ±3.5 dB, 43.5 GHz < f ≤ 48.2 GHz	10.2.7
OTA adjacent channel selectivity	±3.4 dB, 24.25 GHz < f ≤ 29.5 GHz ±3.4 dB, 37 GHz < f ≤ 43.5 GHz ±5.1 dB, 43.5 GHz < f ≤ 48.2 GHz	10.5.4
OTA in-band blocking (General)	±3.4 dB, 24.25 GHz < f ≤ 29.5 GHz ±3.4 dB, 37 GHz < f ≤ 43.5 GHz ±5.1 dB, 43.5 GHz < f ≤ 48.2 GHz	10.5.4
OTA out-of-band blocking	±3.6 dB, 24.25 GHz < f ≤ 29.5 GHz ±3.6 dB, 37 GHz < f ≤ 43.5 GHz ±4.5 dB, 43.5 GHz < f ≤ 48.2 GHz	14.3
OTA receiver spurious emissions	±2.5 dB, 30 MHz ≤ f ≤ 6 GHz ±2.7 dB, 6 GHz < f ≤ 43.5 GHz ±5.0 dB, 43.5 GHz < f ≤ 60 GHz	12.3.3
OTA receiver intermodulation	±3.9 dB, 24.25 GHz < f ≤ 29.5 GHz ±3.9 dB, 37 GHz < f ≤ 43.5 GHz ±5.4 dB, 43.5 GHz < f ≤ 48.2 GHz	10.6.4
OTA in-channel selectivity	±3.4 dB, 24.25 GHz < f ≤ 29.5 GHz ±3.4 dB, 37 GHz < f ≤ 43.5 GHz ±5.1 dB, 43.5 GHz < f ≤ 48.2 GHz	10.7.4
NOTE: Test System uncertainty values are applicable for normal condition unless otherwise stated.		

18 Test Tolerance values summary

Considering the methodology described in clause 5.1, Test Tolerance values for all the considered requirements are captured in this clause, based on the maximum accepted test system uncertainty values derived for each specific requirement. Frequency range specific Test Tolerance values are captured in table 18-1.

Table 18-1: Test Tolerance values derivation, TX FR1

Requirement	Test Tolerance (TT_{OTA})	Clause
Radiated transmit power	Normal condition: ±1.1 dB, f ≤ 3 GHz ±1.3 dB, 3 GHz < f ≤ 6 GHz	9.2.8
	Extreme condition: 2.5 dB, f ≤ 3 GHz 2.6 dB, 3 GHz < f ≤ 6 GHz	9.3.5
OTA base station output power	1.4 dB, f ≤ 3 GHz 1.5 dB, 3 GHz < f ≤ 6 GHz	11.2.8
OTA E-UTRA DL RS power	1.3 dB, f ≤ 3 GHz 1.5 dB, 3 GHz < f ≤ 6 GHz	9.4.7
OTA UTRA inner loop power control in the downlink	0.1 dB	9.5.7
OTA UTRA power control dynamic range	1.1 dB	9.5.7
OTA total power dynamic range	0.3 dB UTRA 0.4 dB E-UTRA & NR	9.5.7
OTA UTRA IPDL time mask	0.7 dB	9.5.7
OTA RE power control dynamic range (NR)	N/A	
OTA transmitter OFF power	3.4 dB, f ≤ 3 GHz 3.6 dB, 3 GHz < f ≤ 6 GHz (NOTE)	13.2.4
OTA transmitter transient period	N/A	
OTA frequency error	12 Hz	9.6.7
OTA modulation quality	1 %	9.7.7
OTA time alignment error	25 ns	9.8.6
OTA occupied bandwidth	0 Hz	9.9.7
OTA ACLR/CACLR	Relative: 1.0 dB, f ≤ 3 GHz 1.2 dB, 3 GHz < f ≤ 6 GHz Absolute: 0 dB	11.3.8
OTA operating band unwanted emissions (E-UTRA, NR)	Offsets < 10 MHz 1.8 dB, f ≤ 3 GHz 2 dB, 3 GHz < f ≤ 6 GHz Offsets ≥ 10 MHz 0 dB	11.4.8
SEM (UTRA only)	1.8 dB, f ≤ 3 GHz 2.0 dB, 3 GHz < f ≤ 4.2 GHz	11.4.8
OTA transmitter spurious emissions, mandatory requirements	0 dB	12.2.6
OTA transmitter spurious emissions, protection of BS receiver	3.1 dB, f ≤ 3 GHz 3.3 dB, 3 GHz < f ≤ 4.2 GHz 3.4 dB, 4.2 GHz < f ≤ 6 GHz	13.3.4
OTA transmitter spurious emissions, additional spurious emissions requirements	2.6 dB, f ≤ 3 GHz 3.0 dB, 3 GHz < f ≤ 4.2 GHz 3.5 dB, 4.2 GHz < f ≤ 6 GHz For co-existence with PHS and public safety bands. 0 dB	12.4.4
OTA transmitter spurious emissions, co-location	3.1 dB, f ≤ 3 GHz 3.3 dB, 3 GHz < f ≤ 4.2 GHz 3.4 dB, 4.2 GHz < f ≤ 6 GHz	13.3.4
OTA transmitter intermodulation	0 dB	13.4.4
NOTE: TTOTA values are applicable for normal condition unless otherwise stated.		

Table 18-2: Test Tolerance values derivation, TX FR2

Requirement	Test Tolerance (TT_{OTA})	Clause
Radiated transmit power	Normal condition: 1.7 dB (24.25 – 29.5 GHz) 2.0 dB (37 – 43.5 GHz) 2.2 dB (43.5 – 48.2 GHz)	9.2.8
	Extreme condition: 3.1 dB (24.25 – 29.5 GHz) 3.3 dB (37 – 43.5 GHz) 3.5 dB (43.5 – 48.2 GHz)	9.3.5
OTA base station output power	2.1 dB (24.25 – 29.5 GHz) 2.4 dB (37 – 43.5 GHz) 2.6 dB (43.5 – 48.2 GHz)	11.2.8
OTA total power dynamic range	0.4 dB	9.5.6
OTA transmitter OFF power	2.9 dB (24.25 – 29.5 GHz) 3.3 dB (37 – 43.5 GHz) 3.6 dB (43.5 – 48.2 GHz)	9.10.4
OTA transmitter transient period	N/A	
OTA frequency error	12 Hz	9.6.6
OTA modulation quality	1%	9.7.6
OTA time alignment error	25 ns	9.8.6
OTA occupied bandwidth	0 Hz	9.9.6
OTA ACLR	Relative ACLR: 2.3 dB (24.25 – 29.5 GHz) 2.6 dB (37 – 43.5 GHz) 2.8 dB (43.5 – 48.2 GHz) Absolute ACLR: 2.7 dB (24.25 – 29.5 GHz) 2.7 dB (37 – 43.5 GHz) 2.9 dB (43.5 – 48.2 GHz)	11.3.8
OTA operating band unwanted emissions	2.7 dB (24.25 – 29.5 GHz) 2.7 dB (37 – 43.5 GHz) 2.9 dB (43.5 – 48.2 GHz) (NOTE 2)	11.4.8
OTA transmitter spurious emissions, mandatory requirements	0 dB	12.2.5
OTA transmitter spurious emissions, additional requirements	NOTE 2	
NOTE 1: TTOTA values are applicable for normal condition unless otherwise stated. NOTE 2: There may be additional regional regulatory requirements being applicable, tightening the TTOTA values to 0 dB, e.g. for co-existence with Earth Exploration Satellite Service. For more details refer to e.g. TS 38.141-2 [6].		

Table 18-3: Test Tolerance values derivation, RX FR1

Requirement	Test Tolerance (TT_{OTA})	Clause
OTA sensitivity	1.3 dB, f ≤ 3 GHz 1.4 dB, 3 GHz < f ≤ 4.2 GHz 1.6 dB, 4.2 GHz < f ≤ 6 GHz	10.2.8
OTA reference sensitivity level	1.3 dB, f ≤ 3 GHz 1.4 dB, 3 GHz < f ≤ 4.2 GHz 1.6 dB, 4.2 GHz < f ≤ 6 GHz	10.3
OTA dynamic range	0.3 dB	10.4.5
OTA adjacent channel selectivity	0 dB	10.5.5
OTA in-band blocking (General)	0 dB	10.5.5
OTA in-band blocking (Narrowband)	0 dB	10.5.5
OTA out-of-band blocking (General)	0 dB	14.4
OTA out-of-band blocking (Co-location)	0 dB	13.5.4
OTA receiver spurious emissions	0 dB (NOTE 2)	12.3.4
OTA receiver intermodulation	0 dB	10.6.5
OTA in-channel selectivity	1.7 dB, f ≤ 3 GHz 2.1 dB, 3 GHz < f ≤ 4.2 GHz 2.4 dB, 4.2 GHz < f ≤ 6 GHz	10.7.4
NOTE 1: TTOTA values are applicable for normal condition unless otherwise stated. NOTE 2: From December 2019, the regulation around receiver spurious emissions has been clarified in ERC recommendation 74-01 [25] and the requirement has been updated. Since then OTA RX spurious emissions is a regulatory requirement with TT = 0 (as opoosed to the previous agreement with TT = MU).		

Table 18-4: Test Tolerance values derivation, RX FR2

Requirement	Test Tolerance (TT_{OTA})	Clause
OTA reference sensitivity level	2.4 dB, 24.25 GHz < f ≤ 29.5 GHz 2.4 dB, 37 GHz < f ≤ 43.5 GHz 3.5 dB, 43.5 GHz < f ≤ 48.2 GHz	10.2.8
OTA adjacent channel selectivity	0 dB	10.5.5
OTA in-band blocking (General)	0 dB	10.5.5
OTA out-of-band blocking	0 dB	14.4
OTA receiver spurious emissions	0 dB	12.3.4
OTA receiver intermodulation	0 dB	10.6.5
OTA in-channel selectivity	3.4 dB, 24.25 GHz < f ≤ 29.5 GHz 3.4 dB, 37 GHz < f ≤ 43.5 GHz 5.1 dB, 43.5 GHz < f ≤ 48.2 GHz	10.7.5
NOTE: TT_{OTA} values are applicable for normal condition unless otherwise stated.		

Annex A (informative): Radiated TX measurement error contribution descriptions

A.1 Indoor Anechoic Chamber

This clause describes measurement uncertainty contributors for TX measurements in Indoor Anechoic Chamber.

NOTE 1: Several MU contributor descriptions are defined in a way combining both BS for the measurement stage and calibration/reference antenna for calibration stage, e.g. for A1-4 this contribution is denoted as A1-4a for polarization mismatch between the BS and the receiving antenna, and as A1-4b for polarization mismatch between the reference antenna and the receiving antenna.

A1-1 Positioning misalignment between the BS and the reference antenna

This contribution originates from the misalignment of the manufacturer declared coordinate system reference point of the BS and the phase centre of the reference antenna. The uncertainty makes the space propagation loss between the BS and the receiving antenna at the BS measurement stage (i.e. Stage 2) different from the space propagation loss between the reference antenna and the receiving antenna at the calibration stage (i.e. Stage 1).

A1-2 Pointing misalignment between the BS and the receiving antenna

This contribution originates from the misalignment of the testing direction and the *beam peak direction* of the receiving antenna due to imperfect rotation operation. The pointing misalignment may happen in both azimuth and vertical directions and the effect of the misalignment depends highly on the beamwidth of the beam under test. The same level of misalignment results in a larger measurement error for a narrower beam.

A1-3 Quality of quiet zone (normal test conditions)

This contribution originates from a reflectivity level of an anechoic chamber. The reflectivity level is determined from the average standard deviation of the electric field in the quiet zone. By repeating a free space VSWR measurement in 15° grid in elevation and azimuth, 264 standard deviation values in both polarizations are determined. From these values an average standard deviation of electric field in the quiet zone can be calculated from the equation:

$$\overline{S_{freq}} = \frac{\frac{\pi}{2NM}\sum_{n=1}^{N}\sum_{m=1}^{M} s_{n,m,hor}\sin(\theta_n) + \frac{\pi}{2NM}\sum_{n=1}^{N}\sum_{m=1}^{M} s_{n,m,ver}\sin(\theta_n)}{2}$$

Where:

N is the number of angular intervals in elevation,

M is the number of angular intervals in azimuth, and

θ_n is elevation of single measurement $s_{n,m,pol}$.

If an efficiency calibration with omni-directional calibration antenna is performed, the effect of reflectivity level decreases in Stage 1 (i.e. calibration measurement) and $\overline{S_{freq}}$ may be divided by factor 2. This is due to correcting impact of data averaging in this type of calibration. Efficiency calibration done with sampling step ≤ 30°, can be considered to have at least four independent samples. $\overline{S_{freq}}$ may be divided by factor 2 also in Stage 2 (i.e. BS measurement) for the same reason.

It's likely that asymmetry of the field probe will have a very small impact on this measurement uncertainty contributor, however, an upper bound to probe symmetry should be considered.

NOTE 2: This MU contributor is defined for normal test conditions. MU contributor for the quality of QZ in extreme test conditions is defined in A1-17.

A1-4 Polarization mismatch between the BS (a) / reference antenna (b) and the receiving antenna

This contribution originates from the misaligned polarization between the BS/reference antenna and the receiving antenna.

A1-5 Mutual coupling between the BS(a) / reference antenna (b) and the receiving antenna

This contribution originates from mutual coupling between the BS/reference antenna and the receiving antenna. Mutual coupling degrades not just the antenna efficiency, i.e. the EIRP value, but it can alter the antenna's *radiation pattern* as well. For indoor anechoic chamber, usually the spacing between the BS/reference antenna and the receiving antennas is large enough so that the level of mutual coupling might be negligible.

A1-6 Phase curvature

This contribution originates from the finite far field measurement distance, which causes phase curvature across the antenna of BS/reference antenna.

A1-7 Impedance mismatch in the receiving chain

This contribution originates from multiple reflections between the receiving antenna and the power measurement equipment. The multiple reflections can produce an overall reflection that depends not only upon the individual reflections of each part but their reflective interactions as well. The combination loss by the overall reflection can be higher or lower than individual loss by multiple reflections. The combination loss is called the mismatch error and leads to the measurement uncertainty.

A1-8 Random uncertainty

The random uncertainty characterizes the undefined and miscellaneous effects which cannot be forecasted. One can estimate this type of uncertainty with a repeatability test by making a series of repeated measurement with a reference BS without changing anything in the measurement set-up.

A1-9 Impedance mismatch between the receiving antenna and the network analyzer

This contribution originates from multiple reflections between the receiving antenna and the network analyzer. After appropriate calibration, the network analyzer may not introduce impedance mismatch error, but the error still happens between the receiving antenna feed cable and the receiving antenna.

A1-10 Positioning and pointing misalignment between the reference antenna and the receiving antenna

This contribution originates from reference antenna alignment and pointing error. In this measurement if the maximum gain directions of the reference antenna and the receiving antenna are aligned to each other, this contribution can be considered negligible and therefore set to zero.

A1-11 Impedance mismatch between the reference antenna and the network analyzer

This contribution originates from multiple reflections between the reference antenna and the network analyzer. After appropriate calibration, the network analyzer may not introduce impedance mismatch error, but the error still happens between the reference antenna feed cable and the reference antenna.

A1-12 Influence of the reference antenna feed cable

In the calibration Stage 1, the influence of the calibration antenna feed cable is assessed by measurements. A measurement for calibration may be repeated with a reasonably differing routing of the feed cable. Largest difference among the results is entered to the uncertainty budget with a rectangular distribution.

A1-13 Reference antenna feed cable loss measurement uncertainty

Before performing the calibration, the reference antenna feed cable loss have to be measured. The measurement can be done with a network analyzer to measure its S_{21} and uncertainty is introduced.

A1-14 Influence of the receiving antenna feed cable

If the probe antenna is directional (i.e. peak gain >+5 dBi, e.g. horn, LPDA, etc.) and the same probe antenna cable configuration is used for both stages, the uncertainty is considered systematic and constant ➔ 0.00 dB value.

In other cases a technical study should be done.

A1-15 Uncertainty of the absolute gain of the receiving antenna

The uncertainty appears in both stages and it is thus considered systematic and constant ➔ 0.00 dB value.

A1-16 Frequency flatness of test system

This uncertainty contribution to account for the frequency interpolation error caused by a finite frequency resolution during the calibration stage.

A1-17 Quality of quiet zone (extreme test conditions)

This contribution is related to the ambient quality of the quiet zone for normal test conditions (i.e. A1-3) which originates from a reflectivity level of an anechoic chamber. The reflectivity level is determined from the average standard deviation of the electric field in the quiet zone. As the environmental enclosure is larger than the BS and the material of the environmental chamber may cause some reflection and refraction the quite zone flatness will be effected. The quality of the quiet zone for the extreme test is therefore larger that for the ambient due to the environmental enclosures effect.

NOTE 3: This MU contributor is defined for extreme test conditions. MU contributor for the quality of QZ in normal test conditions is defined in A1-3.

A1-18 Wet radome loss variation

The environmental chamber radome will be an ineffective thermal isolator and will have extreme temperatures on the inside and the OTA chamber ambient temperature on the outside. In such conditions condensation is inevitable. This uncertainty is due to the variation in the radome loss due to condensation on the environmental chamber radome.

A1-19 Radome loss variation

The environmental chamber radome will affect the path between the BS and the test antenna due to both its insertion loss and also reflection and refraction from the materials surface. The loss is dependent on the material as well as its proximity to the BS. The uncertainty is the residual uncertainly of the total loss after calibration.

A1-20 Change in absorber behaviour

The environmental chamber will contain RF absorptive material to prevent reflections within the chamber. This RF absorptive material will be subjected to the extreme temperatures inside the environmental chamber and hence its properties will change. This uncertainty accounts for the effect of that change in behavior.

A1-21 Uncertainty of the LNA (FR2 only)

To maintain a low noise figure for the measurement system (possibly considering the addition of a down conversion mixer for high frequencies) and LNA may be required. The variation in the gain of the LNA after the calibration procedure is accounted for in this uncertainty contribution.

A1-22 Uncertainty of the Mixer (FR2 only)

Higher frequency emissions beyond the upper frequency range of the measurement equipment require down converting prior to measurement. The uncertainty introduced by the down conversion is accounted for in this uncertainty contribution.

A.2 Compact Antenna Test Range

This clause describes measurement uncertainty contributors for TX measurements in Compact Antenna Test Range.

NOTE 1: Several MU contributor descriptions are defined in a way combining both BS for the measurement stage and calibration/reference antenna for calibration stage, e.g. for A1-4 this contribution is denoted as A1-4a for polarization mismatch between the BS and the receiving antenna, and as A1-4b for polarization mismatch between the reference antenna and the receiving antenna.

A2-1 Misalignment and pointing error of BS (a) /calibration antenna (b) (for EIRP)

This contribution denotes uncertainty in BS/calibration antenna alignment and BS/calibration antenna pointing error. In this measurement the BS/calibration antenna is aligned to maximum, also allowing for a zero contribution for polarization mismatch uncertainty. By adjusting for maximums to align, this contribution can be a small contribution. The calibration antenna's phase centre and polarization purity changes slightly according to the frequency. Therefore,

there should be some uncertainty reserved for this. To ensure that the point error is at a minimal, this contribution should be captured using the antenna pattern cut which is broadest (in the case of the BS this would most likely be in the azimuth domain).

NOTE 2: This MU contributor used different values for the EIRP measurement and for TRP measurement. Therefore, those two were explicitly differentiated in the MU derivation tables, i.e. A2-1 for EIRP, A2-18 for TRP.

A2-2 Standing wave between BS (a) / calibration antenna (b) and test range antenna

This value is extracting the uncertainty value and standard deviation of gain ripple coming from standing waves between BS and test range antenna. This value can be captured by moving the BS towards the test range antenna as the standing waves go in and out of phase causing a ripple in measured gain.

A2-3 RF leakage (SGH connector terminated & test range antenna connector cable terminated)

This contribution denotes noise leaking in to connector and cable(s) between test range antenna and receiving equipment. The contribution also includes the noise leakage between the connector and cable(s) between SGH/reference antenna and transmitting equipment.

A2-4 QZ ripple experienced by BS (a) /calibration antenna (b) (normal test conditions)

This is the quiet zone (QZ) ripple experienced by the BS/calibration antenna during the measurement or calibration phase. The purpose of this component is to capture the contributions that the reflections from the walls, roof and floor that will add to the EIRP measurement. The sum of all these reflections from the walls, range reflector (if applicable), roof and floor will give the overall value for the QZ ripple. In other words, the uncertainty component from the wall will not be separated from the roof or the floor. The purpose of this uncertainty component is to capture the overall reflections from the chamber walls experienced by the BS/calibration antenna. To capture the full effect of the QZ ripple a distance of 1λ should be measured from each of the BS/calibration antenna physical aperture edges, i.e. total QZ distance = physical aperture length +2 λ, to ensure the full volume of the QZ is captured in the uncertainty measurement.

NOTE 3: This MU contributor is defined for normal test conditions. MU contributor for the quality of QZ in extreme test conditions is defined in A2-13.

A2-5 Mismatch of receiver chain (i.e. between receiving antenna and measurement receiver (a) / low power receiver (b))

This uncertainty is the residual uncertainty contribution coming from multiple reflections between the receiving antenna and the test receiver equipment. This value can be captured through measurement by measuring the S_{11} towards the receive antenna and also towards the test receiver. The mismatch between the antenna reflection and the receiver reflection can also be calculated. If the same cable is used for calibration Stage 1, this can be considered systematic and negligible.

A2-6 Insertion loss of receiver chain

This uncertainty is the residual uncertainty contribution coming from introducing an antenna at the end of the cable. If this cable does not change/move between the calibration Stage 1 and the measurement Stage 2, the uncertainty is assumed to be systematic and negligible during the measurement stage. Alternatively, the insertion loss can also be calculated by taking the measurement of the cable where port 2 is the end of the cable connected to the BS or calibration antenna.

$$IL = -20\log_{10}|S_{21}| \text{ dB}$$

A2-7 Influence of the calibration antenna feed cable (i.e. flexing cables, adapters, attenuators, extra pathloss cable & connector repeatability)

During the calibration phase this cable is used to feed the calibration antenna and any influence it may have upon the measurements is captured. This is assessed by repeated measurements while flexing the cables and rotary joints. The largest difference between the results is recorded as the uncertainty.

A2-8 Misalignment positioning system

This contribution originates from uncertainty in sliding position and turn table angle accuracy. If the calibration antenna is aligned to maximum this contribution can be considered negligible and therefore set to zero.

A2-9 Rotary joints

If applicable the contribution of this uncertainty the accuracy in changing from azimuth to vertical measurements.

A2-10 Miscellaneous uncertainty

The term 'miscellaneous uncertainty' is used to define all the unknown, unquantifiable, etc. uncertainties associated with EIRP measurements. This term should include truly random effects as well as systematic uncertainties, such as that arising from dissimilarity between the patterns of the reference antenna (SGH) and the BS.

A2-11 Switching uncertainty

The purpose of the switching unit is to switch electromechanically different RF path to different measurement instruments of different measurement modes. The electromechanical switching clearly reduces the errors arising from manual switching work. Switching is also used to measure the path loss values of each polarization component. Even though the electromechanical switching is preferable during path loss and antenna performance measurements, some minor uncertainties can occur when the switch states are programmed to change their polarity.

A2-12 Frequency flatness of test system

This uncertainty contribution to account for the frequency interpolation error caused by a finite frequency resolution during the calibration stage.

A2-13 Quality of quiet zone (extreme test conditions)

This contribution is related to the ambient quality of the quiet zone for normal test conditions (A2-4) which originates from a reflectivity level of an anechoic chamber. The reflectivity level is determined from the average standard deviation of the electric field in the quiet zone. As the environmental enclosure is larger than the BS and the material of the environmental chamber may cause some reflection and refraction the quite zone flatness will be effected. The quality of the quiet zone for the extreme test is therefore larger that for the ambient due to the environmental enclosures effect.

A2-14 Wet radome loss variation

The environmental chamber radome will be an ineffective thermal isolator and will have extreme temperatures on the inside and the OTA chamber ambient temperature on the outside. In such conditions condensation is inevitable. This uncertainty is due to the variation in the radome loss due to condensation on the environmental chamber radome.

A2-15 Radome loss variation

The environmental chamber radome will affect the path between the BS and the test antenna due to both its insertion loss and also reflection and refraction from the materials surface. The loss is dependent on the material as well as its proximity to the BS. The uncertainty is the residual uncertainly of the total loss after calibration.

A2-16 Change in absorber behaviour

The environmental chamber will contain RF absorptive material to prevent reflections within the chamber. This RF absorptive material will be subjected to the extreme temperatures inside the environmental chamber and hence its properties will change. This uncertainty accounts for the effect of that change in behavior.

A2-17 Measurement system dynamic range uncertainty

Uncertainty associated with the addition of each of the directional power measurements to calculate the TRP due to the limited dynamic range of the OTA test system causing an overestimation.

A2-18 Misalignment and pointing error of BS (a) /calibration antenna (b) (for TRP)

This contribution denotes uncertainty in BS/calibration antenna alignment and BS/calibration antenna pointing error and its effect on the TRP calculation. The pointing error for TRP emissions measurement is larger than for EIRP (A2-1).

NOTE 4: This MU contributor used different values for the EIRP measurement and for TRP measurement. Therefore, those two were explicitly differentiated in the MU derivation tables, i.e. A2-1 for EIRP, A2-18 for TRP.

A2-19 Uncertainty of the LNA (FR2 only)

To maintain a low noise figure for the measurement system (possibly considering the addition of a down conversion mixer for high frequencies) and LNA may be required. The variation in the gain of the LNA after the calibration procedure is accounted for in this uncertainty contribution

A2-20 Uncertainty of the mixer (FR2 only)

Higher frequency emissions beyond the upper frequency range of the measurement equipment require down converting prior to measurement. The uncertainty introduced by the down conversion is accounted for in this uncertainty contribution.

A.3 Near Field Test Range

This clause describes measurement uncertainty contributors for TX measurements in Near Field Test Range.

A3-1 Axes intersection

This is a mechanical uncertainty term and aim to find the uncertainty related with the lateral displacement between the horizontal and vertical axes of the BS positioner. This can result in sampling the field on a non-ideal sphere. This uncertainty is assumed to have a Gaussian distribution.

A3-2 Axes orthogonality

The difference from 90° of the angle between the horizontal and vertical axes also results in sampling the field on a non-ideal sphere. This uncertainty is assumed to have a Gaussian distribution.

A3-3 Horizontal pointing

The horizontal mispointing of the horizontal axis to the probe reference point for Theta=0° also results in sampling the field on a non-ideal sphere. This uncertainty is assumed to have a Gaussian distribution.

A3-4 Probe vertical position

The vertical displacement of the probe reference point from the horizontal axis results in sampling the field on a non-ideal sphere. This uncertainty is assumed to have a Gaussian distribution.

A3-5 Probe horizontal/vertical pointing

The horizontal or vertical mispointing of the probe z-axis from the intersection point of the horizontal/vertical axis. This uncertainty is assumed to have a Gaussian distribution.

A3-6 Measurement distance

This is the knowledge of the distance between the intersection point of the horizontal and vertical axis and probe reference point. This uncertainty is assumed to have a Gaussian distribution.

A3-7 Amplitude and phase drift

The system drift due to temperature variations the signal at BS location to drift in amplitude and phase. This uncertainty is assumed to have a Gaussian distribution.

A3-8 Amplitude and phase noise

This uncertainty is due to the noise level of the test range so that the S/N ratio should be determined or measured at the BS location. The noise level is usually measured with a Spectrum Analyzer. This uncertainty is assumed to have a Gaussian distribution.

A3-9 Leakage and crosstalk

This uncertainty can be addressed by measurements on the actual system setup. The leakage and crosstalk cannot be separated from the random amplitude and phase errors so that the relative importance should be determined. This uncertainty is assumed to have a Gaussian distribution.

A3-10 Amplitude non-linearity

This uncertainty is the linearity of the receiver used for the measurement. It can be taken from the data sheet of the receiver.

A3-11 Amplitude and phase shift in rotary joint

This uncertainty is due to the variation of the rotary joint. It can be measured and is assumed to have a Gaussian distribution.

A3-12 Channel balance amplitude and phase

This uncertainty is relevant for systems which are using dual polarized probes and polarization switches. The amplitude and phase difference between two signal channels of the receiver includes the difference between the probe ports, difference between the channels of the polarization switch, connecting cables and reflection coefficients. This uncertainty is assumed to have a Gaussian distribution.

A3-13 Probe polarization amplitude and phase

The amplitude and phase of the probe polarization coefficients should be measured. This uncertainty is assumed to have a Gaussian distribution.

A3-14 Probe pattern knowledge

The probe(s) pattern(s) is assumed to be known so that the BS measurement in near field can be corrected when performing the near field to far field transform. There is no direct dependence between the BS pattern and the probe pattern in near field measurements. This uncertainty is assumed to have a Gaussian distribution.

A3-15 Multiple reflections

The multiple reflections occur when a portion of the transmitted signal is reflected form the receiving antenna back to the transmitting antenna and re-reflected by the transmitting antenna back to the receiving antenna. This uncertainty can be determined by multiple measurements of the BS when at different distance from the probes. This uncertainty is assumed to have a Gaussian distribution.

A3-16 Room scattering

As for the multiple reflections, a portion of the transmitted signal is reflected by either the absorbers or other structures in the measurement anechoic chamber before being received by the receiving antenna. This effect can be isolated from the multiple reflections by testing the BS in different positions, separated by $\lambda/4$ with respect to the anechoic chamber and comparing these measurements with the reference. This uncertainty is assumed to have a Gaussian distribution.

A3-17 BS support scattering

This is the uncertainty due to the BS supporting structure on the signal level. This uncertainty is assumed to have a Gaussian distribution.

A3-18 Scan area truncation

This uncertainty does affect this near field measurement. It can be addressed by comparing the measurement result when scanning the full area. This uncertainty is assumed to have a Gaussian distribution.

A3-19 Sampling point offset

This uncertainty has an influence in near field and far field. It is assumed to have a Gaussian distribution.

A3-20 Spherical mode truncation

The measured near field is expanded using a finite set of spherical modes. The number of modes is linked to number of samples. The filtering effect generated by the finite number of modes can improve measurement results by removing signals from outside the physical area of the BS. Care should be taken in order to make sure the removed signals are not from the BS itself. This uncertainty is usually negligible.

A3-21 Positioning

The relative position of the probe array is not ideal. This uncertainty is assumed to have a rectangular distribution.

A3-22 Probe array uniformity

This is the uncertainty due to the fact that different probes are used for each physical position. Different probes have different *radiation patterns*. Generally, the probe array is calibrated so that the uniformity of the probes is achieved.

A3-23 Mismatch of receiver chain

If the same chain configuration (including the measurement receiver; the probe antenna and other elements) is used in both stages, the uncertainty is considered systematic and constant ➔ 0.00 dB value.

If it is not the case, this uncertainty contribution has to be taken into account and should be measured or determined by the method described in TR 25.914 [24]. This uncertainty is assumed to have a U-shaped distribution.

A3-24 Insertion loss of receiver chain

It is composed of the following:

- Insertion loss of the probe antenna cable.
- Insertion loss of the probe antenna attenuator (if used).
- Insertion loss of RF relays (if used).

If the same chain configuration is used for measurement and calibration, the uncertainty due to the above components is considered systematic and constant ➔ 0.00 dB value. This uncertainty is assumed to have a Gaussian distribution.

A3-25 Uncertainty of the absolute gain of the probe antenna

This uncertainty appears in the both stages and it is thus considered systematic and constant➔ 0.00 dB value.

A3-26 Measurement repeatability - positioning repeatability

This uncertainty is due to the repositioning of the BS in the test setup. It can be addressed by repeating the corresponding measurement 5 times. Calculate the standard deviation of the metric obtained and use that as the measurement uncertainty. For tests that require multiple setups, the worst-case standard deviation is used. This uncertainty is assumed to have a Gaussian distribution.

A3-27 Mismatch of receiver chain

If the same chain configuration (including the measurement receiver; the probe antenna and other elements) is used in both stages, the uncertainty is considered systematic and constant ➔ 0.00 dB value.

If it is not the case, each uncertainty contribution has to be taken into account and should be measured or determined and then taking the total of all non-zero mismatch uncertainty contribution from all parts by root-sum-squares (RSS) method. This uncertainty is assumed to have a Gaussian distribution.

A3-28 Insertion loss of receiver chain

If the same chain configuration is used for measurement and calibration, the uncertainty due to the above components is considered systematic and constant ➔ 0.00 dB value. This uncertainty is assumed to have a Gaussian distribution.

A3-29 Mismatch in the connection of the calibration antenna

This is the uncertainty from the mismatch in the connection between the system coax cable and the calibration antenna. This uncertainty is from the mismatch between the cable and the reference antenna that is used for calibration. It is determined by the S_{11} of the reference antenna and the S_{11} of the cable to which the antenna is connected i.e. if using an SGH antenna for calibration and 10 dB pad is inserted on the cable connecting to the antenna this uncertainty contribution can be considered negligible. This uncertainty is assumed to have a U-shaped distribution.

A3-30 Influence of the calibration antenna feed cable

This uncertainty is due to the impact of the feeding cable on the radiation properties of the calibration antenna. In case of using either a standard horn or standard gain horn, the impact of the cable is to be considered negligible thus the uncertainty ➔ 0.00 dB value. In case of using a dipole-like antenna, the uncertainty should be addressed by measuring this impact. This uncertainty is assumed to have a Gaussian distribution.

A3-31 Influence of the probe antenna cable

If the same chain configuration is used for measurement and calibration, the uncertainty due to the above components is considered systematic and constant ➔ 0.00 dB value. This uncertainty is assumed to have a Gaussian distribution.

A3-32 Short term repeatability

It can be addressed by performing a repeatability test of the calibration antenna. This uncertainty is assumed to have a Gaussian distribution.

A3-33 Frequency flatness of test system

This uncertainty contribution to account for the frequency interpolation error caused by a finite frequency resolution during the calibration stage.

A.4 One Dimensional Compact Range

This clause describes measurement uncertainty contributors for TX measurements in One Dimensional Compact Range.

NOTE: Several MU contributor descriptions are defined in a way combining both BS for the measurement stage and calibration/reference antenna for calibration stage, e.g. for A1-4 this contribution is denoted as A1-4a for polarization mismatch between the BS and the receiving antenna, and as A1-4b for polarization mismatch between the reference antenna and the receiving antenna.

A4-1 Misalignment and pointing error of BS

This contribution denotes uncertainty in BS alignment and BS pointing error. In this measurement the BS is aligned to maximum, also allowing for a zero contribution for polarization mismatch uncertainty. By adjusting for maximums to align, this contribution can be a small contribution. The reference antenna´s phase centre and polarization purity changes slightly according to the frequency. Therefore, there should be some uncertainty reserved for this. To ensure that the pointing error is at a minimal, this contribution should be captured using the antenna pattern cut which is broadest (in the case of the BS this would most likely be in the azimuth domain).

A4-2 Standing wave between BS (a) / reference antenna (b) and test range antenna

This value is extracting the uncertainty value and standard deviation of gain ripple coming from standing waves between BS and test range antenna. This value can be captured by moving the BS towards the test range antenna as the standing waves go in and out of phase causing a ripple in measured gain.

A4-3 Quiet zone ripple experienced by BS (a) / reference antenna (b)

This is the quiet zone (QZ) ripple experienced by the BS/reference antenna during the measurement phase. The purpose of this component is to capture the contributions that the reflections from the walls, roof and floor that will add to the EIRP measurement. The sum of all these reflections from the walls, range reflector (if applicable), roof and floor will give the overall value for the QZ ripple. In other words, the uncertainty component from the wall will not be separated from the roof or the floor. The purpose of this uncertainty component is to capture the overall reflections from the chamber walls experienced by the BS/reference antenna. To capture the full effect of the QZ ripple a distance of 1λ must be measured from each of the BS/reference antenna physical aperture edges, i.e. total QZ distance = physical aperture length + 2 λ, to ensure the full volume of the QZ is captured in the uncertainty measurement.

A4-4 Phase curvature across the BS antenna (a) / reference antenna (b)

This contribution originates from the finite far field measurement distance, which causes phase curvature across the antenna of BS (a) / reference antenna (b).

A4-5 Polarization mismatch between BS (a) / reference antenna (b) and receiving antenna

This contribution originates from the misaligned polarization between the BS/reference antenna and the receiving antenna.

A4-6 Mutual coupling between BS (a) / reference antenna (b) and receiving antenna

This contribution originates from mutual coupling between the BS/reference antenna and the receiving antenna. Mutual coupling degrades not just the antenna efficiency, i.e. the EIRP value, but it can alter the antenna's *radiation pattern* as well. For compact range chamber, usually the spacing between the BS/reference antenna and the receiving antennas is large enough so that the level of mutual coupling might be negligible.

A4-7 Impedance mismatch in receiving chain

This contribution originates from multiple reflections between the receiving antenna and the measurement equipment. The multiple reflections can produce an overall reflection that depends not only upon the individual reflections of each part but their reflective interactions as well. The combination loss by the overall reflection can be higher or lower than individual loss by multiple reflections. The combination loss is called the mismatch error and leads to the measurement uncertainty.

A4-8 RF leakage (BS (a) / SGH (b) connector terminated and test range antenna connector cable terminated)

This contribution denotes noise leaking into connector and cable(s) between test range antenna and receiving equipment. The contribution also includes the noise leakage between the connector and cable(s) between SGH/reference antenna and transmitting equipment.

A4-9 Misalignment positioning system

This contribution originates from uncertainty in sliding position and turn table angle accuracy. If the calibration antenna is aligned to maximum this contribution can be considered negligible and therefore set to zero.

A4-10 Pointing error between reference antenna and test range antenna

This contribution originates from the misalignment of the testing direction and the *beam peak direction* of the receiving antenna due to imperfect rotation operation. The pointing misalignment may happen in both azimuth and vertical directions and the effect of the misalignment depends highly on the beamwidth of the beam under test. The same level of misalignment results in a larger measurement error for a narrower beam.

A4-11 Impedance mismatch in path to reference antenna

This contribution originates from multiple reflections between the reference antenna and the measurement equipment. After appropriate calibration, the measurement equipment may not introduce impedance mismatch error, but the error still happens between the reference antenna feed cable and the reference antenna.

A4-12 Impedance mismatch in path to compact probe

This contribution originates from multiple reflections between the receiving antenna and the measurement equipment. After appropriate calibration, the measurement equipment may not introduce impedance mismatch error, but the error still happens between the receiving antenna feed cable and the receiving antenna.

A4-13 Influence of reference antenna feed cable (i.e. flexing cables, adapters, attenuators, connector repeatability)

During the calibration phase this cable is used to feed the reference antenna and any influence it may have upon the measurements is captured. This is assessed by repeated measurements while flexing the cables and rotary joints. The largest difference between the results is recorded as the uncertainty.

A4-14 Mismatch of receiver chain (i.e. between receiving antenna and measurement equipment)

This uncertainty is the residual uncertainty contribution coming from multiple reflections between the receiving antenna and the test receiver equipment. This value can be captured through measurement by measuring the S_{11} towards the receive antenna and also towards the test receiver. The mismatch between the antenna reflection and the receiver reflection can also be calculated. If the same cable is used for calibration stage, this can be considered systematic and negligible.

A4-15 Insertion loss of receiver chain

This uncertainty is the residual uncertainty contribution coming from introducing an antenna at the end of the cable. If this cable does not change/move between the calibration and the measurement stage, the uncertainty is assumed to be systematic and negligible during the measurement stage. Alternatively, the insertion loss can also be calculated by taking the measurement of the cable where port 2 is the end of the cable connected to the BS or reference antenna.

$$IL = -20\log_{10}|S_{21}| \text{ dB}$$

A.5 General Chamber

This clause describes the measurement uncertainty contributors for TX measurements in general chamber.

NOTE: Several MU contributor descriptions are defined in a way combining both BS for the measurement stage and calibration/reference antenna for calibration stage, e.g. for A1-4 this contribution is denoted as A1-4a for polarization mismatch between the BS and the receiving antenna, and as A1-4b for polarization mismatch between the reference antenna and the receiving antenna.

A5-1 Positioning misalignment between the BS and the reference antenna

This contribution originates from the misalignment of the manufacturer declared coordinate system reference point of the BS and the phase centre of the reference antenna. The uncertainty makes the space propagation loss between the BS and the receiving antenna at the BS measurement stage (i.e. Stage 2) different from the space propagation loss between the reference antenna and the receiving antenna at the calibration stage (i.e. Stage 1).

A5-2 Pointing misalignment between the BS and the receiving antenna

This contribution originates from the misalignment of the testing direction and the *beam peak direction* of the receiving antenna due to imperfect rotation operation. The pointing misalignment may happen in both azimuth and vertical directions and the effect of the misalignment depends highly on the beamwidth of the beam under test. The same level of misalignment results in a larger measurement error for a narrower beam.

A5-3 Quality of quiet zone

This contribution originates from a reflectivity level of an anechoic chamber. The reflectivity level is determined from the average standard deviation of the electric field in the quiet zone. By repeating a free space VSWR measurement in 15° grid in elevation and azimuth, 264 standard deviation values in both polarizations are determined. From these values an average standard deviation of electric field in the quiet zone can be calculated from the equation:

$$\overline{S_{freq}} = \frac{\frac{\pi}{2NM}\sum_{n=1}^{N}\sum_{m=1}^{M} s_{n,m,hor}\sin(\theta_n) + \frac{\pi}{2NM}\sum_{n=1}^{N}\sum_{m=1}^{M} s_{n,m,ver}\sin(\theta_n)}{2}$$

Where:

N is the number of angular intervals in elevation,

M is the number of angular intervals in azimuth, and

θ_n is elevation of single measurement $s_{n,m,pol}$.

If an efficiency calibration with omni-directional calibration antenna is performed, the effect of reflectivity level decreases in Stage 1 (i.e. calibration measurement) and $\overline{S_{freq}}$ may be divided by factor 2. This is due to correcting impact of data averaging in this type of calibration. Efficiency calibration done with sampling step ≤ 30°, can be considered to have at least four independent samples. $\overline{S_{freq}}$ may be divided by factor 2 also in Stage 2 (i.e. BS measurement) for the same reason.

It's likely that asymmetry of the field probe will have a very small impact on this measurement uncertainty contributor, however, an upper bound to probe symmetry should be considered.

A5-4 Polarization mismatch between the BS (a) /reference antenna (b) and the receiving antenna

This contribution originates from the misaligned polarization between the BS/reference antenna and the receiving antenna.

A5-5 Mutual coupling between the BS (a) /reference antenna (b) and the receiving antenna

This contribution originates from mutual coupling between the BS/reference antenna and the receiving antenna. Mutual coupling degrades not just the antenna efficiency, i.e. the EIRP value, but it can alter the antenna's *radiation pattern* as well. For indoor anechoic chamber, usually the spacing between the BS/reference antenna and the receiving antennas is large enough so that the level of mutual coupling might be negligible.

A5-6 Phase curvature across the BS antenna (a) /reference antenna (b)

This contribution originates from the finite far field measurement distance, which causes phase curvature across the antenna of BS (a) /reference antenna (b).

A5-7 Impedance mismatch in the receiving chain

This contribution originates from multiple reflections between the receiving antenna and the power measurement equipment. The multiple reflections can produce an overall reflection that depends not only upon the individual reflections of each part but their reflective interactions as well. The combination loss by the overall reflection can be higher or lower than individual loss by multiple reflections. The combination loss is called the mismatch error and leads to the measurement uncertainty.

A5-8 Random uncertainty

The random uncertainty characterizes the undefined and miscellaneous effects which cannot be forecasted. One can estimate this type of uncertainty with a repeatability test by making a series of repeated measurement with a reference BS without changing anything in the measurement set-up.

A5-9 Impedance mismatch between the receiving antenna and the network analyzer

This contribution originates from multiple reflections between the receiving antenna and the network analyzer. After appropriate calibration, the network analyzer may not introduce impedance mismatch error, but the error still happens between the receiving antenna feed cable and the receiving antenna.

A5-10 Positioning and pointing misalignment between the reference antenna and the receiving antenna

This contribution originates from reference antenna alignment and pointing error. In this measurement if the maximum gain directions of the reference antenna and the receiving antenna are aligned to each other, this contribution can be considered negligible and therefore set to zero.

A5-11 Impedance mismatch between the reference antenna and the network analyzer

This contribution originates from multiple reflections between the reference antenna and the network analyzer. After appropriate calibration, the network analyzer may not introduce impedance mismatch error, but the error still happens between the reference antenna feed cable and the reference antenna.

A5-12 Influence of the reference antenna feed cable

In the calibration Stage 1, the influence of the calibration antenna feed cable is assessed by measurements. A measurement for calibration may be repeated with a reasonably differing routing of the feed cable. Largest difference among the results is entered to the uncertainty budget with a rectangular distribution.

A5-13 Reference antenna feed cable loss measurement uncertainty

Before performing the calibration, the reference antenna feed cable loss have to be measured. The measurement can be done with a network analyzer to measure its S_{21} and uncertainty is introduced.

A5-14 Influence of the receiving antenna feed cable

If the probe antenna is directional (i.e. peak gain >+5 dBi, e.g. horn, LPDA, etc.) and the same probe antenna cable configuration is used for both stages, the uncertainty is considered systematic and constant ➔ 0.00 dB value.

In other cases a technical study should be done.

A5-15 Uncertainty of the absolute gain of the receiving antenna

The uncertainty appears in both stages and it is thus considered systematic and constant ➔ 0.00 dB value.

A5-16 Frequency flatness of test system

This uncertainty contribution to account for the frequency interpolation error caused by a finite frequency resolution during the calibration stage.

A5-17 Measurement antenna frequency variation

For wide band measurement the measurement *antenna gain* will vary considerably over frequency. The gain can be calibrated however variation may still remain between calibration frequency steps. This uncertainty accounts for the variation between the calibrated steps.

A5-18 FSPL estimation error

For wide band measurement the measurement free space path loss in the chamber will vary with frequency. The loss can be calibrated however this uncertainty accounts for the variation between the calibrated steps.

A5-19 Measurement system dynamic range uncertainty

Uncertainty associated with the addition of each of the directional power measurements to calculate the TRP due to the limited dynamic range of the OTA test system causing an overestimation.

A5-20 Reflections in anechoic chamber

Uncertainty associated with the reflections in the chamber changing the coupling between the BS and the CLTA.

A.6 Reverberation Chamber

This clause describes measurement uncertainty contributors for TX measurements in Reverberation Chamber.

A6-1 Impedance mismatch in the receiving chain

This contribution originates from multiple reflections between the receiving antenna and the power measurement equipment. The multiple reflections can produce an overall reflection that depends not only upon the individual reflections of each part but their reflective interactions as well. The combination loss by the overall reflection can be higher or lower than individual loss by multiple reflections. The combination loss is called the mismatch error and leads to the measurement uncertainty.

A6-2 Random uncertainty

The random uncertainty characterizes the undefined and miscellaneous effects which cannot be forecasted. One can estimate this type of uncertainty with a repeatability test by making a series of repeated measurement with a reference BS without changing anything in the measurement set-up.

A6-3 Reference antenna radiation efficiency

This contribution is a residue of uncertainty of reference antenna radiation efficiency after calibration.

A6-4 Mean value estimation of reference antenna mismatch efficiency

This contribution originates from the error of the estimated mean related to the use of a finite number N of samples in the measurement of the reference antenna mismatch efficiency. The mean value estimation is calculated as $\sigma/\sqrt{N}$ where σ is the standard deviation of the series of measured values.

A6-5 Influence of the reference antenna feed cable

Before performing the calibration, the reference antenna feed cable loss has to be measured. The measurement can be done with a network analyzer to measure its S_{21} and uncertainty is introduced.

A6-6 Mean value estimation of transfer function

This contribution originates from the error of the estimated mean related to the use of a finite number N of samples in the measurement of the transfer function. The mean value estimation is calculated as $\sigma/\sqrt{N}$ where σ is the standard deviation of the series of measured values.

A6-7 Uniformity of transfer function

Standard deviation over BS positions and rotations of the transfer function $\langle|S_{21}|^2\rangle$. This uncertainty expresses the variations of measured TRP values with respect to translations and rotations of the BS. Ideally, the TRP does neither depend on translations nor rotations of the BS.

A.7 Plane Wave Synthesizer

This clause describes measurement uncertainty contributors for TX measurements in Plane Wave Synthesizer.

NOTE: Several MU contributor descriptions are defined in a way combining both BS for the measurement stage and calibration/reference antenna for calibration stage, e.g. for A1-4 this contribution is denoted as A1-4a for polarization mismatch between the BS and the receiving antenna, and as A1-4b for polarization mismatch between the reference antenna and the receiving antenna.

A7-1 Misalignment and pointing error of BS (a) /calibration antenna (b)

This contribution denotes uncertainty in BS/calibration antenna alignment and BS/calibration antenna pointing error. In this measurement the BS/calibration antenna is aligned to maximum, also allowing for a zero contribution for polarization mismatch uncertainty. By adjusting for maximums to align, this contribution can be a small contribution. The calibration antenna's phase centre and polarization purity changes slightly according to the frequency. Therefore, there should be some uncertainty reserved for this. To ensure that the point error is at a minimal, this contribution should be captured using the antenna pattern cut which is broadest (in the case of the BS this would most likely be in the azimuth domain).

A7-2 Longitudinal position uncertainty (i.e. standing wave and imperfect field synthesis) for BS antenna (a) / calibration antenna (b)

This value covers the effect of standing wave between BS or calibration antenna and the test range antenna, but also counts for the PWS imperfect field synthesis over distance. This value can be captured by moving the BS or calibration antenna towards the test range antenna.

A7-3 RF leakage (calibration antenna connector terminated)

This contribution denotes noise leaking in to connector and cable(s) between test range antenna and receiving equipment. The contribution also includes the noise leakage between the connector and cable(s) between reference antenna and transmitting equipment.

A7-4 QZ ripple experienced by BS (a) /calibration antenna (b)

This is the quiet zone (QZ) ripple experienced by the BS/reference antenna during the measurement phase. The purpose of this component is to capture the contributions that the reflections from the walls, roof and floor that will add to measurements. The sum of all these reflections from the walls, roof and floor will give the overall value for the QZ ripple. In other words, the uncertainty component from the wall will not be separated from the roof or the floor. The purpose of this uncertainty component is to capture the overall reflections from the chamber walls experienced by the BS/reference antenna.

A7-5 Miscellaneous uncertainty

The term 'miscellaneous uncertainty' is used to define all the unknown, unquantifiable, etc. uncertainties associated with EIRP measurements. This term should include truly random effects as well as systematic uncertainties, such as that arising from dissimilarity between the patterns of the reference antenna and the BS.

A7-6 Mismatch (i.e. reference antenna, network analyser and reference cable)

This uncertainty is the residual uncertainty contribution coming from multiple reflections between the receiving antenna and the test receiver equipment. This value can be captured through measurement by measuring the S_{11} towards the receive antenna and also towards the test receiver. The mismatch between the antenna reflection and the receiver reflection can also be calculated. If the same cable is used for calibration Stage 1, this can be considered systematic and negligible.

A7-7 Insertion loss of receiver chain

This uncertainty is the residual uncertainty contribution coming from introducing an antenna at the end of the cable. If this cable does not change/move between the calibration Stage 1 and the measurement Stage 2, the uncertainty is assumed to be systematic and negligible during the measurement stage. Alternatively, the insertion loss can also be calculated by taking the measurement of the cable where port 2 is the end of the cable connected to the BS or calibration antenna.

$$IL = -20\log_{10}|S_{21}| \text{ dB}$$

A7-8 Influence of the calibration antenna feed cable (i.e. flexing cables, adapters, attenuators, extra pathloss cable & connector repeatability)

During the calibration phase this cable is used to feed the calibration antenna and any influence it may have upon the measurements is captured. This is assessed by repeated measurements while flexing the cables and rotary joints. The largest difference between the results is recorded as the uncertainty.

A7-9 Misalignment of positioning system

This contribution originates from uncertainty in sliding position and turn table angle accuracy. If the calibration antenna is aligned to maximum this contribution can be considered negligible and therefore set to zero.

A7-10 Rotary joints

If applicable, this uncertainty term corresponds to the accuracy in changing from azimuth to vertical measurements.

A7-11 Switching uncertainty

The purpose of the switching unit is to switch electromechanically different RF path to different measurement instruments of different measurement modes. The electromechanical switching clearly reduces the errors arising from manual switching work. Switching is also used to measure the path loss values of each polarization component. Even though the electromechanical switching is preferable during path loss and antenna performance measurements, some minor uncertainties can occur when the switch states are programmed to change their polarity.

A7-12 Field repeatability

Each execution of field calibration of the measurement *antenna array* to find the PWS settings provides a slightly different set of settings for the RF components for each antenna path. This results in variation of the synthesized plane wave in the QZ and variation of PWS antenna to reference antenna coupling. This variation is described by field repeatability term.

A7-13 Frequency flatness of test system

This uncertainty contribution to account for the frequency interpolation error caused by a finite frequency resolution during the calibration stage.

A7-14 System non-linearity

This uncertainty term is calculated as RSS of the following items, assuming a rectangular distribution:

- System non-linearity in time. This is assessed by repeated measurements over a period of time (e.g. 60 minutes) for the same reference power transmitted by the reference antenna. The largest difference between the results is recorded as the uncertainty.
- System non-linearity in power. This is assessed by repeated measurements over a range of transmitted powers. The largest delta between the increments on the receiving side versus the transmitting side is recorded as the uncertainty.

Annex B (informative): Radiated RX measurement error contribution descriptions

B.1 Indoor Anechoic Chamber

This clause describes measurement uncertainty contributors for RX measurements in Indoor Anechoic Chamber.

NOTE: Several MU contributor descriptions are defined in a way combining both BS for the measurement stage and calibration/reference antenna for calibration stage, e.g. for A1-4 this contribution is denoted as A1-4a for polarization mismatch between the BS and the receiving antenna, and as A1-4b for polarization mismatch between the reference antenna and the receiving antenna.

B1-1 Positioning misalignment between the BS and the reference antenna

This contribution originates from the misalignment of the manufacturer declared coordinate system reference point of the BS and the phase centre of the reference antenna. The uncertainty makes the space propagation loss between the BS and the transmitting antenna at the BS measurement stage (i.e. Stage 2) different from the space propagation loss between the reference antenna and the transmitting antenna at the calibration stage (i.e. Stage 1).

B1-2 Pointing misalignment between the BS and the transmitting antenna

This contribution originates from the misalignment of the testing direction and the *beam peak direction* of the transmitting antenna due to imperfect rotation operation. The pointing misalignment may happen in both azimuth and vertical directions and the effect of the misalignment depends highly on the beamwidth of the beam under test. The same level of misalignment results in a larger measurement error for a narrower beam.

B1-3 Quality of quiet zone

This contribution originates from a reflectivity level of an anechoic chamber. The reflectivity level is determined from the average standard deviation of the electric field in the quiet zone. By repeating a free space VSWR measurement in 15 ° grid in elevation and azimuth, 264 standard deviation values in both polarizations are determined. From these values an average standard deviation of electric field in the quiet zone can be calculated from the equation:

$$\overline{S_{freq}} = \frac{\frac{\pi}{2NM}\sum_{n=1}^{N}\sum_{m=1}^{M} s_{n,m,hor}\sin(\theta_n) + \frac{\pi}{2NM}\sum_{n=1}^{N}\sum_{m=1}^{M} s_{n,m,ver}\sin(\theta_n)}{2}$$

where:

N is the number of angular intervals in elevation,

M is the number of angular intervals in azimuth, and

θ_n is elevation of single measurement $s_{n,m,pol}$.

If an efficiency calibration with omni-directional calibration antenna is performed, the effect of reflectivity level decreases in Stage 1 (i.e. calibration measurement) and $\overline{S_{freq}}$ may be divided by factor 2. This is due to correcting impact of data averaging in this type of calibration. Efficiency calibration done with sampling step ≤ 30°, can be considered to have at least four independent samples. $\overline{S_{freq}}$ may be divided by factor 2 also in stage 2 (i.e. BS measurement) for the same reason.

It's likely that asymmetry of the field probe will have a very small impact on this measurement uncertainty contributor, however, an upper bound to probe symmetry should be considered.

B1-4 Polarization mismatch between the BS (a) / reference antenna (b) and the transmitting antenna

This contribution originates from the misaligned polarization between the BS (a) /reference antenna (b) and the transmitting antenna.

B1-5 Mutual coupling between the BS (a) /reference antenna (b) and the transmitting antenna

This contribution originates from mutual coupling between the BS (a) /reference antenna (b) and the transmitting antenna. Mutual coupling degrades not just the antenna efficiency, but it can alter the antenna's *radiation pattern* as well. For indoor anechoic chamber, usually the spacing between the transmitting antenna and the BS/reference antenna is large enough so that the level of mutual coupling might be negligible.

B1-6 Phase curvature

This contribution originates from the finite far-field measurement distance, which causes phase curvature across the antenna of the BS/reference antenna.

B1-7 Impedance mismatch in the transmitting chain

This contribution originates from multiple reflections between the transmitting antenna and the signal generator. The multiple reflections can produce an overall reflection that depends not only upon the individual reflections of each part but their reflective interactions as well. The combination loss by the overall reflection can be higher or lower than individual loss by multiple reflections. The combination loss is called the mismatch error and leads to the measurement uncertainty.

B1-8 Random uncertainty

The random uncertainty characterizes the undefined and miscellaneous effects which cannot be forecasted. One can estimate this type of uncertainty with a repeatability test by making a series of repeated measurement with a reference BS without changing anything in the measurement set-up.

B1-9 Impedance mismatch between the transmitting antenna and the network analyzer

This contribution originates from multiple reflections between the transmitting antenna and the network analyzer. After appropriate calibration, the network analyzer may not introduce impedance mismatch error, but the error still happens between the transmitting antenna feed cable and the transmitting antenna.

B1-10 Positioning and pointing misalignment between the reference antenna and the transmitting antenna

This contribution originates from reference antenna alignment and pointing error. In this measurement if the maximum gain direction of the reference antenna and the transmitting antenna are aligned to each other, this contribution can be considered negligible and therefore set to zero.

B1-11 Impedance mismatch between the reference antenna and the network analyzer

This contribution originates from multiple reflections between the reference antenna and the network analyzer. After appropriate calibration, the network analyzer may not introduce impedance mismatch error, but the error still happens between the transmitting antenna feed cable and the transmitting antenna.

B1-12 Influence of the reference antenna feed cable

In the calibration Stage 1, the influence of the calibration antenna feed cable is assessed by measurements. A measurement for calibration may be repeated with a reasonably differing routing of the feed cable. Largest difference among the results is entered to the uncertainty budget with a rectangular distribution.

B1-13 Reference antenna feed cable loss measurement uncertainty

Before performing the calibration, the reference antenna feed cable loss have to be measured. The measurement can be done with a network analyzer to measure its S_{21} and uncertainty is introduced.

B1-14 Influence of the transmitting antenna feed cable

If the probe antenna is directional (i.e. peak gain >+5 dBi e.g. horn, LPDA, etc.) and the same probe antenna cable configuration is used for both stages, the uncertainty is considered systematic and constant ➔ 0.00 dB value.

B1-15 Uncertainty of the absolute gain of the transmitting antenna

The uncertainty appears in both stages and it is thus considered systematic and constant ➔ 0.00 dB value.

B.2 Compact Antenna Test Range

This clause describes measurement uncertainty contributors for RX measurements in Compact Antenna Test Range.

NOTE: Several MU contributor descriptions are defined in a way combining both BS for the measurement stage and calibration/reference antenna for calibration stage, e.g. for A1-4 this contribution is denoted as A1-4a for polarization mismatch between the BS and the receiving antenna, and as A1-4b for polarization mismatch between the reference antenna and the receiving antenna.

B2-1 Misalignment and pointing error of BS (a) /calibration antenna (b)

This contribution denotes uncertainty in BS (a) /calibration antenna (b) alignment and BS (a) /calibration antenna (b) pointing error. In this measurement the BS (a) /calibration antenna (b) is aligned to maximum, also allowing for a zero contribution for polarization mismatch uncertainty. By adjusting for maximums to align, this contribution can be a small contribution. The calibration antenna's phase centre and polarization purity changes slightly according to the frequency. Therefore, there should be some uncertainty reserved for this. To ensure that the point error is at a minimal, this contribution should be captured using the antenna pattern cut which is broadest (in the case of the BS this would most likely be in the azimuth domain).

B2-2 Standing wave between BS and test range antenna

This value is extracting the uncertainty value and standard deviation of gain ripple coming from standing waves between BS and test range antenna. This value can be captured by moving the BS towards the test range antenna as the standing waves go in and out of phase causing a ripple in measured gain.

B2-3 RF leakage & dynamic range, test range antenna cable connector terminated

This contribute denotes noise leaking in to connectors and cables between test range antenna and receiving equipment.

B2-4 QZ ripple experienced by BS (a) /calibration antenna (b)

This is the quiet zone ripple experienced by the BS (a) /calibration antenna (b) during the measurement phase. The purpose of this component is to capture the contributions that the reflections from the walls, roof and floor that will add to the EIS measurement. The sum of all these reflections from the walls, roof and floor will give the overall value for the QZ ripple. In other words, the uncertainty component from the wall will not be separated from the roof or the floor. The purpose of this uncertainty component is to capture the overall reflections from the chamber walls experienced by the BS (a) /calibration antenna (b). To capture the full effect of the QZ ripple a distance of 1λ should be measured from each of the BS (a) /calibration antenna (b) physical aperture edges, i.e. total QZ distance = physical aperture length + 2 λ, to ensure the full volume of the QZ is captured in the uncertainty measurement.

B2-5 Mismatch of transmit chain (i.e. between transmitting measurement antenna and BS)

This uncertainty is the residual uncertainty contribution coming from multiple reflections between the transmitting antenna and the signal generation equipment. This value can be captured through measurement by measuring the S_{11} towards the transmit antenna and also towards the test signal generator equipment. The mismatch between the antenna reflection and the transmit reflection can also be calculated.

B2-6 Insertion loss of transmit chain

This uncertainty is the residual uncertainty contribution coming from introducing an antenna at the end of the cable. If this cable does not change/move between the calibration Stage 1 and the BS measurement Stage 2, the uncertainty is assumed to be systematic. Alternatively, the insertion loss can also be calculated by taking the measurement of the cable where port 2 is the end of the cable connected to the measurement antenna.

$$IL = -20\log_{10}|S_{21}| \text{ dB}$$

B2-7 RF leakage (SGH connector terminated & test range antenna connector terminated)

This contribution denotes noise leaking in to connector and cable(s) between test range antenna and receiving equipment. The contribution also includes the noise leakage between the connector and cable(s) between SGH/reference antenna and transmitting equipment.

B2-8 Influence of the calibration antenna feed cable (i.e. flexing cables, adapters, attenuators & connector repeatability)

During the calibration phase this cable is used to feed the calibration antenna and any influence it may have upon the measurements is captured. This is assessed by repeated measurements while flexing the cables and rotary joints. The largest difference between the results is recorded as the uncertainty.

B2-9 Miscellaneous uncertainty

The term 'miscellaneous uncertainty' is used to define all the unknown, unquantifiable, etc. uncertainties associated with EIRP measurements. This term should include truly random effects as well as systematic uncertainties, such as that arising from dissimilarity between the patterns of the reference antenna (SGH) and the BS.

B2-10 Rotary joints

If applicable the contribution of this uncertainty is the accuracy in changing from azimuth to vertical measurements.

B2-11 Misalignment positioning system

This contribution originates from uncertainty in sliding position and turn table angle accuracy. If the calibration antenna is aligned to the maximum then this contribution can be considered negligible and therefore set to zero.

B2-12 Standing wave between SGH and test range antenna

This value is extracting the uncertainty value and standard deviation of gain ripple coming from standing waves between BS and test range antenna. This value can be captured by moving the BS towards the test range antenna as the standing waves go in and out of phase causing a ripple in measured gain.

B2-13 Switching uncertainty

The purpose of the switching unit is to switch electromechanically different RF path to different measurement instruments of different measurement modes. The electromechanical switching clearly reduces the errors arising from manual switching work. Switching is also used to measure the path loss values of each polarization component. Even though the electromechanical switching is preferable during path loss and antenna performance measurements, some minor uncertainties can occur when the switch states are programmed to change their polarity.

B.3 Near Field Test Range

This clause describes measurement uncertainty contributors for RX measurements in Near Field Test Range.

B3-1 Axes intersection

This is a mechanical uncertainty term and aim to find the uncertainty related with the lateral displacement between the horizontal and vertical axes of the BS positioner. This can result in sampling the field on a non-ideal sphere. This uncertainty is assumed to have a Gaussian distribution.

B3-2 Axes orthogonality

The difference from 90 ° of the angle between the horizontal and vertical axes also results in sampling the field on a non ideal sphere. This uncertainty is assumed to have a Gaussian distribution.

B3-3 Horizontal pointing

The horizontal mispointing of the horizontal axis to the probe reference point for Theta = 0 ° also results in sampling the field on a non-ideal sphere. This uncertainty is assumed to have a Gaussian distribution.

B3-4 Probe vertical position

The vertical displacement of the probe reference point from the horizontal axis results in sampling the field on a non ideal sphere. This uncertainty is assumed to have a Gaussian distribution.

B3-5 Probe horizontal/vertical pointing

The horizontal or vertical mispointing of the probe z-axis from the intersection point of the horizontal/vertical axis. This uncertainty is assumed to have a Gaussian distribution.

B3-6 Measurement distance

This is the knowledge of the distance between the intersection point of the horizontal and vertical axis and probe reference point. This uncertainty is assumed to have a Gaussian distribution.

B3-7 Amplitude and phase drift

The system drift due to temperature variations causes the signal at BS location to drift in amplitude and phase. This uncertainty is assumed to have a Gaussian distribution.

B3-8 Amplitude and phase noise

This uncertainty is due to the noise level of the test range so that the S/N ratio should be determined or measured at the BS location. The noise level is usually measured with a spectrum analyzer. This uncertainty is assumed to have a Gaussian distribution.

B3-9 Leakage and crosstalk

This uncertainty can be addressed by measurements on the actual system setup. The leakage and crosstalk cannot be separated from the random amplitude and phase errors so that the relative importance should be determined. This uncertainty is assumed to have a Gaussian distribution.

B3-10 Amplitude non-linearity

This uncertainty is the linearity of the receiver used for the measurement. It can be taken from the data sheet of the receiver.

B3-11 Amplitude and phase shift in rotary joint

This uncertainty is due to the variation of the rotary joint. It can be measured and is assumed to have a Gaussian distribution.

B3-12 Channel balance amplitude and phase

This uncertainty is relevant for systems which are using dual polarized probes and polarization switches. The amplitude and phase difference between two signal channels of the receiver includes the difference between the probe ports, difference between the channels of the polarization switch, connecting cables and reflection coefficients. This uncertainty is assumed to have a Gaussian distribution.

B3-13 Probe polarization amplitude and phase

The amplitude and phase of the probe polarization coefficients should be measured. This uncertainty is assumed to have a Gaussian distribution.

B3-14 Probe pattern knowledge

The probe(s) pattern(s) is assumed to be known so that the BS measurement in near field can be corrected when performing the near field to far field transform. There is no direct dependence between the BS pattern and the probe pattern in near field measurements. This uncertainty is assumed to have a Gaussian distribution.

B3-15 Multiple reflections

The multiple reflections occur when a portion of the transmitted signal is reflected form the receiving antenna back to the transmitting antenna and re-reflected by the transmitting antenna back to the receiving antenna. This uncertainty can be determined by multiple measurements of the BS when at different distance from the probes. This uncertainty is assumed to have a Gaussian distribution.

B3-16 Room scattering

As for the multiple reflections, a portion of the transmitted signal is reflected by either the absorbers or other structures in the measurement anechoic chamber before being received by the receiving antenna. This effect can be isolated from the multiple reflections by testing the BS in different positions, separated by $\lambda/4$ with respect to the anechoic chamber and comparing these measurements with the reference. This uncertainty is assumed to have a Gaussian distribution.

B3-17 BS support scattering

This is the uncertainty due to the BS supporting structure on the signal level. This uncertainty is assumed to have a Gaussian distribution.

B3-18 Scan area truncation

This uncertainty does affect the near field measurement. It can be addressed by comparing the measurement result when scanning the full area. This uncertainty is assumed to have a Gaussian distribution.

B3-19 Sampling point offset

This uncertainty has an influence in near field and far field. It is assumed to have a Gaussian distribution.

B3-20 Mode truncation

The measured near field is expanded using a finite set of spherical modes. The number of modes is linked to number of samples. The filtering effect generated by the finite number of modes can improve measurement results by removing signals from outside the physical area of the BS. Care should be taken in order to make sure the removed signals are not from the BS itself. This uncertainty is usually negligible.

B3-21 Positioning

The relative position of the probe array is not ideal. This uncertainty is assumed to have a rectangular distribution.

B3-22 Probe array uniformity

This is the uncertainty due to the fact that different probes are used for each physical position. Different probes have different *radiation patterns*. This uncertainty is assumed to have a Gaussian distribution.

B3-23 Mismatch of transmitter chain

If the same chain configuration (including the vector signal generator; the probe antenna and other elements) is used in both stages, the uncertainty is considered systematic and constant ➔ 0.00 dB value.

If it is not the case, this uncertainty contribution has to be taken into account and should be measured or determined by the method described in TR 25.914 [24]. This uncertainty is assumed to have a U-shaped distribution.

B3-24 Insertion loss of transmitter chain

It is composed of the following:

- Insertion loss of the probe antenna cable.
- Insertion loss of the probe antenna attenuator (if used).
- Insertion loss of RF relays (if used).

If the same chain configuration is used for measurement and calibration, the uncertainty due to the above components is considered systematic and constant ➔ 0.00 dB value. This uncertainty is assumed to have a Gaussian distribution.

B3-25 Uncertainty of the absolute gain of the probe antenna

This uncertainty appears in the both stages and it is thus considered systematic and constant➔ 0.00 dB value.

B3-26 Measurement repeatability - positioning repeatability

This uncertainty is due to the repositioning of the BS in the test setup. It can be addressed by repeating the corresponding measurement 10 times. Calculate the standard deviation of the metric obtained and use that as the measurement uncertainty. For tests that require multiple setups, the worst-case standard deviation is used. This uncertainty is assumed to have a Gaussian distribution.

B3-27 Mismatch of transmitter chain

If the same chain configuration (including the measurement receiver; the probe antenna and other elements) is used in both stages, the uncertainty is considered systematic and constant ➔ 0.00 dB value.

If it is not the case, this uncertainty contribution has to be taken into account and should be measured or determined by the method described in TR 25.914 [24]. This uncertainty is assumed to have a Gaussian distribution.

B3-28 Insertion loss of transmitter chain

If the same chain configuration is used for measurement and calibration, the uncertainty due to the above components is considered systematic and constant ➔ 0.00 dB value. This uncertainty is assumed to have a Gaussian distribution.

B3-29 Mismatch in the connection of the calibration antenna

This is the uncertainty from the mismatch in the connection between the system coax cable and the calibration antenna. It should be measured or determined by the method described in TR 25.914 [24]. This uncertainty is assumed to have a U-shaped distribution.

B3-30 Influence of the calibration antenna feed cable

This uncertainty is due to the impact of the feeding cable on the radiation properties of the calibration antenna. In case of using either a standard horn or standard gain horn, the impact of the cable is to be considered negligible thus the uncertainty ➔ 0.00 dB value. In case of using a dipole-like antenna, the uncertainty should be addressed by measuring this impact. This uncertainty is assumed to have a Gaussian distribution.

B3-31 Influence of the probe antenna cable

If the same chain configuration is used for measurement and calibration, the uncertainty due to the above components is considered systematic and constant ➔ 0.00 dB value. This uncertainty is assumed to have a Gaussian distribution.

B3-32 Short term repeatability

It can be addressed by performing a repeatability test of the calibration antenna. This uncertainty is assumed to have a Gaussian distribution.

B.4 One Dimensional Compact Range

This clause describes measurement uncertainty contributors for RX measurements in One Dimensional Compact Range.

NOTE: Several MU contributor descriptions are defined in a way combining both BS for the measurement stage and calibration/reference antenna for calibration stage, e.g. for A1-4 this contribution is denoted as A1-4a for polarization mismatch between the BS and the receiving antenna, and as A1-4b for polarization mismatch between the reference antenna and the receiving antenna.

B4-1 Misalignment BS and pointing error

This contribution denotes uncertainty in BS alignment and BS pointing error. In this measurement the BS is aligned to maximum, also allowing for a zero contribution for polarization mismatch uncertainty. By adjusting for maximums to align, this contribution can be a small contribution. The reference antenna´s phase centre and polarization purity changes slightly according to the frequency. Therefore, there should be some uncertainty reserved for this. To ensure that the pointing error is at a minimal, this contribution should be captured using the antenna pattern cut which is broadest (in the case of the BS this would most likely be in the azimuth domain).

B4-2 Standing wave between BS (a) /reference antenna (b) and test range antenna

This value is extracting the uncertainty value and standard deviation of gain ripple coming from standing waves between BS/reference antenna and test range antenna. This value can be captured by moving the BS (a) /reference antenna (b) towards the test range antenna as the standing waves go in and out of phase causing a ripple in measured gain.

B4-3 Quiet zone ripple experienced by BS (a) /reference antenna (b)

This is the quiet zone (QZ) ripple experienced by the BS (a) / reference antenna (b) during the measurement phase. The purpose of this component is to capture the contributions that the reflections from the walls, roof and floor that will add to the EIS measurement. The sum of all these reflections from the walls, roof and floor will give the overall value for the QZ ripple. In other words, the uncertainty component from the wall will not be separated from the roof or the floor. The purpose of this uncertainty component is to capture the overall reflections from the chamber walls experienced by the BS (a) / reference antenna (b). To capture the full effect of the QZ ripple a distance of 1λ must be measured from each of the BS (a) / reference antenna (b) physical aperture edges, i.e. total QZ distance = physical aperture length + 2 λ, to ensure the full volume of the QZ is captured in the uncertainty measurement.

B4-4 Phase curvature

This contribution originates from the finite far-field measurement distance, which causes phase curvature across the antenna of the BS/reference antenna.

B4-5 Polarization mismatch between BS (a) /reference antenna (b) and transmitting antenna

This contribution originates from the misaligned polarization between the BS (a) /reference antenna (b) and the transmitting antenna.

B4-6 Mutual coupling between BS (a) /reference antenna (b) and transmitting antenna

This contribution originates from mutual coupling between the BS (a) /reference antenna (b) and the transmitting antenna. Mutual coupling degrades not just the antenna efficiency, but it can alter the antenna's *radiation pattern* as well. For compact range chamber, usually the spacing between the transmitting antenna and the BS (a) /reference antenna (b) is large enough so that the level of mutual coupling might be negligible.

B4-7 Impedance mismatch in transmitting chain

This contribution originates from multiple reflections between the transmitting antenna and the signal generator. The multiple reflections can produce an overall reflection that depends not only upon the individual reflections of each part but their reflective interactions as well. The combination loss by the overall reflection can be higher or lower than individual loss by multiple reflections. The combination loss is called the mismatch error and leads to the measurement uncertainty.

B4-8 RF leakage and dynamic range

This contribute denotes noise leaking into connectors and cables between test range antenna and receiving equipment.

B4-9 Misalignment positioning system

This contribution originates from uncertainty in sliding position and turn table angle accuracy. If the reference antenna is aligned to the maximum then this contribution can be considered negligible and therefore set to zero.

B4-10 Pointing error between reference antenna and test range antenna

This contribution originates from the misalignment of the testing direction and the *beam peak direction* of the transmitting antenna due to imperfect rotation operation. The pointing misalignment may happen in both azimuth and vertical directions and the effect of the misalignment depends highly on the beamwidth of the beam under test. The same level of misalignment results in a larger measurement error for a narrower beam.

B4-11 Impedance mismatch in path to reference antenna

This contribution originates from multiple reflections between the reference antenna and the measurement equipment. After appropriate calibration, the measurement equipment may not introduce impedance mismatch error, but the error still happens between the reference antenna feed cable and the reference antenna.

B4-12 Impedance mismatch in path to compact probe

This contribution originates from multiple reflections between the transmitting antenna and the measurement equipment. After appropriate calibration, the measurement equipment may not introduce impedance mismatch error, but the error still happens between the transmitting antenna feed cable and the transmitting antenna.

B4-13 Influence of reference antenna feed cable (flexing cables, adapters, attenuators and connector repeatability)

During the calibration phase this cable is used to feed the reference antenna and any influence it may have upon the measurements is captured. This is assessed by repeated measurements while flexing the cables and rotary joints. The largest difference between the results is recorded as the uncertainty.

B4-14 Mismatch of transmitter chain (i.e. between transmitting measurement antenna and BS)

This uncertainty is the residual uncertainty contribution coming from multiple reflections between the transmitting antenna and the signal generation equipment. This value can be captured through measurement by measuring the S_{11} towards the transmit antenna and also towards the test signal generator equipment. The mismatch between the antenna reflection and the transmit reflection can also be calculated.

B4-15 Insertion loss of transmitter chain

This uncertainty is the residual uncertainty contribution coming from introducing an antenna at the end of the cable. If this cable does not change/move between the calibration and the BS measurement stage, the uncertainty is assumed to be systematic. Alternatively, the insertion loss can be calculated by taking the measurement of the cable where port 2 is the end of the cable connected to the measurement antenna.

$IL = -20\log_{10}|S_{21}|$ dB

B4-16 RF leakage (SGH connector terminated and test range antenna connector terminated)

This contribution denotes noise leaking into connector and cable(s) between test range antenna and receiving equipment. The contribution also includes the noise leakage between the connector and cable(s) between SGH/reference antenna and transmitting equipment.

B.5 Plane Wave Synthesizer

This clause describes measurement uncertainty contributors for RX measurements in Plane Wave Synthesizer.

NOTE: Several MU contributor descriptions are defined in a way combining both BS for the measurement stage and calibration/reference antenna for calibration stage, e.g. for A1-4 this contribution is denoted as A1-4a for polarization mismatch between the BS and the receiving antenna, and as A1-4b for polarization mismatch between the reference antenna and the receiving antenna.

B5-1 Misalignment and pointing error of BS (a) /calibration antenna (b)

This contribution denotes uncertainty in BS/calibration antenna alignment and BS/calibration antenna pointing error. In this measurement the BS/calibration antenna is aligned to maximum, also allowing for a zero contribution for polarization mismatch uncertainty. By adjusting for maximums to align, this contribution can be a small contribution. The calibration antenna's phase centre and polarization purity changes slightly according to the frequency. Therefore, there should be some uncertainty reserved for this. To ensure that the point error is at a minimal, this contribution should be captured using the antenna pattern cut which is broadest (in the case of the BS this would most likely be in the azimuth domain).

B5-2 Longitudinal position uncertainty (i.e. standing wave and imperfect field synthesis) for BS antenna (a) / calibration antenna (b)

This value covers the effect of standing wave between BS or calibration antenna and the test range antenna, but also counts for the PWS imperfect field synthesis over distance. This value can be captured by moving the BS or calibration antenna towards the test range antenna.

B5-3 RF leakage (calibration antenna connector terminated)

This contribution denotes noise leaking in to connector and cable(s) between test range antenna and receiving equipment. The contribution also includes the noise leakage between the connector and cable(s) between reference antenna and transmitting equipment.

B5-4 QZ ripple experienced by BS (a) /calibration antenna (b)

This is the quiet zone (QZ) ripple experienced by the BS/reference antenna during the measurement phase. The purpose of this component is to capture the contributions that the reflections from the walls, roof and floor that will add to measurements. The sum of all these reflections from the walls, roof and floor will give the overall value for the QZ ripple. In other words, the uncertainty component from the wall will not be separated from the roof or the floor. The purpose of this uncertainty component is to capture the overall reflections from the chamber walls experienced by the BS/reference antenna.

B5-5 Miscellaneous uncertainty

The term 'miscellaneous uncertainty' is used to define all the unknown, unquantifiable, etc. uncertainties associated with EIRP measurements. This term should include truly random effects as well as systematic uncertainties, such as that arising from dissimilarity between the patterns of the reference antenna and the BS.

B5-6 Mismatch (i.e. reference antenna, network analyser and reference cable)

This uncertainty is the residual uncertainty contribution coming from multiple reflections between the receiving antenna and the test receiver equipment. This value can be captured through measurement by measuring the S_{11} towards the receive antenna and also towards the test receiver. The mismatch between the antenna reflection and the receiver reflection can also be calculated. If the same cable is used for calibration Stage 1, this can be considered systematic and negligible.

B5-7 Insertion loss of transmit chain

This uncertainty is the residual uncertainty contribution coming from introducing an antenna at the end of the cable. If this cable does not change/move between the calibration Stage 1 and the measurement Stage 2, the uncertainty is assumed to be systematic and negligible during the measurement stage. Alternatively, the insertion loss can also be calculated by taking the measurement of the cable where port 2 is the end of the cable connected to the BS or calibration antenna.

$$IL = -20\log_{10}|S_{21}| \text{ dB}$$

B5-8 Influence of the calibration antenna feed cable (i.e. flexing cables, adapters, attenuators, extra pathloss cable & connector repeatability)

During the calibration phase this cable is used to feed the calibration antenna and any influence it may have upon the measurements is captured. This is assessed by repeated measurements while flexing the cables and rotary joints. The largest difference between the results is recorded as the uncertainty.

B5-9 Misalignment of positioning system

This contribution originates from uncertainty in sliding position and turn table angle accuracy. If the calibration antenna is aligned to maximum this contribution can be considered negligible and therefore set to zero.

B5-10 Rotary joints

If applicable, this uncertainty term corresponds to the accuracy in changing from azimuth to vertical measurements.

B5-11 Switching uncertainty

The purpose of the switching unit is to switch electromechanically different RF path to different measurement instruments of different measurement modes. The electromechanical switching clearly reduces the errors arising from manual switching work. Switching is also used to measure the path loss values of each polarization component. Even though the electromechanical switching is preferable during path loss and antenna performance measurements, some minor uncertainties can occur when the switch states are programmed to change their polarity.

B5-12 Field repeatability

Each execution of field calibration of the measurement *antenna array* to find the PWS settings provides a slightly different set of settings for the RF components for each antenna path. This results in variation of the synthesized plane wave in the QZ and variation of PWS antenna to reference antenna coupling. This variation is described by field repeatability term.

B5-13 Frequency flatness of test system

This uncertainty contribution to account for the frequency interpolation error caused by a finite frequency resolution during the calibration stage.

B5-14 System non-linearity

This uncertainty term is calculated as RSS of the following items, assuming a rectangular distribution:

- System non-linearity in time. This is assessed by repeated measurements over a period of time (e.g. 60 minutes) for the same reference power transmitted by the reference antenna. The largest difference between the results is recorded as the uncertainty.

- System non-linearity in power. This is assessed by repeated measurements over a range of transmitted powers. The largest delta between the increments on the receiving side versus the transmitting side is recorded as the uncertainty.

Annex C (informative): Test equipment uncertainty values

C.1 Test equipment measurement error contribution descriptions

C1-1 Uncertainty of the RF power measurement equipment (e.g. spectrum analyzer, power meter)

The receiving device used to measure the received signal level in the EIRP tests either as an absolute level or as a relative level. These receiving devices to name a few are spectrum analyzers, network analyzers or power meter. These devices will have an uncertainty contribution of their own; this value declared by the test gear vendor should be recorded as this uncertainty contribution. If a power meter is used then both measurement uncertainty and out of band noise is considered as part of the contribution. This uncertainty value can be found in table C2-1 and was a result of compromised value in order to align all test methods having this uncertainty contribution.

C1-2 Uncertainty of the RF signal generator

The use of this signal generator introduces an uncertainty on the absolute output level. The uncertainty value will be indicated in the manufacturer's data sheet in logs. This uncertainty value can be found in Annex C2-1 and was a result of compromised value in order to align all test methods having this uncertainty contribution.

C1-3 Uncertainty of the network analyser

Drift (temp, oscillators, filters, etc.) start-to-end time of measurements

This uncertainty includes all the uncertainties involved in the S_{21} measurement (including drift and frequency flatness) with a network analyzer, and will be calculated from the manufacturer's data in logs. This uncertainty also includes analyzer uncertainty for multi-polarization (2 or more ports) measured simultaneously. This uncertainty value can be found in table C2-1 and was a result of compromised value in order to align all test methods having this uncertainty contribution.

C1-4 Uncertainty of the absolute gain of the reference antenna

This uncertainty consists of the uncertainty of the gain value associated with the gain value denoted from the antenna calibration. This uncertainty value can be found in table C.2-1 and was a result of compromised value in order to align all test methods having this uncertainty contribution.

C1-5 Measurement receiver (co-location)

Error for the receiver used to measure the noise floor level in the co-location test.

C1-6 Noise figure measurement accuracy

Noise figure calibration accuracy used for the low power levels used during the co-location measurements.

C1-7 RF power measurement equipment (e.g. spectrum analyser, power meter) - low power (UEM, absolute ACLR)

Measurement equipment error associated with measuring low power absolute high frequency (FR2) unwanted emissions.

C1-8 RF power measurement equipment (e.g. spectrum analyzer, power meter) - relative (ACLR)

Measurement equipment error associated with measuring low power relative high frequency (FR2) unwanted emissions.

C1-9 RF power measurement equipment standard uncertainty σ (dB) of the absolute level for a time domain wideband measurement for FR2

Measurement equipment error associated with measuring low power, wide band time domain high dynamic range signals required for the Tx OFF transient test.

C.2 Measurement Equipment uncertainty values

The following uncertainty distribution and standard uncertainty (σ) values proposed by test vendors are adopted for the RF power measurement equipment, RF signal generator, and network analyzer to calculate the uncertainty budget.

Table C.2-1: Test equipment uncertainty values for FR1

UID	Instrument	Use case	Measurement Uncertainty type	Standard uncertainty σ (dB)			Probability distribution
				f ≤ 3 GHz	3 GHz < f ≤ 4.2 GHz	4.2 < f ≤ 6 GHz	
C1-1	RF power measurement equipment (e.g. spectrum analyzer, power meter)	Measurement stage	Total amplitude accuracy (with input levels down to -70 dBm)	0.14	0.26	0.26	Gaussian
C1-2	RF signal generator	Measurement stage	Level error	0.46	0.46	0.46	Gaussian
C1-3	Network analyzer	Calibration stage	Accuracy of transmission measurements	0.13	0.20	0.2	Gaussian
C1-5	Measurement receiver (co-location)	Measurement stage	Amplitude accuracy	0.41	0.74	0.8	Gaussian
C1-6	Noise figure measurement accuracy	Calibration stage	Amplitude accuracy	0.2	0.2	0.2	Gaussian
NOTE: Standard uncertainty values were derived from datasheets of mid-tier to high-end RF signal generators, spectrum analyzers, and VNAs. Standard uncertainty values of power measurement equipment were derived from datasheet of spectrum analyzers.							

Table C.2-2: Test equipment uncertainty values for FR2

UID	Instrument	Standard uncertainty σ (dB)		Probability distribution
		24.25 < f ≤ 29.5 GHz	37 < f ≤ 43.5 GHz	
C1-1	Uncertainty of the RF power measurement equipment (e.g. spectrum analyzer, power meter) - high power	0.50	0.70	Gaussian
C1-2	RF signal generator	0.90	0.90	Gaussian
C1-3	Network Analyzer	0.30	0.30	Gaussian
C1-7	RF power measurement equipment (e.g. spectrum analyzer, power meter) - low power (UEM)	0.90	0.90	Gaussian
C1-8	RF power measurement equipment (e.g. spectrum analyzer, power meter) - relative (ACLR)	0.75	0.90	Gaussian
C1-9	RF power measurement equipment (e.g. spectrum analyzer, power meter) - relative (ACLR)	1.25	1.45	Gaussian

The following uncertainty distribution and standard uncertainty (σ) value for the reference antenna derived as the maximum of companies' proposals are adopted in all test methods to calculate the uncertainty budget.

Table C.2-3: Reference antenna uncertainty value for FR1

UID	Instrument	Use case	Standard uncertainty σ (dB)			Probability distribution
			f ≤ 3 GHz	3 GHz < f ≤ 4.2 GHz	4.2 < f ≤ 6 GHz	
C1-4	Reference antenna	Calibration stage	0.29	0.25	0.25	Rectangular

Table C.2-4: Reference antenna uncertainty value for FR2

UID	Instrument	Use case	Standard uncertainty σ (dB)		Probability distribution
			24.25 < f ≤ 29.5 GHz	37 < f ≤ 43.5 GHz	
C1-4	Reference antenna	Calibration stage	0.3	0.3	Rectangular

C.3 MU of TE derived from conducted specification

For a number of test cases the conducted measurement uncertainty used in TS 36.141 [3] is used to estimate the uncertainty contributing of the conducted part (filters, limiters, switches etc.) of the OTA test set up.

Where appropriate the mismatch uncertainty is removed from the conducted uncertainty so that it is not included twice in the calculation.

C3-1 DL-RS MU derived from conducted specification

Conducted MU (1.96σ) from TS 36.141 [3]: ±0.8 dB, f ≤ 3 GHz, ±1.1 dB, 3 GHz < f ≤ 4.2 GHz

Conducted contribution for OTA MU budget (1σ): ±0.41 dB, f ≤ 3 GHz,±0.56 dB, 3 GHz < f ≤ 4.2 GHz

C3-2 Total power dynamic range conducted uncertainty

Conducted MU (1.96σ) from TS 36.141 [3]: ±0.4 dB

Conducted contribution for OTA MU budget (1σ): ±0.2 dB

C3-3 Transmitter mandatory spurious emissions

Conducted MU (1.96σ) from TS 36.141 [3]: 9 kHz < f ≤ 4 GHz: ±2.0 dB, 4 GHz < f ≤ 19 GHz: ±4.0 dB

Conducted contribution for OTA MU budget (1σ): 9 kHz < f ≤ 4 GHz: ±1.0 dB, 4 GHz < f ≤ 19 GHz: ±2.0 dB

C3-4 Receiver spurious emissions

Conducted MU (1.96σ) from TS 36.141 [3]: 30M Hz < f ≤ 4 GHz: ±2.0 dB, 4 GHz < f ≤ 19 GHz: ±4.0 dB

Conducted contribution for OTA MU budget (1σ): 9 kHz < f ≤ 4 GHz: ±1.0 dB, 4 GHz < f ≤ 19 GHz: ±2.0 dB

C3-5 Additional (co-existence) spurious emissions

Conducted MU (1.96σ) from TS 36.141 [3]: ±2.0 dB for > -60dBm, f ≤ 3 GHz, ±2.5 dB, 3 GHz < f ≤ 4.2 GHz,

±3.0 dB, 4.2 GHz < f ≤ 6 GHz

Conducted contribution for OTA MU budget (1σ): ±1.0 dB for > -60dBm, f ≤ 3 GHz, ±1.28 dB, 3 GHz < f ≤ 4.2 GHz, ±1.53 dB, 4.2 GHz < f ≤ 6 GHz

C3-6 TX IMD - conducted measurement uncertainty

Conducted MU (1.96σ) from TS 36.141 [3]: ±1.0 dB

Conducted contribution for OTA MU budget (1σ): ±1.0 dB, f ≤ 3 GHz, ±1.1 dB, 3 GHz < f ≤ 4.2 GHz, ± 1.2 dB, 4.2 GHz < f ≤ 6 GHz

C3-7 Colocation blocking - conducted measurement uncertainty

Conducted accuracy of the co-location blocking interferer is the same as the TX IMD interferer.

Table C.3-1: MU derived from the conducted specification

UID	Requirement	Use case	Standard uncertainty σ (dB)				Probability distribution
			f ≤ 3 GHz	3 GHz < f ≤ 4.2 GHz	4.2 GHz < f ≤ 6 GHz	6 GHz < f ≤ 26 GHz	
C3-1	DL-RS MU derived from conducted specification	Measurement stage	0.41	0.56	0.56	N/A	Gaussian
C3-2	Total power dynamic range conducted uncertainty		0.2	0.2	0.2	N/A	
C3-3	Transmitter mandatory spurious emissions		1.0			2.0	
C3-4	Receiver spurious emissions		1.0			2.0	
C3-5	Additional (co-existence) spurious emissions		1.02	1.28	1.53	N/A	
C3-6	TX IMD - conducted measurement uncertainty		1	1.1	1.2	N/A	
C3-7	Colocation blocking - conducted measurement uncertainty		1	1.1	1.2	N/A	

Annex D (informative): Beam sweeping

D.1 Introduction

For emissions with a high beam-forming gain, correct assessment of TRP requires grid measurements at small angular steps. In a measurement where the BS is mounted on a turntable this turns into a large number of mechanical rotations of the BS and hence lengthy measurements. One way to mitigate this problem is to use *beam sweeping* as a complement to mechanical rotations. Instead of performing the TRP measurements using a fixed beam, the BS will be programmed to move the beam across several pre-defined positions, while the power samples are recorded for each point on the grid.

Such method could be advantageous not only for in-band signals, but also for spurious emissions characterized by high beamforming gain, such as harmonics.

The results below show that the calculated TRP from the beam average pattern is very close to the TRP of all individual beams that are included in the sweeping. The advantage of this method would be the possibility to use sparser spherical grid compared to reference angular steps, and without the need to find the peaks of the emissions.

D.2 Simulation results

The effect of beam sweeping is illustrated by using a 10x10 Uniform Rectangular Array with 0.55λ element separation at the carrier frequency. A number of beams is realized by a constant phase-gradient steering. The beam sweeping range is selected to completely avoid the forming of grating lobes and the angular step between two lobes is selected as the Half Power Beamwidth (HPBW) of a broadside beam.

In the example of figure D.2-1 the reference angular step is 11.6 ° ($D = 5\lambda => \Delta\phi_{\mathrm{ref}} = \lambda/D$=1/5 radians). For the harmonic in figure D.2-2 the reference step is 5.8 °. The full sphere average of the EIRP is the TRP. For simplicity, only sweeping in the horizontal plane is employed. In the case where a fixed beam is used the average EIRP is not correct when the sampling angular step is larger than the reference angular step $\Delta\phi_{ref}$. However, when the EIRP pattern is first averaged over all beams (blue curves) the average EIRP is virtually constant for any angular step up to 36 °, see figure D.2-3.

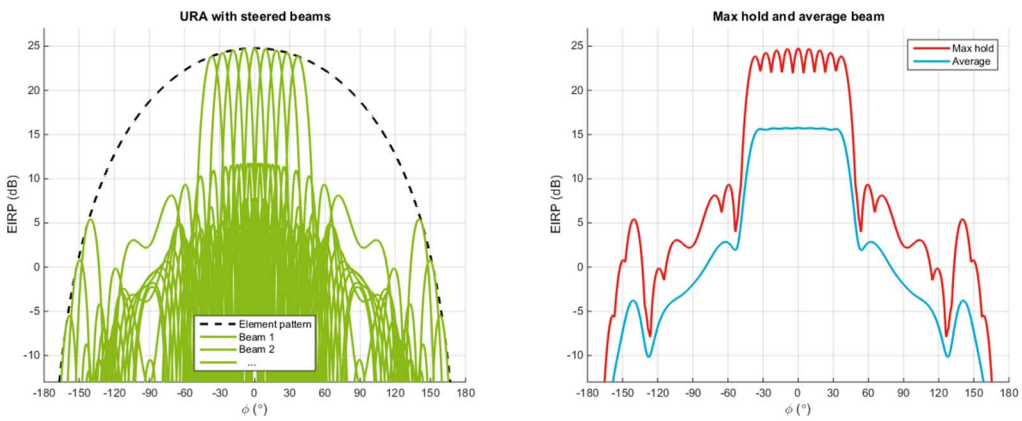

Figure D.2-1: In the left figure several beam patterns of the array are depicted, together with the corresponding element pattern. In the right picture two different settings of a spectrum analyser are simulated. Under the "Max hold" setting of the analyser the maximum EIRP over all beams is presented at every angular point. Under the "Average" setting the average EIRP over all beams is presented. The latter case is the intended setting to use for TRP assessment

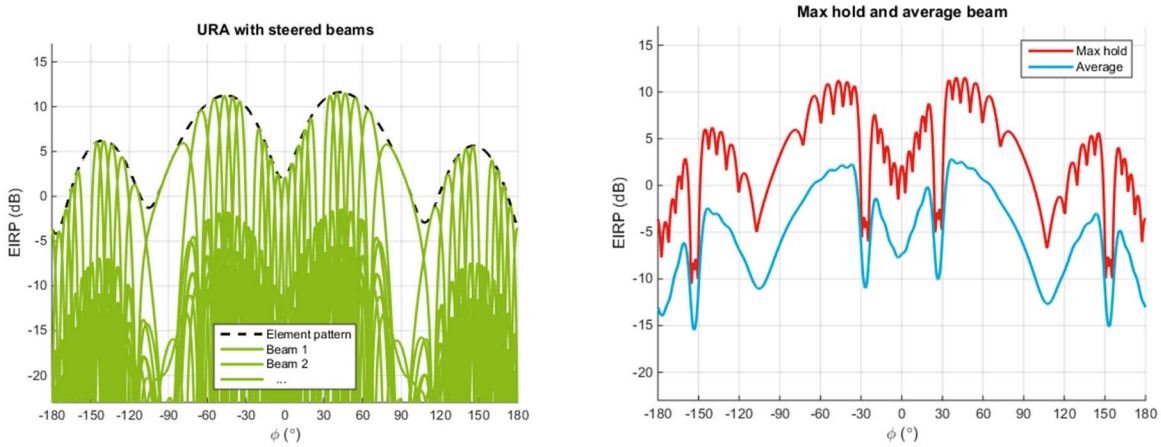

Figure D.2-2: The beam sweeping at the 2nd harmonic frequency is simulated using an embedded element pattern. Left plot depicts the EIRP patterns of individual beams. Right plot depicts the *max hold* and beam *average* EIRP patterns

Fundamental frequency **2nd harmonic**

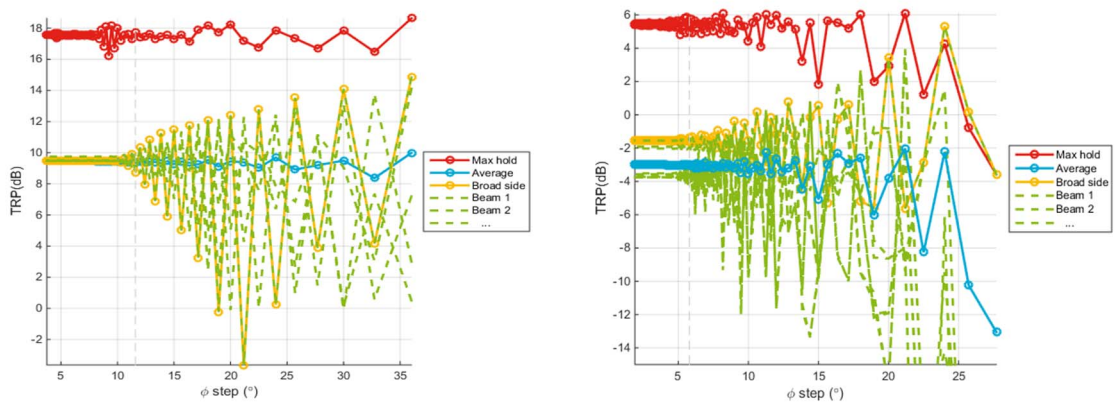

Figure D.2-3: Calculation of average EIRP in the azimuth cut by using different angular step sizes. The yellow curve corresponds to a fixed broadside beam (perpendicular to the *antenna array* surface), and all the green curves correspond to steered, but fixed beams. The variation in TRP for different beams at the harmonic is due to grating lobe effects

D.3 Measurement results

The effect of beam sweeping measured on an BS employing a 4x16 array, is depicted in figures D.3-2 and D.3-3. Measurements were performed in a CATR, in far-field conditions, with an BS that transmits one single beam that can be moved across a number of pre-defined directions. For the results using beam sweeping, see right figure in figure D.3-2, the following beam settings were used:

- 48 pre-defined beam directions (see fig. D.3-1) were swept, changing the beam direction every 15 us
- the range of beam directions is ± 60 and ± 15 ° in azimuth and elevation, respectively.
- The BS is making a full rotation (i.e. 360 °) mechanically into the horizontal plane, with a step of 1 °. Each position was held for about 1 s, while the spectrum analyser recorded a time averaged value of the received power (at least 1000 samples for each angular position were considered enough for good statistical average).

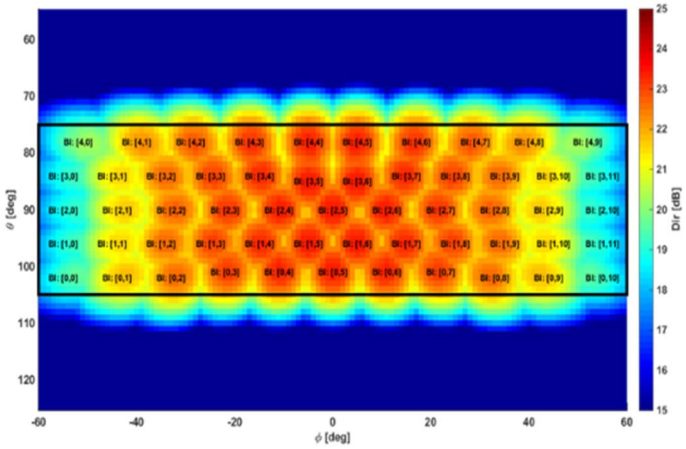

Figure D.3-1: Pre-defined possible directions of the main beam (red spots). Compared to the broadside beam (the middle one) the maximum supported steering is ± 60 ° in azimuth and ± 15 ° in elevation. The extreme directions are excluded in this experiment, so only 48 directions are swept

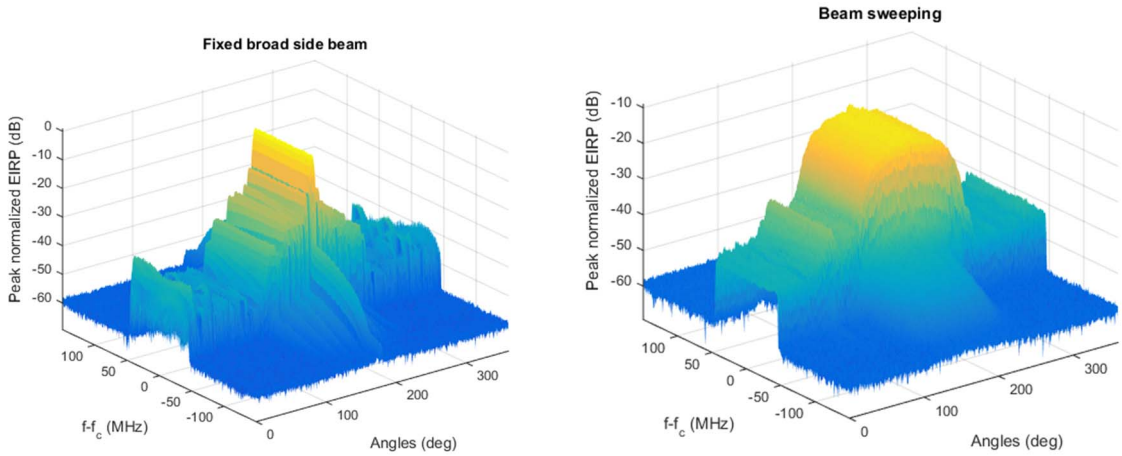

.

Figure D.3-2: EIRP values for measured data in a horizontal cut versus frequency (in relative scale)

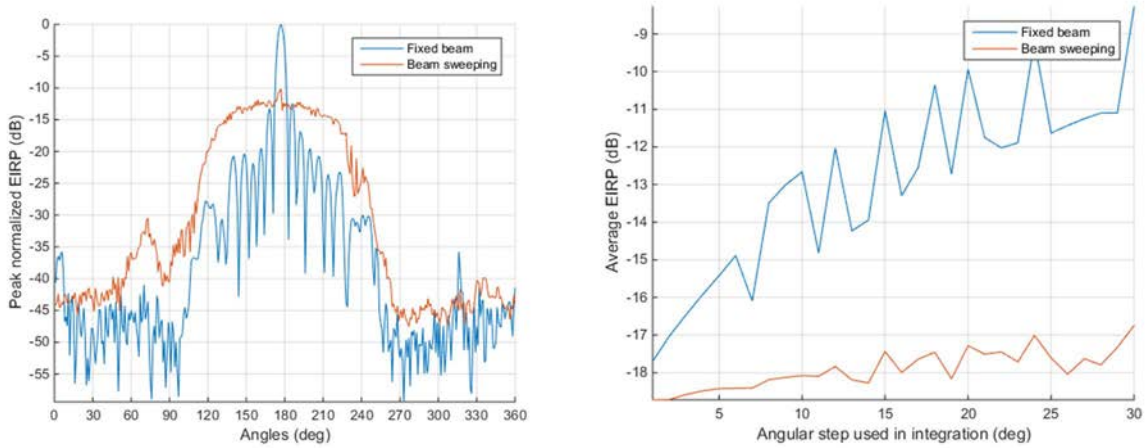

Figure D.3-3: To the left measured data for a horizontal cut are shown at a single frequency. A significantly broader pattern is detected for the beam sweeping signal (spectrum analyser in "Average" mode). To the right the angular average of the EIRP values are depicted for different angular step sizes

D.4 Design of beam sweeping test signal

The following design criteria have been identified:

1. Full transmit power is used for all beams.
2. Horizontal beam separation shall be the HPBW in the azimuth direction and the vertical beam separation shall be the HPBW in the vertical direction, evaluated for a broadside beam.
3. Lobes with high loss compared to the broadside beam are avoided. By loss we mean the reduction in beamforming gain between different positions of the beam).

The motivation for the third criterion is to have a fairly constant TRP for the used beams. The loss can be due to both loss in element pattern gain, but also due to adverse mutual coupling effects. Removing lobes with high loss gives a beam average TRP that is close to the TRP for any individual beam.

Annex E (informative): Sparse sampling for spurious emissions

In the case of spurious emissions for large BSs, such as the BS, the emissions do not necessarily radiate through the antenna elements. For this reason, to be on the conservative side, the entire BS dimensions should be considered when calculating the reference angular steps on the spherical grid.

The emission lobes will be narrow and hard to locate for some emissions, especially in the higher part of the spurious emissions domain. Instead of searching for the direction of the emission lobes, it is proposed to perform the measurement on a grid without alignment considerations and add a correction factor to the TRP obtained from the grid, to ensure overestimation. This correction factor is obtained through the study of random rotations of the BS.

In practice, the emissions are likely to have a low degree of correlation, except for harmonic emissions. For harmonic emissions a beam sweeping test signal is proposed in annex D and the description of such signal is not covered by the present release of this technical report.

For non-harmonic emissions, a correlation factor distributed uniformly in a given interval from 0 to $\rho_{\max}$ is assumed when calculating the correction factor ΔTRP for the $TRP_{Estimate}$. The angular variation of the emissions coming from low correlated sources is dominated by the *array factor*, i.e., the spatial distribution of the sources. Hence, emissions can be modelled by the *array factor* of a set of point sources, i.e., for simplicity the element pattern is isotropic. To quantify the degree of sparse sampling relative to the reference angular steps a Sparsity Factor (SF) is introduced. For a spherical equal angles grid

$$\mathrm{SF} = \max\left(\frac{\Delta\theta}{\Delta\theta_{\mathrm{ref}}}, \frac{\Delta\phi}{\Delta\phi_{\mathrm{ref}}}\right)$$

Where

$$\begin{cases} \Delta\theta_{\mathrm{ref}} = \lambda/D \\ \Delta\phi_{\mathrm{ref}} = \lambda/D_{\mathrm{cyl}} \end{cases}$$

The $TRP_{Estimate}$ values are then calculated by using a given angular grid defined by $\Delta\phi$ and $\Delta\theta$ which are larger than the reference angular steps $\Delta\phi_{ref}$ and $\Delta\theta_{ref}$. The CDF of these TRP values are then created and the CDF is shifted so that the 5th percentile corresponds to 0 dB TRP error. This shift is introduced as ΔTRP, see figure E-1.

In the followings we propose a method to estimate ΔTRP for large antennas (D > 4λ), based on generating a set of statistical samples of TRP values calculated on a set of randomly generated emission sources of a given size *D*.

In this investigation each statistical sample is generated as follows:

1. Set up a quadratic uniform linear NxN array in the yz-plane, with horizontal and vertical element separation

   N is randomly chosen such that the element separation is larger or equal to a half wave length.

2. Rotate the source points by an Euler zyz-rotation with angles a, b, and c which are uniformly chosen in the intervals [0,360], [0,90] and [0,360] degrees, respectively. The rotated position of source *n* is denoted $\vec{d}_n$

3. Pick a random correlation value ρ from the uniform distribution between 0 and $\rho_{\max}$, and generate source weights as

   $$w_n(\rho) = \sqrt{\rho} + \frac{(x_n + \mathrm{j}y_n)}{\sqrt{2}}\sqrt{1-\rho}$$

   Where $x_n, y_n \in N(0,1)$ are picked from a normal distribution with zero mean and unit standard deviation.

4. Normalize the weights to TRP = 1 by using a full sphere grid with sparsity factor 0.25.

5. Generate EIRP values on the desired grid by using an *array factor*

   $$\mathrm{EIRP}(\theta,\phi) = \left|\sum_{n=1}^{N} \mathrm{e}^{\mathrm{j}k\hat{r}(\theta,\phi)\cdot\vec{d}_n} w_n\right|^2$$

6. Calculate the TRP value as an appropriate mean value of the EIRP values for two/three cut grids and using full sphere numerical integration for the full sphere case.

There is publicly available Matlab code for sparse sampling analysis in [22] and more results can be found in publication in [10].

The resulting 5th percentile values of the empirical CDFs are used as a practical lower bound on the TRP calculated directly from the points in the actual grid. If the 5th percentile value is positive, there is no need for a systematic correction, that means ΔTRP = 0. On the other hand, if the 5th percentile value is negative, a systematic correction is needed to guarantee TRP overestimation with 95% confidence. For this purpose, the absolute value of the 5th percentile is used as systematic correction factor, denoted ΔTRP (see figure E-1). Some simulation results are found in figures E-2 (a) – (c) for two different choices of max correlation and the three grid types: full-sphere, three-cut, and two-cuts.

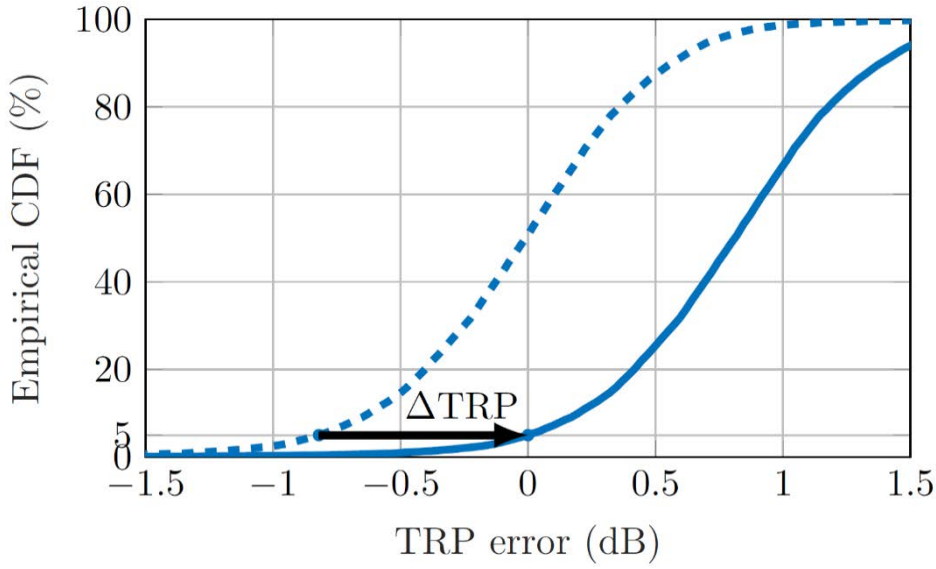

Figure E-1: Determination of ΔTRP based on the 5th percentile values. The dashed curve depicts the empirical CDF found from the statistical analysis, and the solid curve depicts the corrected CDF corresponding to over-estimation with 95% confidence

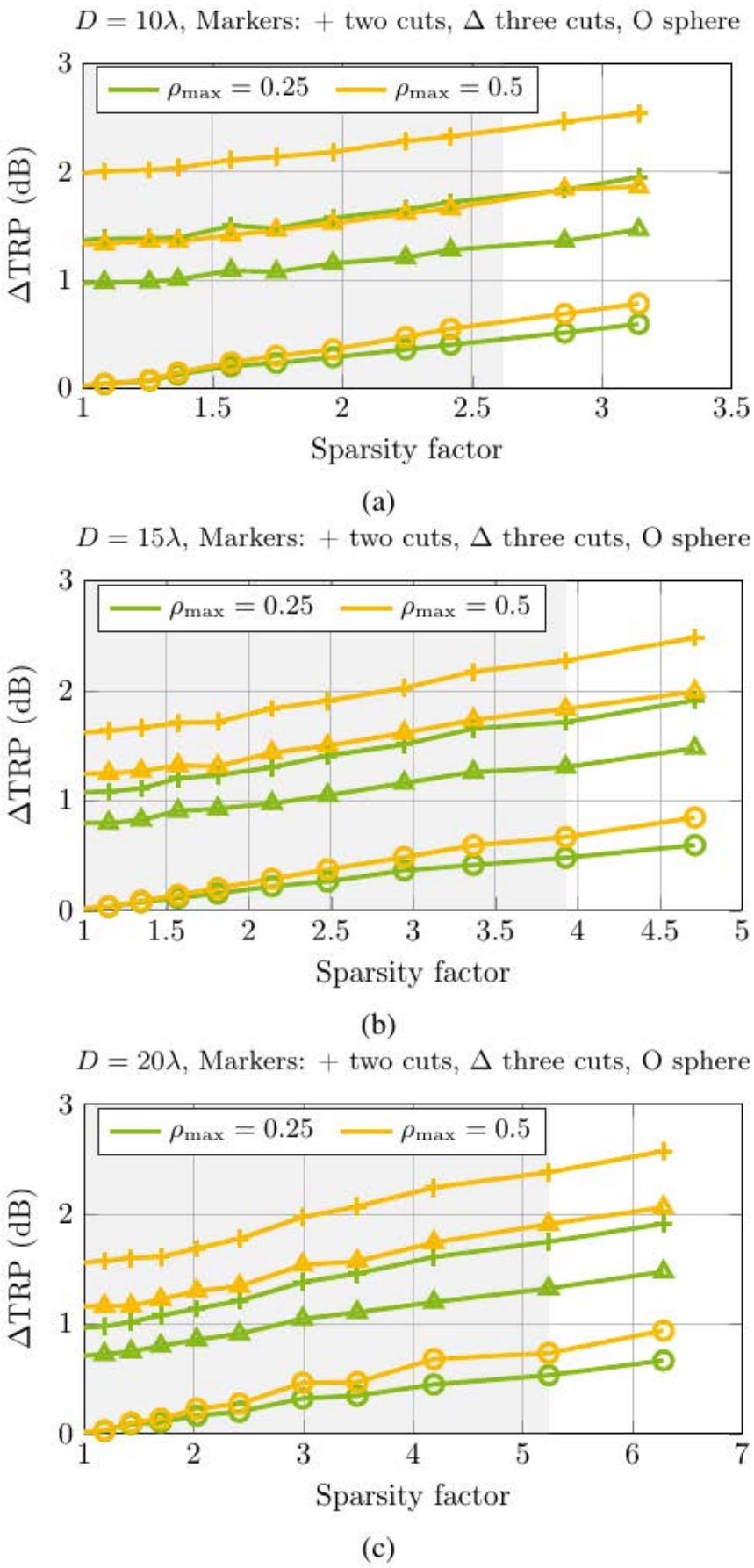

Figure E-2: Correction factor ΔTRP for 95% confidence overestimation of the TRP for three different electrical sizes D/λ and correlation intervals

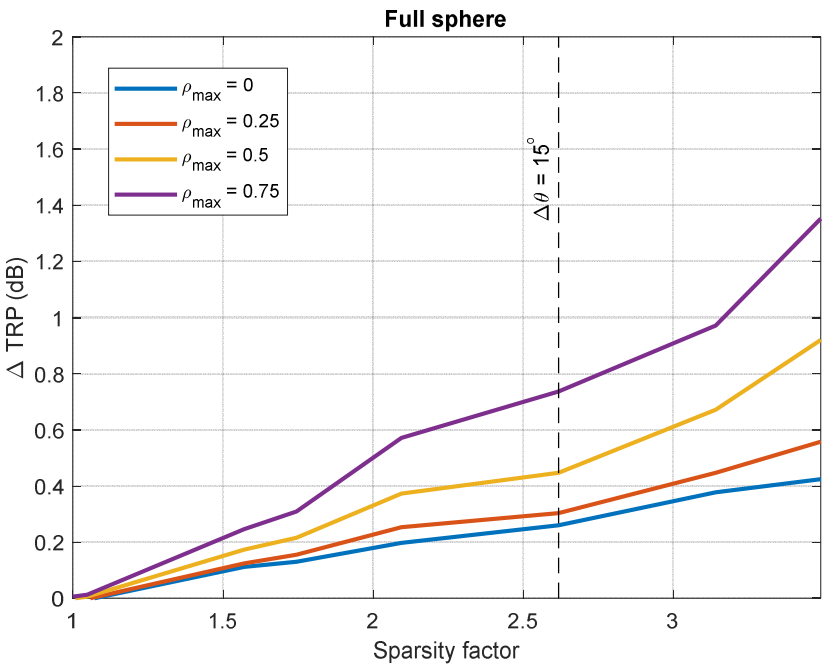

Figure E-3: Full sphere correction factors ΔTRP for max correlation up to 0.75 and D/λ=10

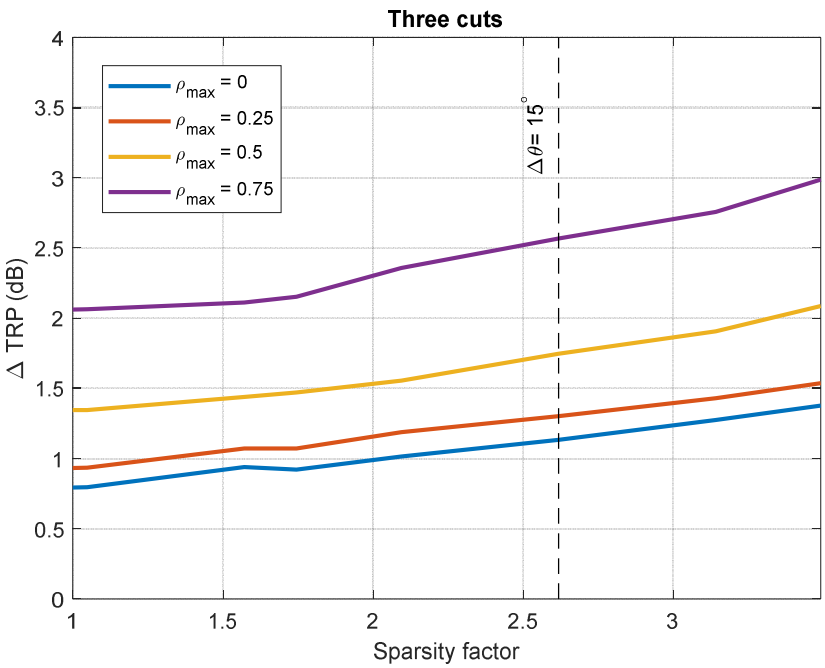

Figure E-4: Three cuts correction factors ΔTRP for max correlation up to 0.75 and D/λ=10

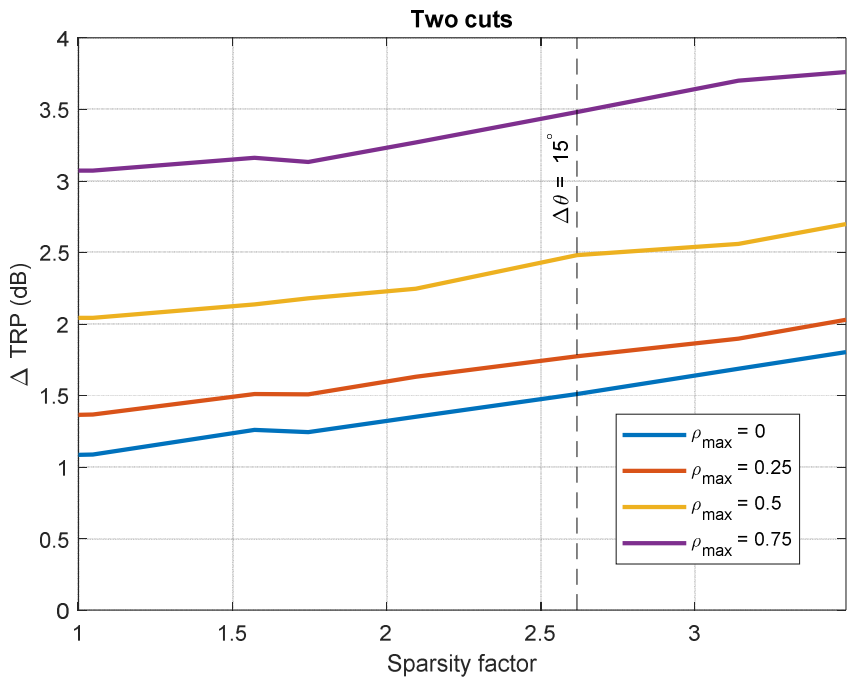

Figure E-5: Two cuts correction factors $\Delta\mathrm{TRP}$ for max correlation up to 0.75 and *D/λ=10*

The following systematic correction factors are proposed be used in the test procedure, given the results obtained for $\rho_{max} = 0.5$, which is considered to be acceptable at this point.

Table E-1: For a ful sphere sparse grid the proposed correction factor is zero for angular sampling below or equal to the reference steps (SF < 1). The maximum SF is the SF at 15 ° angular sampling

	Full-sphere sparse grid	Three cuts using reference angular steps	Two cuts using reference angular steps
Correction factor (dB)	(SF-1)/(SF_{max}-1)	2.0	2.5

Annex F (informative): Power density measurements close to BS

This annex contains guidelines for measurement of power density flux on a sphere surrounding the BS. The rationale for using a small test distance (compared to the far-field of BS) is that any amount of power that radiates from the BS also will radiate through any sphere enclosing the BS, i.e., energy conservation.

Power flux density based on measurement of tangential electric field components can be used for correct TRP assessment [31]. For accurate power density assessment, the following conditions need to be met:

1. The test distance shall be at least the far-field distance of the measurement antenna, i.e. $r_0 \geq 2D_{MA}^2 / \lambda$.
2. The measurement antenna shall sample an approximately constant field.
3. The test distance must be at least two wavelengths from the smallest sphere enclosing the BS.

The second criterion is quantified as:

$$r_0 \geq \frac{w}{\frac{\lambda}{2}}(R_{sph} + \lambda), \qquad \text{(F-1)}$$

where R_{sph} is the radius of the smallest sphere enclosing the BS. Furthermore, equstion (F-1) sets a minimum test distance for a given measurement antenna size *w* [31].

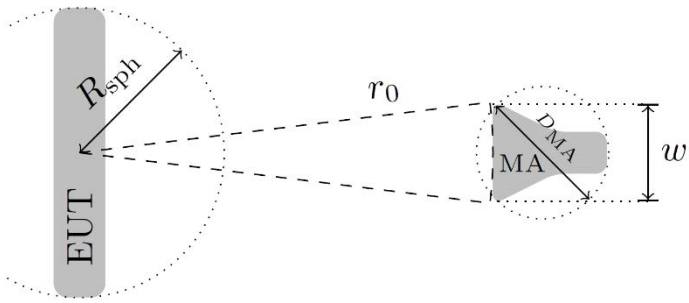

Figure F-1: The measurement distance and the dimensions of BS and MA

EXAMPLE: For assessing TRP using power density data close to BS, consider the patterns in Figure G-2, which are sampled at (a) 0.75 m, (b) 2.5 m and (c) 30 m from the same BS. The far-field distance of the BS is 30 m. The angular patterns vary with distance, but the full-sphere integration for TRP deviates less than 0.065 dB. The lower power density levels in the lower figure are balanced by the larger total area of the measurement sphere.

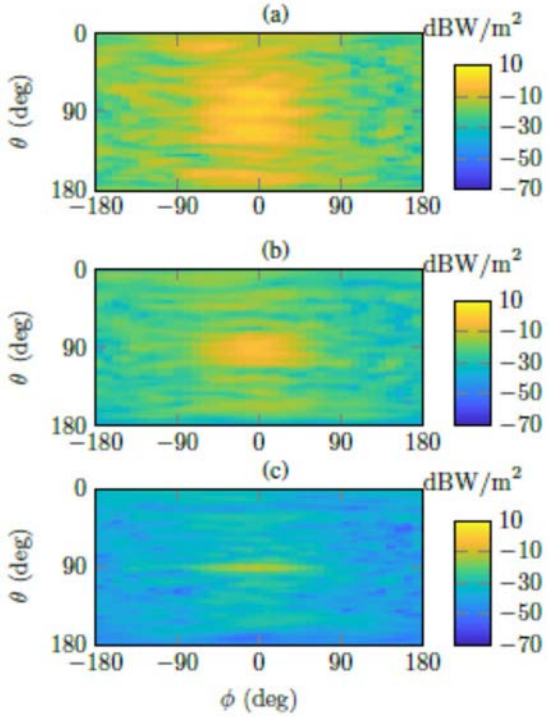

Figure F-2: Angular power density patterns measured at (a) 0.75 m, (b) 2.5 m and (c) 30 m from the BS [31]

Annex G (informative): Excel spreadsheets for MU derivation

This annex collects information on the Excel spreadsheets attached to this TR, which contain the MU derivation calculations.

Whenever the MU contributors, or MU values are corrected, or new OTA test method is added in this TR, the related Excel spreadsheet is expected to be also corrected in order to keep consistency among the TR and the Excel spreadsheet calculations.

The following Excel spreadsheets are attached to this TR:

1. Spreadsheet 1: FR1 transmitter requirements MU calculation tables
2. Spreadsheet 2: FR1 receiver requirements MU calculation tables
3. Spreadsheet 3: FR2 transmitter requirements MU calculation tables
4. Spreadsheet 4: FR2 receiver requirements MU calculation tables
5. Spreadsheet 5: FR1 co-location requirements MU calculation tables

Annex H (informative): Change history

Change history							
Date	**Meeting**	**TDoc**	**CR**	**Rev**	**Cat**	**Subject/Comment**	**New version**
2020-02	RAN4#94-e	R4-2001807				Skeleton	0.0.1
2020-04	RAN4#94-e	R4-2003997				First draft implementing TPs from RAN4#94-e meeting, based on content of R4-2002430.	0.1.0
2020-05	RAN4#94-e-Bis	R4-2005609				Implementation of the agreed TPs on top of version 0.1.0: - R4-2003998 TP to TR 37.941: general sections - R4-2004394 TP to TR 37.941 to introduce additional Tx test cases for PWS - R4-2004526 TP to TR 37.941 : Test uncertainty annexes - update - R4-2004531 TP to TR 37.941 -RX MU value derivation sub-clause 10 update (FR1) - R4-2004535 TP to TR 37.941 Tx TRP emissions MU value derivation sub-clause 11 updates (FR1) - R4-2004536 TP to TR 37.941: Tx TRP emissions MU value derivation sub-clause 11 updates (FR2) - R4-2004537 Spurious emissions MU value derivation sub-clause 12 update (FR1) - R4-2004538 TP to TR 37.941 - Spurious emissions MU value derivation sub-clause 12 update (FR2) - R4-2004641 TP to TR 37.941: cleanup - R4-2004643 TP to TR 37.941: reverberation chamber description correction - R4-2005502 Ambiguity on two orthogonal polarizations measurements - R4-2005503 TP to TR 37.941: Coordinate system - R4-2005504 TP to TR 37.941: conformance testing framework - R4-2005510 TP to TR 37.941: co-location measurements description - R4-2005511 TP to TR 37.941: Correction to reverberation description - R4-2005512 TP to TR 37.941: Improvement of text in subclause 6.3.2 - R4-2005601 TP to TR 37.941 -Tx MU value derivation sub-clause 9 update (FR1)	0.2.0
2020-06	RAN4#95-e	R4-2009064				Implementation of the approved TPs on top of version 0.2.0: - R4-2008858 TP to 37.941: MU tables for additional Tx test cases for PWS - R4-2007911 TP to TR 37.941 FR2 TX directional - R4-2007913 TP to TR 37.941 FR2 RX directional - R4-2008856 TP to TR 37.941 MU budget procedure update - R4-2008857 TP to TR 37.941 EIRP MU budget procedure update - R4-2008005 TP to TR 37.941 on editorial corrections for PWS references	0.3.0
2020-06	RAN#88-e	RP-200810				Final version of the Rel-15 TR for Approval.	2.0.0

Change history							
Date	**Meeting**	**TDoc**	**CR**	**Rev**	**Cat**	**Subject/Comment**	**New version**
2020-06	RAN#88					Approved by plenary – Rel-15 spec under change control	15.0.0
2020-06	RAN#88					Update to Rel-16 version	16.0.0
2020-06						Update of history table	16.0.1
2020-09	RAN#89	RP-201501	0003		A	CR to TR 37.941: Clause 6 Measurement Types	16.1.0
2020-09	RAN#89	RP-201501	0004		A	CR to TR 37.941: Clause 6.3.3 Angular alignment in TRP measurements	16.1.0
2020-09	RAN#89	RP-201501	0006	1	A	Mirror CR to TR 37.941: Completion of MU terms for PWS.	16.1.0
2020-09	RAN#89	RP-201501	0008		A	CR to TR 37.941: editorial cleanup, Rel-16	16.1.0
2020-09	RAN#89	RP-201501	0010		A	CR to TR 37.941: new Annex for Excel spreadsheets with MU derivation, Rel-16	16.1.0
2020-12	RAN#90	RP-202503	0014		A	CR to TR 37.941: overall TR cleanup, Rel-16	16.2.0
2020-12	RAN#90	RP-202503	0016		A	CR to TR 37.941: MU and TT values alignments and corrections, Rel-16	16.2.0
2020-12	RAN#90	RP-202503	0018		A	CR to TR 37.941: alignments and corrections to the MU contributors and MU derivations, Rel-16	16.2.0
2020-12	RAN#90	RP-202503	0020		A	CR to TR 37.941: Corrections to TRP measurement procedures	16.2.0
2020-12	RAN#90	RP-202503	0022		A	Mirror CR to TR 37.941: Additional test cases for PWS	16.2.0
2020-12	RAN#90	RP-202503	0024		A	Mirror CR to TR 37.941: Completion of MU terms for PWS.	16.2.0
2021-09	RAN#93	RP-211889	0028		F	Big CR for TR 37.941 Maintenance (Rel-16 CAT F)	16.3.0
2021-12	RAN#94	RP-212852	0029		F	Big CR for TR 37.941 maintenance (Rel-16, CAT F)	16.4.0
2023-06	RAN#100	RP-231352	0039		F	CR to TR 37.941: correction of n259-related frequency range for MU of the EIRP test requirement, Rel-16	16.5.0

History

Document history		
V16.0.1	September 2020	Publication
V16.1.0	November 2020	Publication
V16.2.0	January 2021	Publication
V16.3.0	October 2021	Publication
V16.4.0	March 2022	Publication
V16.5.0	July 2023	Publication