ETSI EN 301 349 V6.8.1 (2000-10)

European Standard (Telecommunications series)

Digital cellular telecommunications system (Phase 2+); General Packet Radio Service (GPRS); Mobile Station (MS) - Base Station System (BSS) interface; Radio Link Control/Medium Access Control (RLC/MAC) protocol (GSM 04.60 version 6.8.1 Release 1997)

GLOBAL SYSTEM FOR MOBILE COMMUNICATIONS

Reference
REN/SMG-020460Q6R4

Keywords
Digital cellular telecommunications system,
Global System for Mobile communications
(GSM), General Packet Radio Service (GPRS)

ETSI

650 Route des Lucioles
F-06921 Sophia Antipolis Cedex - FRANCE

Tel.: +33 4 92 94 42 00 Fax: +33 4 93 65 47 16

Siret N° 348 623 562 00017 - NAF 742 C
Association à but non lucratif enregistrée à la
Sous-Préfecture de Grasse (06) N° 7803/88

Important notice

Individual copies of the present document can be downloaded from:
http://www.etsi.org

The present document may be made available in more than one electronic version or in print. In any case of existing or perceived difference in contents between such versions, the reference version is the Portable Document Format (PDF). In case of dispute, the reference shall be the printing on ETSI printers of the PDF version kept on a specific network drive within ETSI Secretariat.

Users of the present document should be aware that the document may be subject to revision or change of status. Information on the current status of this and other ETSI documents is available at http://www.etsi.org/tb/status/

If you find errors in the present document, send your comment to:
editor@etsi.fr

Copyright Notification

No part may be reproduced except as authorized by written permission.
The copyright and the foregoing restriction extend to reproduction in all media.

© European Telecommunications Standards Institute 2000.
All rights reserved.

Contents

Intellectual Property Rights 10

Foreword 10

1 Scope 11

2 References 12

3 Definitions and abbreviations 13
3.1 Vocabulary 13

4 Layered overview of radio interface 14
4.1 Layer services 15
4.2 Layer functions 15
4.3 Service primitives 16
4.4 Services required from lower layers 16

5 Introduction to the Medium Access Control (MAC) procedures 16
5.1 General 16
5.2 Multiplexing principles 16
5.2.1 Temporary Block Flow 16
5.2.2 Temporary Flow Identity 16
5.2.3 Uplink State Flag 17
5.2.4 Medium Access modes 17
5.3 Packet idle mode 17
5.4 Packet transfer mode 17
5.5 General procedures in packet idle and packet transfer modes 18
5.5.1 Mobile station side 18
5.5.1.1 Cell reselection 18
5.5.1.2 System information on PBCCH 19
5.5.1.2.1 Supervision of PBCCH_CHANGE_MARK and update of PBCCH information 19
5.5.1.2.2 Replacement of PBCCH 20
5.5.1.2.3 PSI1 reception failure 20
5.5.1.3 System information on BCCH 20
5.5.1.3.1 Supervision of BCCH_CHANGE_MARK and update of BCCH information 20
5.5.1.3.2 Establishment of PBCCH 21
5.5.1.3.3 SI13 reception failure 21
5.5.1.4 Acquisition of system information on the broadcast channel 21
5.5.1.4.1 Consistent sets of system information messages 22
5.5.1.4.2 Suspension of operation to receive system information 22
5.5.1.4.3 Request for acquisition of system information 22
5.5.1.5 Discontinuous reception (DRX) 23
5.5.1.6 Page mode procedures on PCCCH 23
5.5.1.7 Frequency Parameters 24
5.5.1.8 TLLI management 25
5.5.2 Network side 25
5.5.2.1 System Information broadcasting 25
5.5.2.1.1 System information on PBCCH 25
5.5.2.1.2 System information on BCCH 25
5.5.2.1.3 System information on PACCH (and other logical channels) 26
5.5.2.1.4 Consistent sets of system information messages 26
5.5.2.2 Paging 27
5.6 Measurement reports 27
5.6.1 Network Control (NC) measurement reporting 27
5.6.2 Extended measurement (EM) reporting 28

6 Paging procedures 28
6.1 Paging procedure for RR connection establishment 28
6.1.1 Paging initiation using paging subchannel on CCCH 29
6.1.2 Paging initiation using paging subchannel on PCCCH 29

6.1.3 Paging initiation using PACCH 29
6.1.4 Paging response 29
6.2 Paging procedure for downlink packet transfer 29
6.2.1 Paging procedure using paging subchannel on CCCH 30
6.2.2 Paging using paging subchannel on PCCCH 30
6.2.3 Paging response 30

7 Medium Access Control (MAC) procedures on PCCCH 30
7.1 TBF establishment initiated by the mobile station on PCCCH 30
7.1.1 Permission to access the network 31
7.1.2 Initiation of a TBF establishment 31
7.1.2.1 Initiation of the packet access procedure 31
7.1.2.1.1 Access persistence control on PRACH 31
7.1.2.2 Packet assignment procedure 32
7.1.2.2.1 On receipt of a PACKET CHANNEL REQUEST message 32
7.1.2.2.2 Packet access queuing notification procedure 33
7.1.2.2.3 Packet polling procedure 34
7.1.2.2.4 Packet access reject procedure 34
7.1.2.3 Contention resolution at one phase access 35
7.1.2.4 One phase packet access completion 35
7.1.2.5 Timing Advance 35
7.1.3 TBF establishment using two phase access 35
7.1.3.1 Initiation of the Packet resource request procedure 36
7.1.3.2 Packet resource assignment for uplink procedure 36
7.1.3.2.1 On receipt of a PACKET RESOURCE REQUEST message 36
7.1.3.3 Contention resolution at two phase access 36
7.1.3.4 Two phase packet access completion 37
7.1.3.5 Timing Advance 37
7.1.4 Abnormal cases 37
7.2 TBF establishment initiated by the network on PCCCH 37
7.2.1 Entering the packet transfer mode 38
7.2.1.1 Packet downlink assignment procedure 38
7.2.1.2 Packet downlink assignment procedure completion 39
7.2.1.3 Packet polling procedure 39
7.2.2 Abnormal cases 39
7.3 Procedure for measurement report sending in packet idle mode 39
7.3.1 Measurement report sending procedure initiated on PCCCH 40
7.3.1.1 On receipt of a PACKET CHANNEL REQUEST message 40
7.3.1.2 On receipt of a PACKET UPLINK ASSIGNMENT message 40
7.3.1.3 On receipt of a PACKET ACCESS REJECT message 40
7.3.1.4 Abnormal cases 40
7.3.2 Measurement report sending procedure initiated on CCCH 41
7.4 Cell Change Order procedures in Packet Idle mode 41
7.4.1 Cell Change Order procedure initiated on PCCCH 41
7.4.2 Cell Change Order procedure initiated on CCCH 42
7.5 Measurement Order procedures in Packet Idle mode 42
7.5.1 Measurement Order procedures initiated on PCCCH 42
7.5.2 Measurement Order procedures initiated on CCCH 42

8 Medium Access Control (MAC) Procedures in Packet Transfer Mode 43
8.1 Transfer of RLC data blocks 43
8.1.1 Uplink RLC data block transfer 43
8.1.1.1 Dynamic allocation uplink RLC data block transfer 44
8.1.1.1.1 PACCH operation 45
8.1.1.1.2 Resource Reallocation for Uplink 45
8.1.1.1.2.1 Abnormal cases 46
8.1.1.1.3 Establishment of Downlink TBF 46
8.1.1.1.3.1 Abnormal cases 47
8.1.1.2 Extended Dynamic Allocation uplink RLC data block transfer 47
8.1.1.2.1 Uplink PDCH Allocation 47
8.1.1.2.2 PACCH operation 48
8.1.1.2.3 Neighbour cell power measurements 48

8.1.1.3 Fixed Allocation uplink RLC data block transfer 48
8.1.1.3.1 Transfer of RLC/MAC blocks 48
8.1.1.3.2 Reallocation for open-ended TBF 49
8.1.1.3.2.1 At the beginning of each fixed allocation 51
8.1.1.3.2.2 Upon receipt of the reallocation request 51
8.1.1.3.2.3 Upon exhaustion of the current allocation 51
8.1.1.3.2.4 Ending the TBF 51
8.1.1.3.2.5 Abnormal Cases 52
8.1.1.3.3 Neighbour cell power measurements 52
8.1.1.3.4 PACCH operation 52
8.1.1.3.5 Establishment of Downlink TBF 53
8.1.1.3.5.1 Abnormal cases 53
8.1.1.4 Network initiated release of uplink TBF 54
8.1.1.5 Abnormal cases 54
8.1.2 Downlink RLC data block transfer 55
8.1.2.1 Downlink RLC data block transfer 55
8.1.2.1.1 Abnormal cases 55
8.1.2.2 Polling for Packet Downlink Ack/Nack 56
8.1.2.3 Spare 56
8.1.2.4 Resource Reassignment for Downlink 56
8.1.2.4.1 Abnormal cases 57
8.1.2.5 Establishment of uplink TBF 57
8.1.2.5.1 Abnormal cases 58
8.1.2.6 Spare 59
8.1.2.7 Fixed allocation neighbour cell power measurements 59
8.1.2.8 Network initiated abnormal release of downlink TBF 59
8.1.3 Concurrent TBF procedures for half duplex operation 60
8.1.3.1 Spare 60
8.1.3.2 Spare 60
8.1.3.2.1 Saving downlink TBF state and initiating uplink TBF 60
8.1.3.2.2 Saving downlink TBF state and restoring uplink TBF state 60
8.1.3.2.3 Ending downlink TBF and restoring uplink TBF state 60
8.1.3.2.4 Saving uplink TBF state and initiating downlink TBF 60
8.1.3.2.5 Saving uplink TBF state and restoring downlink TBF state 60
8.1.3.2.6 Ending uplink TBF and restoring downlink TBF state 60
8.2 Packet PDCH Release 61
8.3 Procedure for measurement report sending in Packet Transfer mode 61
8.4 Network controlled cell reselection procedure 61
8.4.1 Network controlled cell reselection completion 62
8.4.2 Abnormal cases 62
8.5 Measurement Order procedures in Packet Transfer mode 62
8.6 PACKET CONTROL ACKNOWLEDGEMENT 63
8.7 Abnormal cases 63
8.7.1 Abnormal release with return to CCCH or PCCCH 63
8.7.2 Abnormal release with random access 63
8.7.3 Abnormal release with system information 64

9 Radio Link Control (RLC) procedures in packet transfer mode 64
9.1 Procedures and parameters for peer-to-peer operation 64
9.1.1 Send state variable V(S) 64
9.1.1a Control send state variable V(CS) 64
9.1.2 Acknowledge state variable V(A) 65
9.1.3 Acknowledge state array V(B) 65
9.1.4 Block sequence number BSN 65
9.1.4a Reduced Block Sequence Number RBSN 65
9.1.5 Receive state variable V(R) 65
9.1.6 Receive window state variable V(Q) 66
9.1.7 Receive state array V(N) 66
9.1.8 Starting sequence number (SSN) and received block bitmap (RBB) 66
9.1.9 Window Size 67
9.1.10 Segmentation of LLC PDUs into RLC data units 67
9.1.11 Re-assembly of LLC PDUs from RLC data units 67

9.1.11a Segmentation of RLC/MAC control messages into RLC/MAC control blocks 68
9.1.11b Re-assembly of RLC/MAC control messages from RLC/MAC control blocks 68
9.1.12 Priority of LLC PDUs 69
9.2 Operation during RLC/MAC control message transfer 69
9.3 Operation during RLC data block transfer 69
9.3.1 Countdown procedure 69
9.3.2 Acknowledged mode operation 70
9.3.2.1 Establishment of Temporary Block Flow 70
9.3.2.2 Operation of uplink Temporary Block Flow 70
9.3.2.3 Release of uplink Temporary Block Flow 71
9.3.2.4 Operation of downlink Temporary Block Flow 71
9.3.2.5 Release of downlink Temporary Block Flow 72
9.3.3 Unacknowledged mode operation 72
9.3.3.1 Establishment of Temporary Block Flow 72
9.3.3.2 Operation of uplink Temporary Block Flow 72
9.3.3.3 Release of uplink Temporary Block Flow 73
9.3.3.4 Operation of downlink Temporary Block Flow 73
9.3.3.5 Release of downlink Temporary Block Flow 74
9.4 Abnormal release cases 74
9.4.1 Abnormal release with random access 74
9.4.2 Abnormal release with cell reselection 74

10 RLC/MAC block structure 75
10.1 Spare bits 75
10.2 RLC data blocks 75
10.2.1 Downlink RLC data block 75
10.2.2 Uplink RLC data block 76
10.3 RLC/MAC control blocks 76
10.3.1 Downlink RLC/MAC control block 76
10.3.2 Uplink RLC/MAC control block 77
10.4 Header fields 77
10.4.1 Uplink state flag (USF) field 77
10.4.2 Retry (R) bit 77
10.4.3 Stall indicator (SI) bit 78
10.4.4 Supplementary/Polling (S/P) Bit 78
10.4.5 Relative Reserved Block Period (RRBP) field 78
10.4.6 Countdown Value (CV) field 79
10.4.7 Payload Type field 79
10.4.8 Final block indicator (FBI) bit 79
10.4.9 TLLI Indicator (TI) bit 79
10.4.9a Address Control (AC) bit 80
10.4.9b Final Segment (FS) bit 80
10.4.9c Radio Transaction Identifier (RTI) field 80
10.4.9d Direction (D) bit 80
10.4.10 Temporary Flow Identity (TFI) field 80
10.4.10a Power Reduction (PR) field 80
10.4.11 Extension (E) Bit 81
10.4.12 Block Sequence Number (BSN) field 81
10.4.12a Reduced Block Sequence Number (RBSN) bit 81
10.4.13 More (M) bit 82
10.4.14 Length Indicator (LI) field 82
10.4.15 TLLI field 82
10.4.16 RLC data field 82
10.4.17 Control message contents field 83

11 Message functional definitions and contents 83
11.1 Handling of erroneous protocol data 83
11.1.1 Message classification 84
11.1.1.1 Distribution messages 84
11.1.1.2 Non-distribution messages 84
11.1.1.2.1 Format of the address information 85
11.1.2 Error detection mechanism 85

11.1.3 Error labels....85
11.1.3.1 Generic error labels....85
11.1.3.2 'Ignore' error label....86
11.1.3.3 'Message escape' error label....86
11.1.4 Error detection and order of precedence....86
11.1.4.1 Unknown message type....87
11.1.4.2 Message not compatible with current protocol state....87
11.1.4.3 Syntactically incorrect message....87
11.1.4.3.1 Messages with error label: 'Distribution part error'....87
11.1.4.3.2 Messages with error label: 'Address information part error'....87
11.1.4.3.3 Messages with error label: 'Non-distribution part error'....88
11.1.4.3.4 Messages with error label: 'Message escape'....88
11.1.4.3.5 Messages with error label: 'Ignore'....88
11.1.4.4 Syntactic error in truncated concatenation....88
11.1.4.5 Exceptions....88
11.2 RLC/MAC control messages....88
11.2.0 Message format....89
11.2.0.1 Downlink RLC/MAC messages....89
11.2.0.2 Uplink RLC/MAC messages....90
11.2.1 Packet Access Reject....91
11.2.2 Packet Control Acknowledgement....92
11.2.3 Packet Cell Change Failure....93
11.2.4 Packet Cell Change Order....94
11.2.5 Packet Channel Request....96
11.2.6 Packet Downlink Ack/Nack....98
11.2.7 Packet Downlink Assignment....100
11.2.8a Void....103
11.2.8 Packet Downlink Dummy Control Block....103
11.2.8b Packet Uplink Dummy Control Block....104
11.2.9 Packet Measurement Report....105
11.2.9a Void....107
11.2.9b Packet Measurement Order....107
11.2.9c Packet Mobile TBF Status....111
11.2.10 Packet Paging Request....111
11.2.11 Packet PDCH Release....113
11.2.12 Packet Polling Request....114
11.2.13 Packet Power Control/Timing Advance....114
11.2.14 Packet PRACH Parameters....115
11.2.15 Packet Queueing Notification....116
11.2.16 Packet Resource Request....116
11.2.17 Packet PSI Status....119
11.2.18 Packet System Information Type 1....121
11.2.19 Packet System Information Type 2....122
11.2.19.1 Reference Frequency Lists in PSI2....125
11.2.19.2 Cell Allocation in PSI2....125
11.2.19.3 GPRS Mobile Allocation in PSI2....125
11.2.19.4 PCCCH Description....125
11.2.19.5 Abnormal cases....125
11.2.20 Packet System Information Type 3....126
11.2.21 Packet System Information Type 3 bis....132
11.2.22 Packet System Information Type 4....134
11.2.23 Packet System Information Type 5....136
11.2.24 Spare....139
11.2.25 Packet System Information 13....140
11.2.26 Packet TBF Release....143
11.2.27 Spare....143
11.2.28 Packet Uplink Ack/Nack....144
11.2.29 Packet Uplink Assignment....146
11.2.30 Spare....151
11.2.31 Packet Timeslot Reconfigure....151

12 Information element coding 156
12.1 Overview 156
12.2 Spare 156
12.3 Ack/Nack Description 156
12.4 ALLOCATION_BITMAP 157
12.5 Spare 157
12.6 Spare 157
12.7 Channel Request Description 158
12.8 Frequency Parameters 158
12.8.1 Abnormal cases 160
12.9 Global Power Control Parameters 161
12.10 Global TFI 162
12.10a GPRS Mobile Allocation 163
12.10a.1 Abnormal cases 164
12.11 Packet Request Reference 164
12.12 Packet Timing Advance 165
12.12a Global Packet Timing Advance 166
12.13 Power Control Parameters 167
12.14 PRACH Control Parameters 168
12.15 Temporary Flow Identity (TFI) 170
12.16 Temporary Logical Link Identity (TLLI) 170
12.17 Temporary Queueing Identifier (TQI) 170
12.18 TIMESLOT_ALLOCATION 170
12.19 TS_OVERRIDE 171
12.20 PAGE_MODE 171
12.21 Starting Frame Number Description 171
12.21.1 Absolute Frame Number Encoding 171
12.21.2 Relative Frame Number Encoding 172
12.22 Spare 172
12.23 Cell Identification 172
12.24 GPRS Cell Options 173
12.25 PCCCH Organization Parameters 175
12.26 Extension Bits IE 175
12.27 Non GPRS Cell Options IE 176

13 Timers and counters 177
13.1 Timers on the Mobile Station side 177
13.2 Timers on the network side 181
13.3 Counters on the Mobile Station side 182
13.4 Counters on the Network side 182

Annex A (informative): Bibliography 183

Annex B (informative): RLC data block encoding 184

B.1 Example 1 184

B.2 Example 2 184

B.3 Example 3 185

B.4 Example 4 185

B.5 Example 5 186

B.6 Example 6 186

B.7 Example 7 187

Annex C (informative): Message Sequence Diagrams 188

Annex D (informative): Examples of Fixed Allocation Timeslot Assignment 189

Annex E (informative): Repeated Fixed Allocations 193

Annex F (informative): Examples of Countdown procedure operation 195

F.1 Example 1 195

F.2 Example 2 195

F.3 Example 3 196

Annex G (informative): Handling of erroneous protocol data, examples 197

G.1 Application of error labels 197

G.2 Application of the 'Message escape' error label 197

G.3 Application of truncated concatenation including 'padding bits' 198

G.4 Message extension using 'padding bits' 199

Annex H (informative): Document change History 200

History 208

Intellectual Property Rights

IPRs essential or potentially essential to the present document may have been declared to ETSI. The information pertaining to these essential IPRs, if any, is publicly available for **ETSI members and non-members**, and can be found in ETSI SR 000 314: *"Intellectual Property Rights (IPRs); Essential, or potentially Essential, IPRs notified to ETSI in respect of ETSI standards"*, which is available from the ETSI Secretariat. Latest updates are available on the ETSI Web server (http://www.etsi.org/ipr).

Pursuant to the ETSI IPR Policy, no investigation, including IPR searches, has been carried out by ETSI. No guarantee can be given as to the existence of other IPRs not referenced in ETSI SR 000 314 (or the updates on the ETSI Web server) which are, or may be, or may become, essential to the present document.

Foreword

This European Standard (Telecommunications series) has been produced by ETSI Technical Committee Special Mobile Group (SMG).

The present document specifies the procedures used at the radio interface (Reference Point Um, see GSM 04.02) for the General Packet Radio Service (GPRS) Medium Access Control /Radio Link Control (MAC/RLC) layer within the digital cellular telecommunications system (Phase 2+).

The contents of the present document are subject to continuing work within SMG and may change following formal SMG approval. Should SMG modify the contents of the present document it will then be re-submitted for OAP with an identifying change of release date and an increase in version number as follows:

Version 6.x.y

where:

6 indicates GSM Release 1997 of Phase 2+

x the second digit is incremented for changes of substance, i.e. technical enhancements, corrections, updates, etc.

y the third digit is incremented when editorial only changes have been incorporated in the specification.

National transposition dates	
Date of adoption of the present document:	29 September 2000
Date of latest announcement of the present document (doa):	31 December 2000
Date of latest publication of new National Standard or endorsement of the present document (dop/e):	30 June 2001
Date of withdrawal of any conflicting National Standard (dow):	30 June 2001

1 Scope

The present document specifies the procedures used at the radio interface (Reference Point Um, see GSM 04.02) for the General Packet Radio Service (GPRS) Medium Access Control /Radio Link Control (MAC/RLC) layer.

When the notations for "further study" or "FS" or "FFS" are present in the present document they mean that the indicated text is not a normative portion of the present document.

The present document is applicable to the following GPRS Um functional layers:

- Radio Link Control functions;
- Medium Access Control functions; and
- Physical Link Control functions.

The procedures described in the present document are for the RLC/MAC functions of the GPRS radio interface (Um) when operating on a Packet Data Channel (PDCH).

GSM 03.64 contains an overview of the GPRS radio interface (Um).

GSM 04.03 and GSM 04.04 contains the definition of the control channels used in the present document.

GSM 04.07 contains a description in general terms of the structured functions and procedures of this protocol and the relationship of this protocol with other layers and entities.

GSM 04.08 contains the definition of GPRS RLC/MAC procedures when operating on the Common Control Channel (CCCH).

GSM 04.64 contains functional procedures for the Logical Link Control (LLC) layer.

Application to interface structure

The RLC/MAC procedures apply to the interface structures defined in GSM 04.03. They use the functions and services provided by layer 1 defined in GSM 04.04. GSM 04.07 gives the general description of layer 3 including procedures, messages format and error handling.

Test procedures

Test procedures of the GSM radio interface signalling are described in GSM 11.10 and GSM 11.2x series.

Use of logical control channels

The logical control channels are defined in GSM 05.02. Two similar sets of logical channels are defined. The first set consists of the logical channels:

- Broadcast Control Channel (BCCH): downlink only, used to broadcast Cell specific information;
- Paging Channel (PCH): downlink only, used to send page requests to Mobile Stations (MSs);
- Random Access Channel (RACH): uplink only, used to request GPRS resources or a Dedicated Control Channel;
- Access Grant Channel (AGCH): downlink only, used to allocate GPRS resources or a Dedicated Control Channel;
- The second set consists of the logical channels:
- Packet Broadcast Control Channel (PBCCH): downlink only, used to broadcast Cell specific information;
- Packet Paging Channel (PPCH): downlink only, used to send page requests to Mobile Stations (MSs);
- Packet Random Access Channel (PRACH): uplink only, used to request GPRS resources;
- Packet Access Grant Channel (PAGCH): downlink only, used to allocate GPRS resources;

- Packet Associated Control Channel (PACCH): bi-directional, associated with a Temporary Block Flow (TBF);
- Packet Timing advance control channel uplink (PTCCH/U): used to transmit random access bursts to allow estimation of the timing advance for one MS in transfer state;
- Packet Timing advance control channel downlink (PTCCH/D): used to transmit timing advance updates for several MS. One PTCCH/D is paired with several PTCCH/U's.

2 References

The following documents contain provisions which, through reference in this text, constitute provisions of the present document.

- References are either specific (identified by date of publication, edition number, version number, etc.) or non-specific.
- For a specific reference, subsequent revisions do not apply.
- For a non-specific reference, the latest version applies.
- A non-specific reference to an ETS shall also be taken to refer to later versions published as an EN with the same number.
- For this Release 1997 document, references to GSM documents are for Release 1997 versions (version 6.x.y).

[1] GSM 01.04: "Digital cellular telecommunications system (Phase 2+); Abbreviations and acronyms".

[2] GSM 02.60: "Digital cellular telecommunications system (Phase 2+); Stage 1 Service Description of the General Packet Radio Service (GPRS)".

[3] GSM 03.03: "Digital cellular telecommunications system (Phase 2+); Numbering, addressing and identification".

[4] GSM 03.13: "Digital cellular telecommunications system (Phase 2+); Discontinuous Reception (DRX) in the GSM system".

[5] GSM 03.64: "Digital cellular telecommunications system (Phase 2+); General Packet Radio Service (GPRS);Overall description of GPRS radio Interface; Stage 2".

[6] GSM 04.02: "Digital cellular telecommunications system (Phase 2+); GSM Public Land Mobile Network (PLMN) access reference configuration".

[7] GSM 04.03: "Digital cellular telecommunications system (Phase 2+); Mobile Station - Base Station System (MS - BSS) interface Channel structures and access capabilities".

[8] GSM 04.04: "Digital cellular telecommunications system (Phase 2+); Layer 1 General requirements".

[9] GSM 04.05: "Digital cellular telecommunications system (Phase 2+); Data Link (DL) layer General aspects".

[10] GSM 04.07: "Digital cellular telecommunications system (Phase 2+); Mobile radio interface signalling layer 3 General aspects".

[11] GSM 04.08: "Digital cellular telecommunications system (Phase 2+);Mobile radio interface layer 3 specification".

[12] GSM 04.64: "Digital cellular telecommunications system (Phase 2+); General Packet Radio Service (GPRS); Logical Link Control (LLC)".

[13] GSM 05.02: "Digital cellular telecommunications system (Phase 2+); Multiplexing and multiple access on the radio path".

[14] GSM 05.03: "Digital cellular telecommunications system (Phase 2+); Channel coding".

[15] GSM 05.08: "Digital cellular telecommunications system (Phase 2+); Radio subsystem link control".

[16] GSM 05.10: "Digital cellular telecommunications system (Phase 2+); Radio subsystem synchronisation".

[17] GSM 11.10: "Digital cellular telecommunications system (Phase 2+); Mobile Station (MS) conformity specification".

[18] GSM 11.21: "Digital cellular telecommunications system (Phase 2); The GSM Base Station System (BSS) equipment specification".

3 Definitions and abbreviations

Abbreviations used in the present document are listed in GSM 01.04 and GSM 02.60.

3.1 Vocabulary

For the purposes of the present document, the following terms and definitions apply.

Block period: A block period is the sequence of four timeslots on a PDCH used to convey one radio block.

GPRS multislot class: The term GPRS multislot class refers to the different mobile station capabilities to transmit and receive on different combinations of multiple PDCHs. The multislot classes are defined in GSM 05.02. Note that the mobile station may indicate different multislot classes for circuit mode services and for GPRS (see GSM 04.08). Different multislot class mobile stations are capable of supporting different medium access modes (see subclause 5.2.4).

Packet idle mode: In packet idle mode, the mobile station is prepared to transfer LLC PDUs on packet data physical channels (see subclause 5.3). The mobile station is not allocated any radio resource on a packet data physical channel; it listens to the PBCCH and PCCCH or, if those are not provided by the network, to the BCCH and the CCCH.

Packet transfer mode: In packet transfer mode, the mobile station is prepared to transfer LLC PDUs on packet data physical channels (see subclause 5.4). The mobile station is allocated radio resource on one or more packet data physical channels for the transfer of LLC PDUs.

Radio block: A radio block is the sequence of four normal bursts carrying one RLC/MAC protocol data unit (see GSM 04.04). (The one exception is a radio block occasionally used on PACCH consisting of a sequence of four access bursts, each carrying a repetition of one short RLC/MAC block.)

Random values: In a number of places in this Technical Specification, it is mentioned that some value must take a "random" value, in a given range, or more generally with some statistical distribution. For such random values refer to GSM 04.08.

RLC/MAC block: A RLC/MAC block is the protocol data unit exchanged between RLC/MAC entities (see clause 10 and GSM 04.04).

RLC/MAC control block: A RLC/MAC control block is the part of a RLC/MAC block carrying a control message between RLC/MAC entities (see subclause 10.3).

RR connection: An RR connection is a physical connection established between a mobile station and the network to support the upper layers' exchange of information flows. An RR connection is maintained and released by the two peer entities.

RLC data block: A RLC data block is the part of a RLC/MAC block carrying user data or upper layers' signalling data (see subclause 10.2).

TBF abort: The term "abort" as applied to TBF is used when the TBF is abruptly stopped without using the Release of TBF procedures defined in clause 9.

TBF release: The term "release" as applied to TBF is used when the TBF is stopped using one of the Release of TBF procedures defined in clause 9.

Temporary Block Flow (TBF): A Temporary Block Flow (TBF) is a physical connection used by the two RR peer entities to support the unidirectional transfer of LLC PDUs on packet data physical channels (see subclause 5.2.1).

Timer Expiry: A started timer has run the time specified.

Timer Restart: A timer that may already be running is stopped and then started again to run the time specified.

Timer Start: A timer is started to run the time specified.

Timer Stop: A started timer is stopped and its value is then undefined.

Uplink State Flag (USF): The Uplink State Flag (USF) is used on PDCH channel(s) to allow multiplexing of uplink Radio blocks from different mobile stations (see subclause 5.2.3, clause 10 and GSM 05.02).

4 Layered overview of radio interface

The Radio Resource sublayer provides the functions necessary for:

- Radio Resource (RR) management of packet data physical channels (PDCHs); and
- Radio Link Control and Medium Access Control (RLC/MAC) on packet data physical channels.

As shown in figure 1, the RR sublayer provides services to the MM and LLC sublayers. The RR sublayer utilises the services of the Data Link layer (signalling layer 2) and the Physical Link layer. The packet logical channels PBCCH, PCCCH (including PPCH, PAGCH and PRACH), PACCH and PDTCH, are multiplexed onto the packet data physical channels on a per radio block basis.

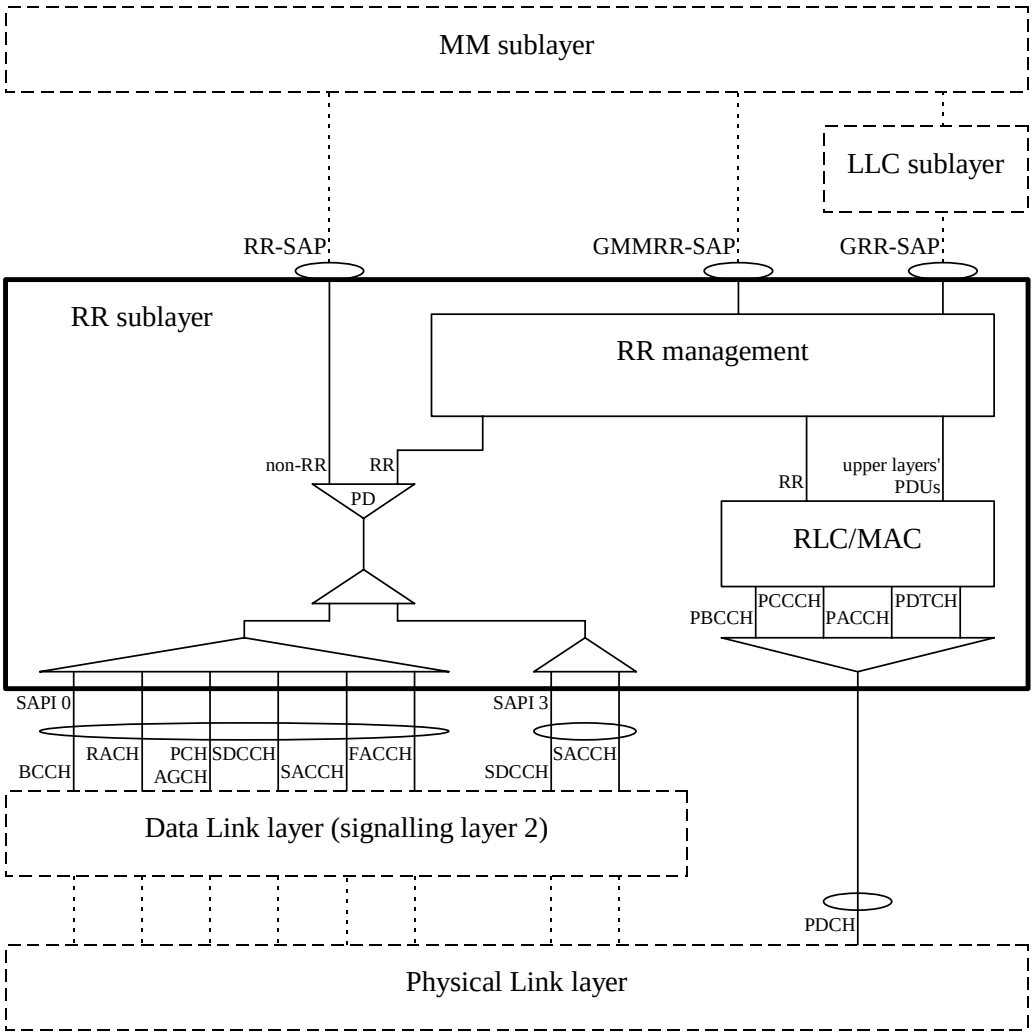

Figure 1: Protocol architecture of Radio Resource (RR) sublayer and RLC/MAC function

4.1 Layer services

The RR sublayer provides services for the transfer of upper layer PDUs using a shared medium between multiple mobile stations and the network. Direct communication is only possible between the network and one or more mobile stations. The RLC/MAC function supports two modes of operation:

- unacknowledged operation; and
- acknowledged operation.

The RR sublayer further provides services for the paging of mobile stations.

4.2 Layer functions

The RLC function defines the procedures for segmentation and reassemble of LLC PDUs into RLC/MAC blocks and, in RLC acknowledged mode of operation, for the Backward Error Correction (BEC) procedures enabling the selective retransmission of unsuccessfully delivered RLC/MAC blocks. In RLC acknowledged mode of operation, the RLC function preserves the order of higher layer PDUs provided to it.

The MAC function defines the procedures that enable multiple mobile stations to share a common transmission medium, which may consist of several physical channels. The function may allow a mobile station to use several physical channels in parallel, i.e. use several timeslots within the TDMA frame.

For the mobile station originating access, the MAC function provides the procedures, including the contention resolution procedures, for the arbitration between multiple mobile stations simultaneously attempting to access the shared transmission medium.

For the mobile station terminating access, the MAC function provides the procedures for queuing and scheduling of access attempts.

4.3 Service primitives

Information flow between layers is performed by the use of Service Primitives. Service Access Points (SAP) and their corresponding Service Primitives for the RR sublayer are defined in GSM 04.07.

4.4 Services required from lower layers

The RLC/MAC function uses the services provided by the physical link layer as defined in GSM 04.04.

The RR sublayer may use the services provided by the data link layer as defined in GSM 04.05. Moreover, the RR sublayer directly uses services provided by the physical layer such as BCCH searching, as defined in GSM 04.04.

5 Introduction to the Medium Access Control (MAC) procedures

5.1 General

The Medium Access Control procedures include the functions related to the management of the shared transmission resources, e.g. the packet data physical channels and the radio link connections on packet data physical channels.

The Medium Access Control procedures support the provision of Temporary Block Flows (TBFs) that allow the point-to-point transfer of signalling and user data within a cell between the network and a mobile station.

Moreover, the Medium Access Control procedures include the procedures for reception of PBCCH and PCCCH, which permits autonomous cell reselection performed by the mobile station (see GSM 05.08).

5.2 Multiplexing principles

5.2.1 Temporary Block Flow

A Temporary Block Flow (TBF) is a physical connection used by the two RR entities to support the unidirectional transfer of LLC PDUs on packet data physical channels. The TBF is allocated radio resource on one or more PDCHs and comprises a number of RLC/MAC blocks carrying one or more LLC PDUs. A TBF is temporary and is maintained only for the duration of the data transfer (i.e. until there are no more RLC/MAC blocks to be transmitted and, in RLC acknowledged mode, all of the transmitted RLC/MAC blocks have been successfully acknowledged by the receiving entity).

5.2.2 Temporary Flow Identity

Each TBF is assigned a Temporary Flow Identity (TFI) by the network. The mobile station shall assume that the TFI value is unique among concurrent TBFs in the same direction (uplink or downlink)) on all PDCHs used for the TBF. The same TFI value may be used concurrently for TBFs on other PDCHs in the same direction and for TBFs in the opposite direction.

An RLC/MAC block associated with a certain TBF shall comprise a TFI. The TBF is identified by the TFI together with, in case of a RLC data block, the direction (uplink or downlink) in which the RLC data block is sent; and in case of a RLC/MAC control message, the direction in which the RLC/MAC control message is sent and the message type.

Global_TFI is used to unambiguously identify the mobile station during packet transfer mode in an uplink or downlink RLC/MAC control message. If present, the Global TFI addresses the MS using either the uplink TFI or downlink TFI of the MS. Which TFI is used is at the discretion of the sender except where explicitly defined by procedure.

5.2.3 Uplink State Flag

An Uplink State Flag (USF) is included in the header of each RLC/MAC block on a downlink PDCH, as specified in clause 10. It may be used by the network to control the multiplexing of different mobile stations on uplink PDCH. The use of USF is further specified in GSM 05.02.

5.2.4 Medium Access modes

Three medium access modes are supported:

- Dynamic Allocation characterised by that the mobile station detecting an assigned USF value for each assigned PDCH and block or group of four blocks that it is allowed to transmit on that PDCH (see subclause 8.1.1.1);

- Extended Dynamic Allocation characterised by the mobile station detecting an assigned USF value for any assigned PDCH allowing the mobile station to transmit on that PDCH and all higher numbered assigned PDCHs in the same block or group of four blocks (see subclause 8.1.1.2); and

- Fixed Allocation characterised by fixed allocation of radio blocks and PDCHs in the assignment message without an assigned USF (see subclause 8.1.1.3). Fixed Allocation may operate in half duplex mode, characterised by that downlink and uplink TBF are not active at the same time. Half duplex mode is only applicable for multislot classes 19 to 29.

Either the Dynamic Allocation medium access mode or Fixed Allocation medium access mode shall be supported by all networks that support GPRS. The support of Extended Dynamic Allocation is optional for the network.

The Dynamic Allocation and Fixed Allocation modes shall be supported in all mobile stations. The support of Extended Dynamic Allocation is mandatory for mobile stations of multislot classes 22, 24, 25 and 27. The support of Extended Dynamic Allocation for mobile stations of all other multislot classes are optional and shall be indicated in the MS Radio Access Capability.

The network shall ensure that the medium access mode and the resource allocation used for a mobile station is compatible with the multislot class of the mobile station (the mobile station MS multislot class is defined in GSM 05.02).

In the case of a downlink transfer, the term medium access mode refers to the measurement time scheduling, for the MS to perform neighbour cell power measurements (see subclause 8.1.2.7).

5.3 Packet idle mode

In packet idle mode no temporary block flow exists.

In packet idle mode, the mobile station monitors the relevant paging subchannels on PCCCH, if such is present in the cell. If a PCCCH is not present in the cell, the mobile station monitors the relevant paging subchannels on CCCH.

In packet idle mode, upper layer may require the transfer of a LLC PDU, which implicitly triggers the establishment of a TBF and the transition to packet transfer mode.

5.4 Packet transfer mode

In packet transfer mode, the mobile station is allocated radio resource providing a TBF for a physical point-to-point connection on one or more packet data physical channels for the unidirectional transfer of LLC PDUs between the network and the mobile station. Continuous transfer of one or more LLC PDUs is possible. Concurrent TBFs may be established in opposite directions. The RR sublayer provides the following services:

- transfer of LLC PDUs in RLC acknowledged mode;

- transfer of LLC PDUs in RLC unacknowledged mode.

When a transfer of LLC PDUs terminates, in either downlink or uplink direction, the corresponding TBF is released. When all TBFs have been released, in downlink and uplink direction, the mobile station returns to packet idle mode.

Depending on the GPRS mode of operation (class A, B or C), the mobile station may leave both packet idle mode and packet transfer mode before entering dedicated mode, group receive mode or group transmit mode defined in GSM 04.08.

5.5 General procedures in packet idle and packet transfer modes

5.5.1 Mobile station side

The mobile station in packet idle and packet transfer modes shall monitor the system information broadcast in the cell.

In packet idle mode, the mobile station shall monitor the radio blocks on PCCCH or CCCH, as defined in subclauses 5.5.1.5 and 5.5.1.6. The determination of the paging group for the mobile station is defined in GSM 05.02.

5.5.1.1 Cell reselection

Cell reselection in packet idle and packet transfer modes is specified in GSM 05.08. The RR entity on the mobile station side indicates to the upper layers the availability of a cell and a cell change when decided by the RR sublayer. Upper layers are advised of system information broadcast in the cell when a new cell has been selected, or when a relevant part of this information changes.

When the mobile station reselects cell, the support of GPRS in the target cell is indicated in system information sent on BCCH, see GSM 04.08. If the mobile station has received a PBCCH description for the target cell, it shall assume that GPRS is supported, without further receiving system information on BCCH.

NOTE: A PBCCH description for the target cell may be received in the packet system information (neighbour cell information in PSI3 and 3bis) in the old serving cell, or in a BCCH message (SI13) in the target cell.

If a cell supports GPRS, the mobile station may perform packet access. If a cell does not support GPRS, the mobile station is not allowed to perform packet access.

When a cell reselection is determined by the mobile station, the mobile station may continue its operation in packet idle mode and packet transfer modes in the old serving cell, while acquiring certain system information for the target cell.

The operation in the old cell shall be aborted when one of the following conditions are met:

- the mobile station starts to receive information on PBCCH in the target cell;
- the mobile station has received the SI13 message (see GSM 04.08) and there is no PBCCH present in the target cell; or
- the criteria for camping on the old cell are no longer fulfilled (see GSM 05.08).

If PBCCH is present in the target cell, the mobile station shall delay the start of receiving information on PBCCH until the first occurrence of PSI1 in block B0. If the reception of PSI1 or PSI2 messages fails (see 5.5.1.2) the mobile station may re-establish and continue its operation in the old cell, until the next occurrence of PSI1 in block B0.

While the operation is maintained in the old cell, the mobile station may suspend its TBF(s) or suspend the monitoring of radio blocks on PCCCH and CCCH, in order to receive necessary information on BCCH in the target cell. Such suspension may be required in both packet idle and packet transfer modes. It is performed without notification to the network.

Suspension of the operation in the old cell for this purpose is allowed during the time required, for each message and according to the mobile station's multislot class, to receive the required messages on BCCH in the target cell. The allowable suspension of an uplink TBF may be extended with one block period, in case of dynamic or extended dynamic allocation, if the mobile station is unable to receive the corresponding USF due to the suspension of downlink operation.

When the conditions are fulfilled to switch to the new cell, the mobile station shall abort any TBF in progress by immediately ceasing to decode the downlink, ceasing to transmit on the uplink, stopping all RLC/MAC timers except for timers related to measurement reporting. The mobile station shall then switch to the identified specified new cell and shall obey the relevant RLC/MAC procedures on this new cell.

Under no circumstances, operations in the old cell shall be continued more than 5 seconds after a cell reselection has been determined.

5.5.1.2 System information on PBCCH

If PBCCH is present in the serving cell, the mobile station shall receive the PACKET SYSTEM INFORMATION (PSI) messages broadcast on PBCCH. The parameters determining the schedule of PSI messages on PBCCH are provided in the PSI1 message.

When a new cell has been selected where PBCCH is present, the mobile station shall perform a *complete acquisition* of PBCCH messages (see 5.5.1.4). The mobile station shall not perform packet access in the selected cell, or enter the packet transfer mode, until it has:

- acquired the PACKET SYSTEM INFORMATION TYPE 1 (PSI1) message;
- acquired a consistent set of PSI2 messages; and
- made at least one attempt to receive the complete set of PSI messages on PBCCH.

As an option, if the network supports the PACKET PSI STATUS message, the mobile station may perform packet access, and enter packet transfer mode, as soon as the PSI1 message and a consistent set of PSI2 messages have been received. In this case, the mobile station shall implement the request for acquisition of system information (see subclause 5.5.1.4.3).

When the PSI1 message has been received, the mobile station shall supervise the PBCCH_CHANGE_MARK and perform update of PBCCH information as specified in subclause 5.5.1.2.1. In addition, while camping on a cell, the mobile station shall take into account any PSI message that may be received on PCCCH and PACCH.

5.5.1.2.1 Supervision of PBCCH_CHANGE_MARK and update of PBCCH information

While camping on a cell where PBCCH is present, the mobile station shall attempt to receive the PSI1 message at least every 30 seconds. The mobile station shall then take into account any occurrence of the PSI1 message that may be received on PACCH during packet transfer mode or on PCCCH during periods in packet idle mode. If the PSI1 message is not received, the mobile station shall attempt to receive this message on PBCCH during periods in packet idle mode.

If the mobile station has not received the PSI1 message within the last 30 seconds, it shall attempt to receive the PSI1 message each time it is scheduled on PBCCH. Such attempts shall be made during both packet idle and packet transfer modes. A mobile station in packet transfer mode may suspend its TBF for this purpose (see 5.5.1.4.2).

The PSI1 message contains the PBCCH_CHANGE_MARK and PSI_CHANGE_FIELD parameters. The mobile station shall store the value of the last PBCCH_CHANGE_MARK received.

If the mobile station receives a PBCCH_CHANGE_MARK and detect that the value has been incremented by one unit, compared to the previous value, the mobile station shall perform a *partial acquisition* of PBCCH information. The information that shall be received is determined by the PSI_CHANGE_FIELD parameter.

- If the PSI_CHANGE_FIELD parameter indicates an update of a specific type or specific types of PSI messages, the mobile station shall receive at least one instance of each of the indicated type(s) of PSI messages.
- If the PSI_CHANGE_FIELD parameter indicates an update of an unspecified type or types of PSI messages, the mobile station shall receive at least one message instance within each consistent set of PSI messages on PBCCH. It shall also receive all PSI messages on PBCCH not belonging to a consistent set.
- If the PSI_CHANGE_FIELD parameter indicates an update of an unknown type of PSI message, the mobile station is not required to receive any PBCCH information.

When a PSI message is received, the mobile station shall consider the PSI *change mark* value, if such is received in the message and take appropriate action (see 5.5.1.4.1).

Whenever the mobile station receives a PBCCH_CHANGE_MARK and detects that the value has been incremented by more than one unit, compared to the previous value, the mobile station shall perform a *complete acquisition* of PBCCH messages (see 5.5.1.4).

5.5.1.2.2 Replacement of PBCCH

The mobile station may receive a PSI1 message indicating that PBCCH is being deactivated in the cell. Moreover, the mobile station may receive a PSI13 message on PACCH or PCCCH providing a different PBCCH description than the one currently being used, or a PSI13 message indicating that PBCCH is not present in the cell.

If the mobile station detects that PBCCH is being deactivated in the cell, or receives an indication that PBCCH is no longer present in the cell, it shall attempt to receive the SI13 message on BCCH. For this purpose, the mobile station may suspend its operation in packet idle and packet transfer modes (see 5.5.1.4.2). When the SI13 has been received, further action depends on the contents of the SI13 message:

If the SI13 message contains a PBCCH description, the mobile station shall perform a *complete acquisition* of PBCCH messages using the indicated PBCCH (see 5.5.1.4).

If the SI13 message does not contain a PBCCH description, the mobile station shall perform a *complete acquisition* of BCCH messages.

If the mobile station receives a PSI13 message with a PBCCH description different from that currently being used, the mobile station shall perform a *complete acquisition* of PBCCH messages using the new PBCCH.

5.5.1.2.3 PSI1 reception failure

If the mobile station has not received the PSI1 message within the last 60 seconds, a PSI1 reception failure has occurred. A PSI1 reception failure shall result in a cell reselection.

5.5.1.3 System information on BCCH

The presence of a PBCCH in the cell is indicated by a PBCCH description in the SI13 message on BCCH. If the mobile station receives a SI13 message without a PBCCH description, it shall assume that PBCCH is not present in the cell. If PBCCH is not present in the serving cell, the mobile station shall receive the SYSTEM INFORMATION (SI) messages broadcast on BCCH.

When a new cell has been selected where PBCCH is not present, the mobile station shall perform a *complete acquisition* of BCCH messages (see 5.5.1.4). The mobile station shall not perform packet access in the selected cell, or enter the packet transfer mode, until it has:

- acquired the SYSTEM INFORMATION TYPE 3 (SI3), SI13 and, if present, SI1 messages;
- made at least one attempt to receive other SI messages that may be scheduled within one TC cycle on BCCH (see GSM 05.02).

When the SI13 message has been received, the mobile station shall supervise the BCCH_CHANGE_MARK and perform update of BCCH information.

5.5.1.3.1 Supervision of BCCH_CHANGE_MARK and update of BCCH information

While camping on a cell where PBCCH is not present, the mobile station shall attempt to receive the SI13 or the PSI13 message at least every 30 seconds. The mobile station shall then take into account any occurrence of the PSI13 message that may be received on PACCH during packet transfer mode. If PSI13 is not received, the mobile station shall attempt to receive the SI13 message on BCCH during periods in packet idle mode.

If the mobile station has received neither the SI13 nor the PSI13 message within the last 30 seconds, it shall attempt to receive the SI13 message each time it is scheduled on BCCH. Such attempts shall be made during both packet idle and packet transfer modes. A mobile station in packet transfer mode may suspend its TBF for this purpose (see 5.5.1.4.2).

The SI13 and PSI13 messages contain the BCCH_CHANGE_MARK and SI_CHANGE_FIELD parameters. When camped on a cell where PBCCH is not present, the mobile station shall store the value of the last BCCH_CHANGE_MARK received. In that case,if the mobile station detects that the value has been incremented by one unit, compared to the previous value, the mobile station shall perform a *partial acquisition* of BCCH information. The information that shall be received is determined by the SI_CHANGE_FIELD parameter.

- If the SI_CHANGE_FIELD parameter indicates an update of a specific type or specific types of SI messages, the mobile station shall receive at least one instance of each of the indicated type(s) of SI messages.
- If the SI_CHANGE_FIELD parameter indicates an update of an unspecified type or types of SI messages, the mobile station shall receive at least one message instance within each consistent set of SI messages on BCCH. It shall also receive all SI messages on BCCH not belonging to a consistent set.
- If the SI_CHANGE_FIELD parameter indicates an update of an unknown type of SI message, the mobile station is not required to update any BCCH information.

When a SI message is received, the mobile station shall consider a SI *change mark* value, if such is received in the message and take appropriate action (see 5.5.1.4.1).

If the mobile station detects that the BCCH_CHANGE_MARK value has been incremented by more than one unit, compared to the previous value, the mobile station shall perform a *complete acquisition* of BCCH messages (see 5.5.1.4).

5.5.1.3.2 Establishment of PBCCH

The mobile station may receive a SI13 or PSI13 message providing a PBCCH description indicating that PBCCH is present in the cell. The mobile station shall then perform a *complete acquisition* of PBCCH messages using the indicated PBCCH (see 5.5.1.4).

5.5.1.3.3 SI13 reception failure

If the mobile station has not received the SI13 or the PSI13 message within the last 60 seconds, a SI13 reception failure has occurred. A SI13 reception failure shall result in a cell reselection.

5.5.1.4 Acquisition of system information on the broadcast channel

This procedure shall be used by the GPRS mobile station to perform a complete or partial acquisition of either PBCCH or BCCH information.

This procedure starts:

- when the mobile station is camped on BCCH and receives a BCCH_CHANGE_MARK or SI *change mark* value indicating that system information is changed;
- when the mobile station is camped on PBCCH and receives a PBCCH_CHANGE_MARK or PSI *change mark* value indicating that packet system information is changed.

This procedure starts when the mobile station receives a PBCCH_CHANGE_MARK, BCCH_CHANGE_MARK, PSI or SI *change mark* value indicating that system information is changed. Moreover, the procedure shall start at any other indication, which may be received by the mobile station, that the stored system information for the serving cell is no longer valid.

At cell selection or cell reselection, in case PBCCH is present in the target cell, this procedure starts when the mobile station starts to receive the information on PBCCH. In case PBCCH is not present in the target cell, the procedure starts when the mobile station has received the SI13 message.

In a *complete acquisition* of either PBCCH or BCCH information, the mobile station shall receive all PSI or SI messages that are scheduled on the respective broadcast channel. The mobile station shall delete any PSI or SI *change mark* value that was stored before the acquisition of PBCCH or BCCH information started.

In a *partial acquisition* of either PBCCH or BCCH information, only a certain subset of the PSI or SI messages that are scheduled on the respective broadcast channel shall be received. The mobile station may consider the state of the PSI or SI *change mark* values, without restriction, to reduce the total number of messages to receive.

When the mobile station acquires a set of PSI or SI messages on the respective broadcast channels, it may receive these messages during both packet idle and packet transfer modes. While the mobile station is in packet idle mode, an attempt to receive a required message shall be made each time the message is scheduled on the broadcast channel, until the message is received. While the mobile station is in packet transfer mode, it shall receive any PSI message that is sent by the network on PACCH.

If the mobile station has not received the required messages within 10 seconds after the start of this procedure, an attempt to receive a missing message shall be made each time the message is scheduled on the broadcast channel. These attempts shall then be performed during both packet idle and packet transfer modes. A mobile station in packet transfer mode may suspend its TBF(s) for this purpose, as specified in 5.5.1.4.2.

A second acquisition of either PBCCH or BCCH information may be initiated (e.g., when the mobile station receives a PSI or SI *change mark* value) before a previous acquisition is completed. In this case, the mobile station shall discard and immediately begin re-acquiring all the system information messages of the particular type to which the changemark value refers.

To allow future extension of PSI message types, the mobile station may disregard a message in a position within the schedule of PSI messages on PBCCH, where it receives a valid RLC/MAC control block, but diagnoses an unknown or unexpected (non-PSI) message type. When this condition is detected, the mobile station needs not to receive the PBCCH block in this position again, until a change in the schedule of PBCCH messages is detected or a *complete acquisition* of PBCCH information is required.

5.5.1.4.1 Consistent sets of system information messages

A mobile station, receiving a PSI or SI message belonging to a consistent set of system information messages, shall store the last PSI or SI *change mark* value received for the set of messages (see table 1).

Whenever mobile station receives a PSI or SI *change mark* value, which is not equal to the previously stored value for the set of messages, the mobile station shall perform a *partial acquisition* of either PBCCH or BCCH information. It shall then receive all instances of the PSI or SI messages belonging to the consistent set of system information messages.

If a mobile station detects an inconsistency amongst the PSI or SI *count* and *index* parameters within in a consistent set of system information messages or any other inconsistency making the information that is contained invalid, the mobile station shall discard the messages received so far and delete the stored PSI or SI *change mark* value. The mobile station may then restart the acquisition of the affected system information messages.

5.5.1.4.2 Suspension of operation to receive system information

During certain conditions, the mobile station in packet transfer mode is allowed to suspend a TBF to receive certain information on PBCCH or BCCH. Such suspension is made without notification to the network.

Suspension of a TBF for this purpose is allowed during the time required, for each message and according to the mobile station's multislot class, to receive the required messages on PBCCH or BCCH. The allowable suspension of an uplink TBF may be extended with one block period, in case of dynamic or extended dynamic allocation, if the mobile station is unable to receive the corresponding USF due to the suspension of downlink operation.

5.5.1.4.3 Request for acquisition of system information

As an option, the mobile station may implement the request for acquisition of system information. If the network supports the PACKET PSI STATUS message, the mobile station may then send the PACKET PSI STATUS message to the network, each time an acquisition of PBCCH information is initiated.

The PACKET PSI STATUS message shall indicate the present status of PSI messages stored in the mobile station. The PACKET PSI STATUS message is sent on PACCH when the mobile station is in packet transfer mode. The first sending of this message during the acquisition of PBCCH information shall take place at the first suitable opportunity after the acquisition is initiated.

During the acquisition of PBCCH information, the PACKET PSI STATUS message may be sent up to four times to the network. The second sending of this message shall take place at the first suitable opportunity at least 1 second after that the message is sent the first time. Further sendings shall take place at the first suitable opportunity at least 2 seconds after that the message was sent the previous time.

The PACKET PSI STATUS message shall not be sent when the mobile station has started to suspend its TBF(s) in order to receive the required PSI messages on PBCCH. The PACKET PSI STATUS message shall not be sent when the mobile station has acquired the complete set of PSI messages on PBCCH.

5.5.1.5 Discontinuous reception (DRX)

A mobile station in packet idle mode shall listen to the radio blocks on CCCH or PCCCH as defined in GSM 05.02. In the *GPRS attach procedure*, defined in GSM 04.08, the mobile station requests values for the SPLIT_PG_CYCLE and NON_DRX_TIMER parameters to be applied on CCCH or PCCCH.

NOTE: The support of the SPLIT_PG_CYCLE parameter is optional on CCCH, see GSM 05.02.

The SPLIT_PG_CYCLE and NON_DRX_TIMER parameters control:

- the occurrence of paging blocks on CCCH or PCCCH belonging to the mobile station (SPLIT_PG_CYCLE parameter, see GSM 05.02) in DRX mode (see GSM 03.64); and

- the duration of the non-DRX mode period to be applied by the mobile station when it has left the packet transfer mode and enters the packet idle mode.

There are three cases when the mobile station shall enter non-DRX mode.

- Upon transition from the packet transfer mode to the packet idle mode, a mobile station shall enter the Transfer non-DRX mode period. The duration of this period is determined by the minimum value of the NON_DRX_TIMER parameter, requested in the *GPRS attach procedure*, and the DRX_TIMER_MAX parameter, broadcast in the cell.

  When the mobile station receives a new value of the DRX_TIMER_MAX parameter, the mobile station is not required to consider the new value until the next time it enters packet idle mode.

- A mobile station operating in NC2 mode shall enter the NC2 non-DRX mode period when it sends an NC measurement report. The duration of this period is defined by the NC_NON_DRX_PERIOD parameter.

- When initiating the MM procedures for *GPRS attach* and *routeing area update* defined in GSM 04.08, the mobile station shall enter the MM non- DRX mode period. This period ends when either of the messages GPRS ATTACH ACCEPT, GPRS ATTACH REJECT, ROUTING AREA UPDATE ACCEPT or ROUTING AREA UPDATE REJECT is received by the mobile station. This period also ends after timeout waiting for any of these messages.

The non-DRX periods defined above run independent of each other and may overlap. The mobile station shall be in non-DRX mode during any of the non-DRX mode periods. Otherwise, the MS may be in DRX mode.

If the mobile station establishes a dedicated connection during any of the non-DRX mode periods, then that period shall continue to run.

5.5.1.6 Page mode procedures on PCCCH

The network sends page mode information in all downlink message on PCCCH (and PACCH, see NOTE 1). The page mode information controls possible additional requirements on a mobile station receiving the message.

NOTE: PCCCH, PDTCH and PACCH may be operated in frame stealing mode on the same PDCH. A mobile station in packet idle mode shall consider any RLC/MAC control message received in such a radio block as belonging to PCCCH. A mobile station in packet transfer mode shall consider any RLC/MAC control message received as belonging to PACCH.

A mobile station in packet transfer mode shall not consider the page mode information received in any message.

A mobile station in packet idle mode shall take into account the page mode information in any message received in a radio block on PCCCH corresponding to its paging group. The mobile station shall not take into account the page mode information in a message received in any other radio block than those corresponding to its paging group. The requirements yielded by the page mode information are as follows:

- *normal paging:* no additional requirements;

- *extended paging:* the mobile station is required in addition to receive and analyse the possible message in the third block period on PCCCH where paging may occur (PPCH), following the block corresponding to MS's paging group;

- *paging reorganization:* The mobile station shall receive all messages on the PCCCH regardless of the BS_PAG_BLKS_RES setting. It is required to receive all PBCCH messages. When the mobile station receives the next message to its (possibly new) paging group, subsequent action is defined by the page mode information in that message;

- *same as before:* no change of page mode from the previous page mode.

Note that a mobile station takes into account the page mode information only in packet idle mode and only in messages received in a radio block corresponding to its paging group, whatever the currently applied requirements are (normal paging, extended paging or paging reorganization).

When the mobile station selects a new PPCH, the initial page mode in the mobile station shall be set to paging reorganization. If an RLC/MAC block in a paging sub-channel does not contain page mode information, or if it is not received correctly, the default page mode information is *same as before*.

5.5.1.7 Frequency Parameters

Frequency parameters are included in the assignment messages (i.e., PACKET DOWNLINK ASSIGNMENT, PACKET UPLINK ASSIGNMENT, or PACKET TIMESLOT RECONFIGURE) and define the radio frequency channels or set of radio frequency channels the mobile station is to use during the assigned TBF. The first assignment message, sent to the mobile station when it enters packet transfer mode, shall include the frequency parameters. Subsequent assignment messages, sent to the mobile station during packet transfer mode, may omit the frequency parameters. If a mobile station receives a subsequent assignment message, during packet transfer mode, without the frequency parameters, the mobile station shall continue to use the previously assigned frequency parameters.

The Frequency Parameters information element is defined in subclause 12.8. The frequency parameters may use an ARFCN defining a non-hopping radio frequency channel, or use the indirect encoding, direct encoding 1 or direct encoding 2 defining a hopping radio frequency channel.

The indirect encoding defines the assigned set of radio frequency channels by referencing information stored within the mobile station. Such information may be received on PBCCH or BCCH (see subclauses 5.5.2.1, 11.2.19, 12.8 and 12.10a), or be received in a previous assignment message using one of the direct encoding options. An MA_NUMBER identifies which of up to eight stored sets of frequency parameters is to be used. The MA_NUMBER shall use the following coding:

MA_NUMBER = 0–13 shall be used to reference a GPRS mobile allocation received in a PSI2 message;

MA_NUMBER = 14 shall be used to reference a GPRS mobile allocation received in a SI13 or PSI13 message;

MA_NUMBER = 15 shall be used to reference a GPRS mobile allocation received in a previous assignment message using the direct encoding.

When the indirect encoding is used, the network may include a CHANGE_MARK_1 and a CHANGE_MARK_2 in the Frequency Parameters information element. The mobile station shall then verify that it is using a set of PBCCH or BCCH information identified by a PSI or SI *change mark* corresponding to one of the CHANGE_MARK_1 or 2 parameters, for the decoding of the frequency information. If that is not the case, an abnormal condition occurs.

The direct encoding defines the assigned set of radio frequency channels by using information contained within the assignment message. The direct encoding 1 references the cell allocation or reference frequency lists received on PBCCH for the decoding of this information. The direct encoding 2 is self contained. When the direct encoding 1 or 2 is used, the mobile station shall store the received GPRS mobile allocation for possible later reference in an assignment message using the indirect encoding. Such reference shall be made using the MA_NUMBER = 15.

For the decoding of frequency parameters, the mobile station shall be able to store the following frequency information (see subclauses 11.2.19, 12.8 and 12.10a):

- four Reference Frequency Lists received in the PSI2 information and the corresponding RFL_NUMBERs for identification, each RFL having a contents length of up to 18 octets;

- a Cell Allocation received in the PSI2 information referencing up to four RFLs;

- seven GPRS Mobile Allocations received in the PSI2 or the SI13/PSI13 information and the corresponding MA_NUMBERs for identification, each GPRS Mobile Allocation information element having a length of up to 12 octets (96 bits); and

- one GPRS mobile allocation received in an assignment message using direct encoding 1 or 2, consisting of either a GPRS Mobile Allocation information element having a length of up to 12 octets (96 bits) or a MA Frequency List having a contents length of up to 18 octets.

The mobile station shall be able to store the frequency information for the PCCCH description corresponding to its own PCCCH_GROUP (see 11.2.19).

The frequency information that the mobile station has stored while camping on a cell shall be deleted when the mobile station reselect cell.

5.5.1.8 TLLI management

In case the mobile station receives a message assigning a new P-TMSI from the network during the contention resolution procedure, the mobile station shall continue to use the old TLLI until the contention resolution is completed.

After contention resolution the mobile station shall apply new TLLI in RLC/MAC control block if the mobile has received a new P-TMSI.

5.5.2 Network side

5.5.2.1 System Information broadcasting

5.5.2.1.1 System information on PBCCH

If PBCCH is present in the cell, the network regularly broadcasts PACKET SYSTEM INFORMATION TYPE (PSI) 1, 2, 3 and 3bis messages, and optionally some types of PSI messages on the PBCCH. The PSI 2 and PSI 3bis messages and some further types of PSI messages may be broadcast in multiple number of instances. Based on the information broadcast in PSI messages, the mobile station is able to decide whether and how it may gain access to the system via the current cell.

Instances of the PSI 4 message are broadcast on PBCCH if the mobile stations camping on the cell shall perform interference measurements for power control, see GSM 05.08.

Instances of the PSI 5 message are broadcast on PBCCH if the mobile stations camping on the cell shall perform measurement reporting, see GSM 05.08.

The PSI1 message contains the PBCCH_CHANGE_MARK and PSI_CHANGE_FIELD parameters. The value of the PBCCH_CHANGE_MARK may be incremented by one, modulo 8, each time the network makes a change in the PBCCH information. Such change includes any addition, removal or replacement of PSI messages, contents of PSI messages, or change in the scheduling of PSI messages on PBCCH. A change in the contents of the PSI1 message alone shall not to be reflected in the PBCCH_CHANGE_MARK. When the PBCCH_CHANGE_MARK is incremented, the PSI_CHANGE_FIELD parameter shall be set to an appropriate value to indicate the nature of the latest change in the PBCCH information.

The network may increment the PBCCH_CHANGE_MARK value by more than one, modulo 8, in order to enforce a complete acquisition of PBCCH information of all mobile stations.

In order to avoid extensive TBF suspensions following an increment of the PBCCH_CHANGE_MARK parameter, the network may send PSI messages on PACCH to mobile stations in packet transfer mode.

The network indicates the support of the PACKET PSI STATUS message in the PSI1 message.

5.5.2.1.2 System information on BCCH

In addition to the requirements in GSM 04.08, a SYSTEM INFORMATION TYPE 13 (SI13) message is regularly broadcast by the network on the BCCH to support GPRS. Optionally and if PBCCH is not present in the cell, additional types of SI messages may be broadcast on BCCH. Some of them may be broadcast in multiple number of instances. If PBCCH is present in the cell, only the SI13 message is required on BCCH to support GPRS.

Based on this information, the GPRS mobile station is able to decide whether and how it gains access to the system via the current cell when PBCCH is not present.

The SI13 message contains the BCCH_CHANGE_MARK and SI_CHANGE_FIELD parameters. If PBCCH is not present in the cell, the value of the BCCH_CHANGE_MARK may be incremented by one, modulo 8, each time the network makes a change in the BCCH information. Such change includes any addition, removal or replacement of SI messages, contents of SI messages, or change in the scheduling of SI messages on BCCH. Changes in the contents of the SI13 message shall not to be reflected in the BCCH_CHANGE_MARK. Changes of the contents of the RACH Control Parameters information element alone (see GSM 04.08) may optionally be reflected in the BCCH-CHANGE-MARK; if reflected, the SI-CHANGE-FIELD parameter may indicate only one of the SI message containing the RACH Control Parameters. When the BCCH_CHANGE_MARK is incremented, the SI_CHANGE_FIELD parameter shall be set to an appropriate value to indicate the nature of the latest change in the BCCH information.

When PBCCH is not present in the cell, the network may increment the BCCH_CHANGE_MARK value by more than one, modulo 8, in order to enforce a complete acquisition of BCCH information of all mobile stations.

5.5.2.1.3 System information on PACCH (and other logical channels)

The network may broadcast PSI messages on PACCH. In particular, if a mobile station is busy in packet transfer mode and thus unable to receive the relevant blocks on the broadcast channels (PBCCH or BCCH) for a period longer than 15 seconds, the following requirements apply.

- If PBCCH is present in the cell, the network may broadcast the PSI1 message on PACCH such that the mobile station may receive the PSI1 message at least every 15 seconds.

- If PBCCH is not present in the cell, the network may broadcast the PSI13 message on PACCH such that the mobile station may receive the PSI13 messages at least every 15 seconds.

Furthermore, the network may broadcast PSI messages on PCCCH. In particular, the network may send the PSI1 and PSI13 messages on PCCCH to notify mobile stations in packet idle mode about changes in the PBCCH information or changes of the PBCCH channel description.

If the network supports the PACKET PSI STATUS message and this message is received from a mobile station, the network may schedule the missing PSI messages for that mobile station on PACCH.

5.5.2.1.4 Consistent sets of system information messages

Certain types of PSI and SI messages are sent on PBCCH and BCCH in a multiple number of instances. If such a PSI or SI message type is sent on (P)BCCH, the mobile station shall receive a consistent set of that type of PSI or SI message. In some cases, more than one type of PSI messages may be joined into one consistent set, see table 1.

Table 1: Consistent sets of system information messages

Consistent set / Message Type(s)	Broadcast Channel	Number of instances	PSI or SI change mark parameter	PSI or SI index parameter	PSI or SI count parameter
PSI2	PBCCH	1 – 8	PSI2_CHANGE_MARK	PSI2_INDEX	PSI2_COUNT
PSI3	PBCCH	1	PSI3_CHANGE_MARK		
PSI3 bis	PBCCH	1 – 16	PSI3_CHANGE_MARK	PSI3bis_INDEX	PSI3bis_COUNT
PSI4	PBCCH	0 – 8	PSI4_CHANGE_MARK	PSI4_INDEX	PSI4_COUNT
PSI5	PBCCH	0 – 8	PSI5_CHANGE_MARK	PSI5_INDEX	PSI5_COUNT
SI13 (notes 1 and 2)	BCCH	1	SI13_CHANGE_MARK		

NOTE 1: If the SI13 message provides a GPRS mobile allocation, it shall also provide an SI13_CHANGE_MARK. The SI13_CHANGE_MARK shall be used if the indirect encoding of the frequency information is applied in a packet assignment, referring to the GPRS mobile allocation provided in the SI13 message. There is only one instance of the SI13 message.

NOTE 2: The PSI13 message may be received on PACCH. It provides the same information as SI13, including the SI13_CHANGE_MARK.

NOTE 3: If PSI2 and SI13 *change mark* values need to be distinguished, e.g., during an activation or release of PBCCH, the network should assign appropriate values to these parameters.

A consistent set of system information messages is identified by a PSI or SI *change mark* parameter included in each message in the set. All messages within a consistent set shall have the same value of this parameter.

The total number of system information messages of a certain type within a consistent set is indicated by a PSI or SI *count* parameter included in each message in the set. The position of a certain message instance within the consistent set of system information messages is indicated by a PSI or SI *index* parameter.

The PSI or SI *count* parameter shall have the value N–1, where N is the number of instances of the particular message type present in the consistent set. The PSI or SI *index* parameter shall have a range from zero to N–1. Different instances of a particular message type in a consistent set shall have different values of the PSI or SI *index* parameter.

5.5.2.2 Paging

The network is required to send valid RLC data blocks or RLC/MAC control blocks continuously on all subchannels on PCCCH where paging can appear.

5.6 Measurement reports

The network may request measurement reports from the MS. The measurement reporting principles are specified in GSM 05.08. The measurement reports can be of two types:

- Network Control (NC) measurement reports when the MS is in MM Ready state (see GSM 04.08);
- Extended measurement (EM) reports in packet idle mode.

5.6.1 Network Control (NC) measurement reporting

The behaviour of the mobile station is controlled by the parameter NETWORK_CONTROL_ORDER broadcast in the PSI5 message on PBCCH, in the SI13 message on the BCCH and in the PSI13 message on PACCH. Alternatively, the network may send the NETWORK_CONTROL_ORDER parameters in a PACKET MEASUREMENT ORDER or in a PACKET CELL CHANGE ORDER message on PCCCH or PACCH to a particular mobile station . The parameter NETWORK_CONTROL_ORDER may have one of the values NC0, NC1, NC2 or RESET, see GSM 05.08.

When in mode NC1 or NC2, the mobile station shall perform the NC measurements as defined in GSM 05.08. The reporting periods are indicated in the NC_REPORTING_PARAMETER_I and NC_REPORTING_PARAMETER_T field of the PSI5, the PACKET CELL CHANGE ORDER or the PACKET MEASUREMENT ORDER message. If no PBCCH is allocated in the cell or if no individual order has been received by the mobile station, the default values of the parameters NC_NON_DRX_PERIOD, NC_REPORTING_PARAMETER_I and NC_REPORTING_PARAMETER_T shall be used. The mobile station shall apply to the timer T3158 either the NC_REPORTING_PARAMETER_I when in packet idle mode or the NC_REPORTING_PARAMETER_T when in packet transfer mode. The measurement results shall be sent to the network using the procedures specified in subclause 7.3 for packet idle mode, and in subclause 8.3 for packet transfer mode.

On expiry of timer T3158, the mobile station shall restart timer T3158 with the indicated reporting period, perform the measurements and send the PACKET MEASUREMENT REPORT message to the network.

A mobile station in mode NC1 or NC2 may receive a new indicated reporting period or change packet mode while timer T3158 is active. If the new indicated reporting period is less than the time to expiry of timer T3158, the mobile station shall immediately restart timer T3158 with the new indicated reporting period. Otherwise, the timer T3158 shall continue to run.

When the mobile station leaves the MM Ready state, the timer T3158 shall be stopped and no more measurement reports shall be sent to the network.

A mobile station may reselect a new cell or may be ordered to reselect a new cell with mode NC1 or NC2 while timer T3158 is active. If time to expiry of timer T3158 is greater than the indicated reporting period for the new cell, the mobile station shall immediately restart timer T3158 with the indicated reporting period for the new cell. Otherwise, the timer T3158 shall continue to run.

At cell reselection the NC measurement parameters valid for the mobile station in the new cell (NETWORK_CONTROL_ORDER, NC_NON_DRX_PERIOD, NC_REPORTING_PERIOD_I and NC_REPORTING_PERIOD_T) are either:

- brought from the old cell (if received in a PACKET MEASUREMENT ORDER or PACKET CELL CHANGE ORDER message); or
- received in a broadcast PSI5 message in the new cell. If no parameters have been brought from the old cell, and until individual measurement parameters are received in the new cell, the mobile station shall use the broadcast measurement parameters from PSI5 if a PBCCH is allocated in the cell or use the default parameter values.

The default frequency list to be applied in the new cell shall be the BA(GPRS) list of that cell until a new PACKET MEASUREMENT ORDER message is received. The BA(GPRS) list could also have been modified by frequency parameters received in a PACKET_CELL_CHANGE_ORDER message in the old cell.

A mobile station involved in an RR connection (in class A mode of operation) or performing *anonymous access*, see GSM 04.08, shall not send measurement reports to the network during that period. The mobile station shall return to the previous mode when the RR connection is released or when the TBF for the anonymous access is terminated.

5.6.2 Extended measurement (EM) reporting

The network may order a mobile station to send extended measurement reports. The behaviour of the mobile station is controlled by the parameter EXT_MEASUREMENT_ORDER in the PSI5 or PACKET MEASUREMENT ORDER message. The network may broadcast the PSI5 message on PBCCH to address all mobile stations or send the PACKET MEASUREMENT ORDER message on PCCCH or PACCH to address a particular mobile station as defined in subclauses 7.5 and 8.5. The parameter EXT_MEASUREMENT_ORDER shall have one of the values EM0, EM1 or RESET, see GSM 05.08.

When in mode EM1 the mobile station shall perform the measurements as defined in GSM 05.08. The EXT_REPORTING_PERIOD field of the PSI5 or PACKET MEASUREMENT ORDER message indicates reporting period. When instructed to perform EM measurement reporting the mobile station shall start timer T3178 according to the indicated reporting period. The results shall be sent to the network using the procedure defined in subclauses 7.3 or 8.3.

A mobile station may reselect to a new cell with mode EM1while timer T3178 is active. If the time to expiry of timer T3178 is greater than the indicated reporting period for the new cell, the mobile station shall immediately restart timer T3178 with the indicated reporting period for the new cell. Otherwise, the timer T3178 shall continue to run.

6 Paging procedures

For a mobile station in packet idle mode, the network may initiate the establishment of an RR connection or a downlink packet transfer by the paging procedures. The paging procedure can only be initiated by the network on a paging subchannel either on CCCH or on PCCCH. A number of mobile stations can be paged for either downlink packet transfer or RR connection establishment in the same paging message.

For a mobile station in packet transfer mode, the network may initiate the establishment of an RR connection by the paging procedures. The paging procedure can only be initiated by the network on PACCH or on a paging subchannel on CCCH. A number of mobile stations can be paged for RR connection establishment in the same paging message.

Paging procedures for RR connection establishment are described in subclause 6.1. Paging procedures for downlink packet transfer are described in subclause 6.2.

6.1 Paging procedure for RR connection establishment

The network may initiate the establishment of an RR connection by the paging procedure for RR connection establishment.

The network initiates the paging procedure to trigger an RR connection establishment by broadcasting a paging request message on the appropriate paging subchannel on CCCH or PCCCH. The paging subchannels on CCCH and PCCCH are specified in GSM 05.02 and GSM 03.13. The mobile station is paged on the PCCCH if available, otherwise on the CCCH.

The network may also send paging related information on PACCH to a mobile station in class A or class B mode of operation when such mobile station is in packet transfer mode.

If the mobile station in class B mode of operation is in packet transfer mode then the mobile is not required to decode the CS paging subchannels on CCCH.

6.1.1 Paging initiation using paging subchannel on CCCH

The paging initiation procedure and the paging request messages used on CCCH are specified in GSM 04.08.

6.1.2 Paging initiation using paging subchannel on PCCCH

Paging initiation using the paging subchannel on PCCCH applies when sending paging information to a mobile station in class A or class B mode of operation, when such mobile station is not in packet transfer mode and when the network operates according to mode I (see GSM 03.60).

The network initiates the paging procedure by broadcasting a PACKET PAGING REQUEST message on an appropriate paging subchannel on PCCCH, considering the DRX parameters valid for each targeted mobile station.

For each mobile station, that is paged to trigger RR connection establishment, a channel needed field is included in the PACKET PAGING REQUEST message, see subclause 11.2.22. The channel needed field defines how mobile stations of different capabilities shall code the establishment cause field in the CHANNEL REQUEST message, as specified in GSM 04.08.

A PACKET PAGING REQUEST message on PCCCH may include more than one mobile station identification.

6.1.3 Paging initiation using PACCH

Paging initiation using PACCH applies to a mobile station in class A or class B mode of operation when such mobile station is in packet transfer mode and when the network operates according to mode I (see GSM 03.60). In this case, the network shall send the PACKET PAGING REQUEST message to the mobile station on the appropriate PACCH. The message includes the mobile station identification and the channel needed field which defines how mobiles of different capabilities shall code the establishment cause field in the CHANNEL REQUEST message, as specified in GSM 04.08.

6.1.4 Paging response

Upon receipt of a Paging Request or Packet Paging Request message, the purpose of which is to trigger the establishment of an RR connection, a mobile station operating in class B mode of operation and in packet transfer mode shall either ignore or answer the paging message according to GSM 02.60.

When answering to a paging message the purpose of which is to trigger the establishment of an RR connection, the mobile station**,** whatever its MS class mode of operation, shall follow the paging response procedures as specified in GSM 04.08. Additionally, a mobile station operating in class B mode of operation shall abort the current GPRS data transfer(s) if it was in packet transfer mode, and suspend any GPRS activity until return to idle mode (see GSM 04.08).

6.2 Paging procedure for downlink packet transfer

The network may initiate the packet paging procedure in order to obtain the mobile station cell location required for downlink packet transfer. The packet paging procedure can only be initiated by the network. The procedure is initiated by broadcasting PACKET PAGING REQUEST message on the appropriate paging subchannel on CCCH or PCCCH. The paging subchannels on CCCH and PCCCH are specified in GSM 05.02 and GSM 03.13.

Packet paging using the paging subchannel on PCCCH applies when sending a paging request message to a mobile station that is not in packet transfer mode. Packet paging using the paging subchannel on CCCH applies to a mobile station that is not in packet transfer mode and when a PCCCH is not provided in the cell.

6.2.1 Paging procedure using paging subchannel on CCCH

The packet paging procedure and the paging request messages used on CCCH are specified in GSM 04.08.

6.2.2 Paging using paging subchannel on PCCCH

The packet paging procedure is initiated by the network. It is triggered by a page request from the MM sublayer, see GSM 04.07 and GSM 04.08

The network initiates the paging procedure by broadcasting a PACKET PAGING REQUEST message on an appropriate paging subchannel on PPCH, considering the DRX parameters valid for each targeted mobile station.

A PACKET PAGING REQUEST message may include more than one mobile station identification.

On receipt of a PACKET PAGING REQUEST message, the addressed mobile station shall forward an indication of the received paging information to the MM sublayer in the mobile station (see GSM 04.07 and GSM 04.08).

6.2.3 Paging response

Whenever the MM sublayer in the mobile station indicates an LLC PDU in response to a PACKET PAGING REQUEST, the mobile station shall initiate the uplink TBF using a PACKET CHANNEL REQUEST with cause value of 'Page Response'.

The procedure in response to a packet paging request on CCCH is specified in GSM 04.08.

NOTE: The mobile station initiates an implicit packet paging response by sending an LLC PDU to the network as defined in GSM 04.64 and GSM 04.08.

7 Medium Access Control (MAC) procedures on PCCCH

The establishment of a Temporary Block Flow (TBF) can be initiated by either the mobile station or the network.

The request for establishment of a TBF on PCCCH, if allocated in the cell, is described in this clause. If no PCCCH is allocated in the cell, the establishment of a TBF occurs on CCCH as described in GSM 04.08.

For mobile stations in packet idle mode on PCCCH, measurement reports messages are sent on temporary fixed allocations without the establishment of an uplink TBF (see subclause 7.3).

7.1 TBF establishment initiated by the mobile station on PCCCH

The purpose of the packet access procedure is to establish a TBF to support the transfer of LLC PDUs in the direction from the mobile station to the network. Packet access shall be done on PCCCH, as defined in this clause, if a PCCCH exists. Otherwise, packet access shall be done on CCCH, as defined in GSM 04.08. The packet access can be done in either one phase (subclause 7.1.2) or in two phases (subclauses 7.1.2 and 7.1.3).

TBF establishment can also be done on PACCH if a TBF for transfer of LLC PDUs in the direction from the network to the mobile station is already established (see subclause 8.1.1.1.3 and subclause 8.1.1.3.5).

The packet access procedure is initiated by the mobile station. Initiation is triggered by a request from upper layers to transfer a LLC PDU. The request from upper layers specifies throughput, RLC mode and a Radio Priority to be associated with the packet transfer or indicates that the packet to be transferred contains signalling.

Upon such a request:

- if access to the network is allowed (subclause 7.1.1), the mobile station shall initiate the packet access procedure as defined in subclause 7.1.3.1;

- otherwise, the RR sublayer in the mobile station shall reject the request.

If the request from upper layers indicates signalling, the highest Radio Priority shall be used at determination if access to the network is allowed, and the acknowledged RLC mode shall be used.

7.1.1 Permission to access the network

The network broadcasts on PBCCH and PCCCH, the list of authorised access classes and authorised special access classes in the ACC_CONTR_CLASS parameter.

Access to the network is allowed if the mobile station is a member of at least one authorised access class or special access class as defined in GSM 02.11.

7.1.2 Initiation of a TBF establishment

7.1.2.1 Initiation of the packet access procedure

The mobile station shall initiate the packet access procedure by scheduling the sending of PACKET CHANNEL REQUEST messages on the PRACH corresponding to its PCCCH_GROUP and simultaneously leaving the packet idle mode. The mobile station shall use the last access parameters received on PBCCH. At sending of the first PACKET CHANNEL REQUEST message, the mobile station shall store the value for the Retry (R) bit to be transmitted in all the subsequent MAC headers as 'MS sent channel request message once'. If a second PACKET CHANNEL REQUEST message is sent, the mobile station shall change the value for the Retry (R) bit to 'MS sent channel request message once or more'. The mobile station shall monitor the full PCCCH corresponding to its PCCCH_GROUP. When the mobile station receives the PERSISTENCE_LEVEL parameter, the value of the PERSISTENCE_LEVEL parameter shall be taken into account at the next following PACKET CHANNEL REQUEST attempt. A mobile station in class A or class B mode of operation shall respond to a PACKET PAGING REQUEST message indicating an RR connection establishment. A mobile station in class B mode of operation may abort the packet access procedure at the receipt of a PACKET PAGING REQUEST message indicating an establishment of an RR connection. PACKET PAGING REQUEST messages indicating a non-RR connection shall be ignored.

Mobile stations in class C mode of operation shall not respond to any type of PACKET PAGING REQUEST messages during the packet access procedure but decode the PERSISTENCE_LEVEL parameter if included in the message.

Moreover mobile stations of any class shall, when monitoring the full PCCCH, decode any occurrence of the PERSISTENCE_LEVEL parameter included in any message where this parameter may occur.

The PACKET CHANNEL REQUEST messages are sent on PRACH and contain an indication of the type of access and parameters required to indicate the mobile station's demand of radio resource.

There are two formats of the PACKET CHANNEL REQUEST message containing either 8 bit or 11 bit of information. The format to be applied on PRACH is controlled by the parameter ACC_BURST_TYPE which is broadcast on PBCCH.

If the mobile station intends to use the TBF to send user data, it shall request two phase access if the requested RLC mode is unacknowledged mode. If the requested RLC mode is acknowledged mode and the amount of data can fit in 8 or less than 8 RLC/MAC blocks, the mobile station shall indicate Short Access as access type. The number of blocks shall be calculated assuming channel coding scheme CS-1. If the requested RLC mode is acknowledged mode and the amount of data to send takes more than 8 RLC/MAC blocks, the mobile station shall request either one phase access or two phase access.

If the purpose of the packet access procedure is to send a Page Response, Cell update, or for a Mobility Management procedure, the mobile station shall indicate this in the PACKET CHANNEL REQUEST message.

If the purpose of the packet access procedure is to send a Measurement Report, the mobile station shall indicate 'Single block without TBF establishment' in the PACKET CHANNEL REQUEST message.

7.1.2.1.1 Access persistence control on PRACH

The mobile station shall make maximally M + 1 attempts to send a PACKET CHANNEL REQUEST message.

After sending each PACKET CHANNEL REQUEST message, the mobile station shall listen to the full PCCCH corresponding to its PCCH_GROUP.

The PRACH Control Parameters IE contains the access persistence control parameters and shall be broadcast on PBCCH and PCCCH. The parameters included in the PRACH Control Parameters IE are:

- MAX_RETRANS, for each radio priority i (i=1,2,3,4);
- PERSISTENCE_LEVEL, which consists of the PERSISTENCE_LEVEL P(i) for each radio priority i (i = 1, 2, 3, 4); where P(i) ∈ {0, 1, …14, 16}. If the PRACH Control Parameters IE does not contain the PERSISTENCE_LEVEL parameter, this shall be interpreted as if P(i)=0 for all radio priorities;
- S;
- TX_INT.

The mobile station shall start timer T3186 at the beginning of the Packet Access Procedure. At expiry of timer T3186, the packet access procedure shall be aborted, packet access failure shall be indicated to upper layers and the mobile station shall return to packet idle mode.

The first attempt to send a PACKET CHANNEL REQUEST message, may be initiated at the first possible TDMA frame containing PRACH on the PDCH defined by the PCCCH_GROUP for the mobile station (see GSM 05.02). For each attempt, the mobile station shall draw a random value R with uniform probability distribution in the set {0, 1, …, 15}. The mobile station is allowed to transmit a PACKET CHANNEL REQUEST message if P(i), where i is the radio priority of the TBF being established, is less or equal to R.

After each attempt, the S and T parameters are used to determine the next TDMA frame in which it may be allowed to make a successive attempt. The number of TDMA frames belonging to the PRACH on the PDCH defined by the PCCCH_GROUP for the mobile station between two successive attempts to send a PACKET CHANNEL REQUEST message excluding the TDMA frames potentially containing the messages themselves is a random value drawn for each transmission with uniform probability distribution in the set {S, S + 1, …, S + T - 1};

Here,

M is the value of the parameter MAX_RETRANS, belonging to the Radio Priority of the access;

T is the value of the parameter TX_INT;

S is the value of the parameter S.

Having made M + 1 attempts to send a PACKET CHANNEL REQUEST message, the mobile station shall stop timer T3186 and start timer T3170. At expiry of timer T3170, the packet access procedure shall be aborted, a packet access failure shall be indicated to the upper layer and the mobile station shall return to packet idle mode.

If the mobile station receives a PACKET DOWNLINK ASSIGNMENT message during the packet access procedure, it shall abort the packet access procedure and respond to the PACKET DOWNLINK ASSIGNMENT message (see subclause 7.2.1). The mobile station shall then attempt establishment of an uplink TBF using the procedures defined in subclause 8.1.2.5.

7.1.2.2 Packet assignment procedure

7.1.2.2.1 On receipt of a PACKET CHANNEL REQUEST message

On receipt of a PACKET CHANNEL REQUEST message, the network may assign a radio resource on one or more PDCHs to be used by the mobile station for the TBF.

The allocated PDTCH and PACCH resource is assigned to the mobile station in a PACKET UPLINK ASSIGNMENT message, sent on any PAGCH block on the same PCCCH on which the network has received the PACKET CHANNEL REQUEST message. The Packet Request Reference information element shall be used to address the mobile station and frequency parameters shall be included.

The mobile station may use information received on PBCCH, BCCH or a previous assignment message to decode the frequency parameters contained in the assignment message. If the mobile station detects an invalid Frequency Parameters information element in the assignment message, it shall abort the procedure, if required initiate a partial acquisition of PBCCH or BCCH information, and may then re-initiate this procedure.

If the dynamic allocation medium access mode is used, the network shall include the USF values allocated for PDCHs in the PACKET UPLINK ASSIGNMENT message.

If the fixed allocation medium access mode is used the PACKET UPLINK ASSIGNMENT message shall include an ALLOCATION_BITMAP. The network may include gaps in the ALLOCATION_BITMAP where the mobile station shall monitor the PACCH and perform neighbour cell power measurements.

A mobile station that has not indicated Single Block Without TBF Establishment in the PACKET CHANNEL REQUEST message shall perform a two phase access if the Single Block Allocation struct is included in the PACKET UPLINK ASSIGNMENT message, or a one phase access if the Dynamic Allocation struct or Fixed Allocation struct is included.

A mobile station that has indicated Single Block Without TBF Establishment in the PACKET CHANNEL REQUEST message for the purpose of sending a measurement report shall send a measurement report according to subclause 7.3.1.

A mobile station that has indicated Single Block Without TBF Establishment in the PACKET CHANNEL REQUEST message for the purpose of sending a PACKET CELL CHANGE FAILURE message shall send that message according to subclause 8.4.1

On receipt of a PACKET UPLINK ASSIGNMENT message corresponding to one of its 3 last PACKET CHANNEL REQUEST messages the mobile station shall stop timers T3186 and T3170 if running and stop sending PACKET CHANNEL REQUEST messages,.

If the PACKET UPLINK ASSIGNMENT message does not specify a TBF starting time, the mobile station shall switch to the assigned PDCHs, start timer T3164 and proceed with contention resolution of the one phase packet access procedure according to subclause 7.1.2.3.

A PACKET UPLINK ASSIGNMENT message may indicate an assignment starting time in the TBF Starting Time parameter. The mobile station shall monitor PCCCH until the point in time denoted by the TBF Starting Time. Thereafter it shall switch to the assigned PDCHs , start timer T3164 if a dynamic or extended dynamic allocation is assigned, and proceed with the contention resolution defined in subclause 7.1.2.3. If while monitoring the PCCCH the mobile station receives more than one PACKET UPLINK ASSIGNMENT message, it shall act upon the most recently received message and shall ignore the previous message.

On receipt of a PACKET CHANNEL REQUEST message with establishment cause indicating Two Phase Access Request or Single block without TBF establishment the network may allocate a single radio block on an uplink PDCH. In order to force the mobile station to make a two phase access, the network may allocate a single radio block on an uplink PDCH on receipt of a PACKET CHANNEL REQUEST message with any of the other access types.

If the mobile station has been allocated a single block in the PACKET UPLINK ASSIGNMENT message and the mobile station has not indicated Single block without TBF establishment in the PACKET CHANNEL REQUEST message, the mobile station shall proceed with the two phase packet access procedure according to subclause 7.1.3.

If the mobile station has been allocated a single block in the PACKET UPLINK ASSIGNMENT message and the mobile station has indicated Single block without TBF establishment in the PACKET CHANNEL REQUEST message, the mobile station shall proceed with the measurement report according to subclause 7.3.1.

7.1.2.2.2 Packet access queuing notification procedure

The network may send to the mobile station a PACKET QUEUING NOTIFICATION message. The PACKET QUEUING NOTIFICATION message shall be sent on the same PCCCH on which the network has received the PACKET CHANNEL REQUEST message. It contains a Temporary Queuing Identity which is later used to identify the mobile station (either when polling or sending an assignment).

On receipt of a PACKET QUEUING NOTIFICATION message corresponding to one of its 3 last PACKET CHANNEL REQUEST messages, the mobile station shall stop timer T3170 and T3186 if running, start timer T3162, and stop sending PACKET CHANNEL REQUEST messages. It shall continue to listen to the PCCCH. If the mobile station receives a PACKET QUEUING NOTIFICATION message while waiting for the TBF Starting Time of a valid PACKET UPLINK ASSIGNMENT message, the mobile station shall ignore the PACKET QUEUEING NOTIFICATION.

The network may send to the mobile station a PACKET UPLINK ASSIGNMENT message following a PACKET QUEUING NOTIFICATION message. In this case, the reference address to the mobile station shall be the Temporary Queuing Identity received in the PACKET QUEUING NOTIFICATION message.

On receipt of a PACKET UPLINK ASSIGNMENT message following a PACKET QUEUING NOTIFICATION message, the mobile station shall stop timer T3162 and follow the procedures defined in subclause 7.1.2.2.1.

At expiry of timer T3162, the packet access procedure shall be aborted, packet access failure shall be indicated to the upper layer and the mobile station shall return to packet idle mode.

If the mobile station receives a PACKET DOWNLINK ASSIGNMENT message, it shall abort the packet access queuing notification procedure and respond to the PACKET DOWNLINK ASSIGNMENT message (see subclause 7.2.1). The mobile station shall then attempt establishment of an uplink TBF using the procedures defined in subclause 8.1.2.5.

7.1.2.2.3 Packet polling procedure

The network may send to the mobile station a PACKET POLLING REQUEST message, after having sent a PACKET QUEUING NOTIFICATION message. The PACKET POLLING REQUEST message shall be sent on the same PDCH on which the network has received the PACKET CHANNEL REQUEST message. The mobile station shall be addressed by the Temporary Queuing Identity.

On receipt of a PACKET POLLING REQUEST message, the mobile station shall respond to the network with the PACKET CONTROL ACKNOWLEDGEMENT message in the reserved uplink radio block specified by the RRBP field. The reserved block is considered as a one block PACCH allocation.

7.1.2.2.4 Packet access reject procedure

The network may, as response to a PACKET CHANNEL REQUEST message, send to the mobile station a PACKET ACCESS REJECT message on any PAGCH block on the same PCCCH on which the channel request message was received. This message contains the request reference with time of reception of the PACKET CHANNEL REQUEST message, and optionally a WAIT_INDICATION field in the Reject structure of the PACKET ACCESS REJECT message.

On receipt of a PACKET ACCESS REJECT message containing a Reject structure addressed to the mobile station, where the Packet Request Reference in the Reject structure corresponds to one of its 3 last PACKET CHANNEL REQUEST messages:

- the mobile station shall stop timer T3186, stop sending PACKET CHANNEL REQUEST messages, start timer T3172 with the value indicated in the WAIT_INDICATION field if present, start timer T3170 if it has not already been started and listen to the downlink PCCCH until timer T3170 expires. During this time, the mobile station shall ignore additional PACKET ACCESS REJECT messages, but on reception of any PACKET UPLINK ASSIGNMENT message corresponding to any other of its 3 last PACKET CHANNEL REQUEST messages the mobile station shall stop timers T3170 and T3172 if running, and follow the procedure defined in subclause 7.1.2.2.1.

- If no PACKET UPLINK ASSIGNMENT message is received before expiration of timer T3170, the mobile station shall indicate a packet access failure to upper layer and return to packet idle mode (listening to its paging channel). As an option the mobile station may stop timer T3170, indicate a packet access failure to upper layer and return to packet idle mode as soon as it has received responses from the network on all, or in case more than 3 were sent, the last 3 of its PACKET CHANNEL REQUEST messages.

- If an erroneous PACKET UPLINK ASSIGNMENT message (e.g. the mobile station has been assigned more PDCHs than it supports according to its multislot class) addressed to the mobile station is received before expiration of timerT3170, the mobile station shall stop T3170 and act as stated in subclause 7.1.4.

- If the mobile station receives a PACKET DOWNLINK ASSIGNMENT message, it shall stop timer T3170 if running and respond to the PACKET DOWNLINK ASSIGNMENT message (see subclause 7.2.1).
- The mobile station is not allowed to make a new attempt for packet access in the same cell until timer T3172 expires, but may attempt packet access in an other cell after successful cell reselection for radio conditions reasons (see GSM 05.08). A mobile station in class A or class B mode of operation may attempt to enter the dedicated mode in the same cell before timer T3172 has expired. During the time T3172 is running, the mobile station shall ignore all received PACKET PAGING REQUEST messages except paging request to trigger RR connection establishment.
- The value of the WAIT_INDICATION field (i.e. timer T3172) relates to the cell from which it was received.

7.1.2.3 Contention resolution at one phase access

In order to uniquely identify the mobile station when sending on uplink, the RLC Header is extended to include the TLLI of the mobile station until the contention resolution is completed on the mobile station side.. At sending of the first RLC data block, the mobile station shall stop timer T3164, set counter N3104 to 1, and start timer T3166.

The counter N3104 shall be stepped each time the mobile station sends an RLC data block.

The network shall respond by including the TLLI in the PACKET UPLINK ACK/NACK message after the first correctly received RLC data block that comprises the TLLI.

The contention resolution is completed on the network side when the network receives a TLLI value identifying the mobile station, as part of the contention resolution procedure on the TBF.

The contention resolution is completed on the mobile station side when the mobile station receives a PACKET UPLINK ACK/NACK message with the same TLLI as the mobile station has included in the RLC header of the first RLC data blocks. The mobile shall then stop timer T3166 and counter N3104.

The contention resolution has failed on the mobile station side when the counter N3104 has reached its maximum value, or on expiry of timer T3166, or if the mobile station receives a PACKET UPLINK ACK/NACK message with the right TFI but with another TLLI than the mobile station has included in the RLC header of the first RLC data blocks. The mobile station shall then reset the counter N3104, stop timer T3166 if not expired, immediately stop transmitting on this TBF and reinitiate the packet access procedure unless it has already been repeated 4 times. In that case, TBF failure has occurred.

7.1.2.4 One phase packet access completion

The one phase packet access procedure is completed upon a successful contention resolution. The mobile station has entered the packet transfer mode.

7.1.2.5 Timing Advance

Initial timing advance may be provided in the PACKET UPLINK ASSIGNMENT in the TIMING_ADVANCE_VALUE field.

Thereafter either the timing advance is updated with a PACKET POWER CONTROL/TIMING ADVANCE message or a continuous timing advance procedure is used. If a Timing Advance Index is included in the assignment message, the mobile station shall use the continuous update timing advance mechanism, using its allocation on PTCCH (see GSM 05.10). Otherwise, the continuous update timing advance mechanism shall not be used. For the case where a TIMING_ADVANCE_VALUE field is not provided in the assignment message, the mobile station is not allowed to send normal bursts on the uplink until it receives a valid timing advance either through the continuous timing advance procedure or in a PACKET POWER CONTROL/TIMING ADVANCE message.

7.1.3 TBF establishment using two phase access

The two phase access procedure defined in this subclause, is applicable also in the case when no PCCCH is provided in the cell. For that case, the first phase is defined in GSM 04.08.

7.1.3.1 Initiation of the Packet resource request procedure

In the first phase of a two phase access in a cell provided with a PCCCH, the same procedures as for one phase access are used until the network sends a PACKET UPLINK ASSIGNMENT message including a Single Block Allocation struct, denoting two phase access to the mobile station. In that message, the network reserves a limited resource on one PDCH to the mobile station where the mobile station transmits a PACKET RESOURCE REQUEST message.

If PCCCH is provided in the cell, a two phase access can be initiated:

- by the network by ordering the mobile station to send a PACKET RESOURCE REQUEST message. The order is sent implicitly to the mobile station in the PACKET UPLINK ASSIGNMENT message by including the Single Block Allocation struct.

- by a mobile station, by requiring a two phase access in the PACKET CHANNEL REQUEST message. In this case, if access is granted, the network shall order the mobile station to send a PACKET RESOURCE REQUEST message. The order is sent implicitly to the mobile station in the PACKET UPLINK ASSIGNMENT message by including the Single Block Allocation Struct.

If no PCCCH is provided in the cell, a two phase access can be initiated:

- by a network or by a mobile station, as defined in GSM 04.08.

When the mobile station has received a PACKET UPLINK ASSIGNMENT message it shall respond with a PACKET RESOURCE REQUEST message in the allocated single radio block. At sending of the PACKET RESOURCE REQUEST message, the mobile station shall start timer T3168. Further more, the mobile station shall not respond to PACKET DOWNLINK ASSIGNMENT messages while timer T3168 is running.

The mobile station may request an open-ended or a close-ended TBF. If a close-ended TBF is requested, the number of octets of user data that the MS has to transfer in the TBF shall be indicated in the PACKET RESOURCE REQUEST message.

7.1.3.2 Packet resource assignment for uplink procedure

7.1.3.2.1 On receipt of a PACKET RESOURCE REQUEST message

On receipt of a PACKET RESOURCE REQUEST message, the network shall respond by sending a PACKET UPLINK ASSIGNMENT (radio resources assignment on one or more PDCHs to be used by the mobile station for the TBF) or a PACKET ACCESS REJECT message to the mobile station on PACCH on the same PDCH on which the mobile station has sent the PACKET RESOURCE REQUEST message.

On receipt of a PACKET UPLINK ASSIGNMENT message the mobile station shall switch to the assigned PDCHs.

The mobile station may use information received on PBCCH, BCCH or a previous assignment message to decode the frequency parameters contained in the assignment message. If the mobile station detects an invalid Frequency Parameters information element in the assignment message, it shall abort the procedure, if required initiate a *partial acquisition* of PBCCH or BCCH information, and may then re-initiate the access on the PRACH.

On receipt of a PACKET ACCESS REJECT message that contains a Reject structure addressed to the mobile station, the mobile station shall stop timer T3168 and indicate a packet access failure to upper layer.

If the PACKET ACCESS REJECT message contains a WAIT_INDICATION field in a Reject structure addressed to the mobile station, the mobile station start timer T3172 with the indicated value (Wait Indication). The mobile station is not allowed to make a new attempt for packet access in the same cell until timer T3172 expires, but may attempt packet access in an other cell after successful cell reselection.

On expiry of timer T3168, contention resolution has failed on the mobile station side. The mobile station shall then reinitiate the packet access procedure unless it has already been repeated 4 times. In that case, TBF failure has occurred and an RLC/MAC error should be reported to the higher layer.

7.1.3.3 Contention resolution at two phase access

The contention resolution is completed on the network side when the network receives a TLLI value identifying the mobile station, as part of the contention resolution procedure on the TBF.

The contention resolution is completed on the mobile station side when the mobile station receives a PACKET UPLINK ASSIGNMENT message with the same TLLI as the mobile station has included in the PACKET RESOURCE REQUEST message. The mobile station shall then stop timer T3168. It does not include its TLLI in any RLC data block.

The contention resolution has failed on the mobile station side when the mobile station does not receive a PACKET UPLINK ASSIGNMENT message with its TLLI before expiry of timer 3168. The mobile station shall then reinitiate the packet access procedure unless it has already been repeated 4 times. In that case, TBF failure has occurred.

7.1.3.4 Two phase packet access completion

The two phase packet access procedure is completed upon a successful contention resolution. The mobile station has entered the packet transfer mode.

7.1.3.5 Timing Advance

If a Timing Advance Index is included in the PACKET UPLINK ASSIGNMENT message, the mobile station shall use the continuous update timing advance mechanism, using its allocation on PTCCH (see GSM 05.10). Otherwise, the continuous update timing advance mechanism shall not be used.

For the case where a TIMING_ADVANCE_VALUE field is not provided in the assignment message, the mobile station shall use its previous timing advance (either assigned in the previous IMMEDIATE ASSIGNMENT message received on AGCH or in the previous PACKET UPLINK ASSIGNMENT message received on PAGCH, or got through the continuous timing advance procedure).

Otherwise, the mobile station is not allowed to send normal bursts on the uplink until it receives a valid timing advance either through the continuous timing advance procedure or in a PACKET TIMING ADVANCE/POWER CONTROL message.

7.1.4 Abnormal cases

If a failure occurs on the mobile station side of the new TBF before mobile station has successfully entered the packet transfer mode, the newly reserved resources are released; the subsequent behaviour of the mobile station depends on the type of failure and previous actions.

- If the failure is due to a TLLI mismatch, or to the expiry of timers T3166 or T3168, or to the fact that the counter N3104 reaches its maximum value in the contention resolution procedure, and repetition as described in subclauses 7.1.2.3, 7.1.3.2.1 or 7.1.3.3 has been performed, the mobile station shall remain in packet idle mode, notify higher layer (TBF establishment failure), transactions in progress shall be aborted and cell reselection continued, unless the failure takes place during a RR-cell change order procedure, in which case the mobile behaviour shall be as described in the Abnormal cases of the RR-Network Commanded Cell Change Order Procedure in GSM 04.08.

- If the mobile station has been assigned more PDCHs than it supports according to its MS multislot class, the mobile station shall reinitiate the packet access procedure unless it has already been repeated 4 times. In that case, TBF failure has occurred.

- On expiry of timer T3164, the mobile station shall reinitiate the packet access procedure unless it has already been reinitiated 3 times, in which case the mobile station shall return to packet idle mode and notify higher layers (TBF establishment failure).

- If the failure is due to any other reason, the mobile station shall return to packet idle mode, notify higher layer (TBF establishment failure), transactions in progress shall be aborted and cell reselection continues.

7.2 TBF establishment initiated by the network on PCCCH

The purpose of network initiated TBF establishment is to establish a TBF to support the transfer of LLC PDUs in the direction from the network to the mobile station. The procedure may be entered when the mobile station is in packet idle mode. Network initiated TBF establishment can also be done on PACCH if a TBF for transfer of LLC PDUs in the direction from the mobile station to the network is already established (subclause 8.1.2.5).

7.2.1 Entering the packet transfer mode

The procedure is triggered by a request from upper layers on the network side to transfer a LLC PDU to a mobile station in packet idle mode. The request from upper layers specifies an optional priority level, a QoS profile including the requested RLC mode, optional DRX parameters, an optional IMSI and an optional MS Radio Access Capability to be associated with the packet transfer. The request is implicit when receiving a LLC PDU to a mobile station not already having any assigned radio resources. Upon such a request, the network shall initiate a packet downlink assignment procedure as defined in subclause 7.2.1.1.

7.2.1.1 Packet downlink assignment procedure

The network may assign a radio resource on one or more PDCHs to be used for the TBF. The amount of radio resource to be reserved is a network dependent choice.

The allocated radio resource is assigned to the mobile station in a PACKET DOWNLINK ASSIGNMENT message to the mobile station. The PACKET DOWNLINK ASSIGNMENT message is transmitted on the PCCCH timeslot corresponding to the PCCCH group the mobile station belongs to. The appropriate PCCCH group is calculated from the IMSI, see GSM 05.02. The behaviour of the network when the IMSI is not provided by the upper layers is implementation dependent for the calculation of the PCCCH group where the PACKET DOWNLINK ASSIGNMENT message has to be sent. If the mobile station is in non-DRX mode or if the IMSI or the DRX parameters are not provided by the upper layers, there is no further restriction on what part of the downlink PCCCH timeslot this PACKET DOWNLINK ASSIGNMENT message can be sent, provided that this part corresponds to one or more blocks where paging may appear. If the mobile station applies DRX, this message shall be sent in one or more PCCCH block(s) corresponding to a paging group determined for the mobile station in packet idle mode (see GSM 05.02). The multislot capabilities of the mobile station must be considered.

Initial timing advance can be provided in the PACKET DOWNLINK ASSIGNMENT as Timing Advance Value field. In case valid timing advance for the mobile station is not available, the network may use one of the following two methods to trigger the mobile station to transmit a PACKET CONTROL ACKNOWLEDGEMENT:

- if the PACKET DOWNLINK ASSIGNMENT message is not segmented and the CONTROL_ACK_TYPE parameter in the System Information indicates acknowledgement is access bursts, the network may set the poll bit in the PACKET DOWNLINK ASSIGNMENT message.

- if the PACKET DOWNLINK ASSIGNMENT message is segmented or the CONTROL_ACK_TYPE parameter in the System Information does not indicate acknowledgement is access bursts, the network may send PACKET POLLING REQUEST with TYPE_OF_ACK parameter set to access bursts (see 11.2.12).

The mobile station shall then send the PACKET CONTROL ACKNOWLEDGEMENT as four access bursts in the reserved uplink radio block specified by the RRBP field. The reserved block is considered as a one block PACCH allocation. The PACKET CONTROL ACKNOWLEDGEMENT, message is used to derive the timing advance.

Thereafter, either the timing advance in the mobile station is updated with a PACKET POWER CONTROL /TIMING ADVANCE message or a continuous timing advance procedure is used. If a Timing Advance Index is included in the assignment message, the mobile station shall use the continuous update timing advance mechanism, using its allocation on PTCCH (see GSM 05.10). Otherwise the continuous update timing advance mechanism shall not be used. For the case where Timing Advance Value is not provided in the assignment message, the mobile station is not allowed to send normal bursts (e.g. PACKET DOWNLINKACK/NACK message) on the uplink until it receives a valid timing advance either through the continuous timing advance procedure or in a PACKET POWER CONTROL /TIMING ADVANCE message.

For a mobile station operating in half duplex mode, the network may use the Measurement Starting time, Interval and Bitmap parameters to define when the mobile station shall monitor the PACCH and perform adjacent channel measurements.

The mobile station shall use information received on the PBCCH to decode the channel descriptions contained in the assignment. If frequency hopping is applied, the mobile station shall use the last CA received on PBCCH to decode the Mobile Allocation. Alternatively, the network may provide a Mobile Allocation in the assignment. The radio resource is assigned to the mobile station in a PACKET DOWNLINK ASSIGNMENT message. On receipt of a PACKET DOWNLINK ASSIGNMENT message, the mobile station shall switch to the assigned PDCHs.

A PACKET DOWNLINK ASSIGNMENT message may indicate an assignment starting time in the TBF Starting Time parameter. The mobile station shall monitor PCCCH until the point in time denoted by the TBF Starting Time. Thereafter it shall switch to the assigned PDCHs. If while monitoring the PCCCH the mobile station receives more than one PACKET DOWNLINK ASSIGNMENT message, it shall act upon the most recently received message and shall ignore the previous message.

When receiving the PACKET DOWNLINK ASSIGNMENT message and after waiting the TBF Starting Time when applicable, the mobile station starts timer T3190. The timer is restarted when receiving the first valid RLC/MAC block.

On expiry of timer T3190, the mobile station shall abort the procedure and return to packet idle mode.

7.2.1.2 Packet downlink assignment procedure completion

The Packet downlink assignment procedure is completed when the mobile station receives a valid RLC/MAC block. The mobile station has entered the packet transfer mode.

7.2.1.3 Packet polling procedure

The network may send to the mobile station a PACKET POLLING REQUEST message. If the MS has received a PACKET DOWNLINK ASSIGNMENT message with no starting time or with a starting time that has already elapsed, the PACKET POLLING REQUEST message shall be sent on PACCH. Otherwise the PACKET POLLING message shall be sent on PAGCH. The mobile station shall be addressed by its TLLI or TFI.

On receipt of a PACKET POLLING REQUEST message, the mobile station shall respond to the network with the PACKET CONTROL ACKNOWLEDGEMENT message in the reserved uplink radio block specified by the RRBP field. The reserved block is considered as a one block PACCH allocation.

7.2.2 Abnormal cases

If a failure occurs on the mobile station side of the new TBF before mobile station has successfully entered the packet transfer mode, the newly reserved resources are released; the subsequent behaviour of the mobile station depends on the type of failure and previous actions.

- If the mobile station has been assigned more PDCHs than it supports according to its MS multislot class, the mobile station shall return to packet idle mode.
- On expiry of timer T3190, the mobile station shall return to packet idle mode.
- If the failure is due to any other reason, the mobile station shall return to packet idle mode and cell reselection continues.

7.3 Procedure for measurement report sending in packet idle mode

The procedure for measurement report sending shall be initiated by the mobile station at expiry of either the NC measurement report interval timer T3158 or the EM measurement report interval timer T3178. At expiry of the timer T3158 or T3178 the mobile station shall restart the expired timer T3158 or T3178, perform the measurements and initiate the packet access.

The procedure for measurement report sending is initiated by the mobile station either on PCCCH (subclause 7.3.1) or, if a packet control channel not exists, on CCCH (subclause 7.3.2).

If the mobile station initiates an RR connection establishment, the timers T3158 and T3178 shall be stopped and no measurement reports shall be sent. When the RR connection is released and if the mobile station has not changed cell, the measurement reporting procedure shall be restarted.

If the mobile station performs anonymous access, the timers T3158 and T3178 shall continue to run, but no measurement reports shall be sent. When the anonymous access terminates, the measurement reporting shall be resumed.

If a cell change has occurred during the RR connection, the measurements shall be cancelled until new NC or EM-orders have been received (see subclause 5.6).

7.3.1 Measurement report sending procedure initiated on PCCCH

The packet access procedure is initiated by the RR entity in the mobile station as specified in subclauses 7.1.2.1 and 7.1.2.2 but with access type 'Single block without TBF establishment' indicated in the PACKET CHANNEL REQUEST message. In the following subclauses the procedure is only briefly summarised and special requirements are indicated.

7.3.1.1 On receipt of a PACKET CHANNEL REQUEST message

On receipt of a PACKET CHANNEL REQUEST message with access type indicating 'Single block without TBF establishment', the network may allocate one radio block on an uplink PDCH.

If uplink resources are not available, the network may reject the access request by sending a PACKET ACCESS REJECT message (see subclause 7.3.1.3). The network shall not respond to a packet access for measurement reporting by sending a PACKET QUEUING NOTIFICATION message.

The radio resource is assigned to the mobile station in a PACKET UPLINK ASSIGNMENT message sent on any PAGCH on the same PCCCH on which the network has received the PACKET CHANNEL REQUEST message. The PACKET UPLINK ASSIGNMENT message shall include the following optional parameters:

- Power Control Parameters with timeslot allocation;
- Frequency parameters;
- TBF_STARTING_TIME indicating the frame number of the allocated block.

The 'Referenced Address struct' shall contain the Packet Request Reference.

7.3.1.2 On receipt of a PACKET UPLINK ASSIGNMENT message

When receiving a PACKET UPLINK ASSIGNMENT message the mobile station shall send PACKET MEASUREMENT REPORT in the allocated radio block on the assigned PDCH and immediately switch back to the PCCCH in non-DRX mode (see subclause 5.5.1.5). No TBF is established and the network shall not acknowledge the reception of the PACKET MEASUREMENT REPORT.

The PACKET MEASUREMENT REPORT shall either contain the NC Measurement Report struct or the EXT Measurement Report struct.

If T3170 expires before a PACKET UPLINK ASSIGNMENT message is received, the packet access procedure is aborted, the transmission of the measurement report for that measurement period is cancelled, and the mobile station returns to packet idle mode.

7.3.1.3 On receipt of a PACKET ACCESS REJECT message

The network may send to the mobile station a PACKET ACCESS REJECT message.

The mobile station shall react to this as described in subclause 7.1.2.2.4 with the exception of the actions taken when either of the timers T3172 or T3162 expires. In this case, the measurement report initiating the packet access shall be discarded and the mobile station shall return to packet idle mode.

If any of the measurement report interval timers T3158 or T3178 expires before any of the timers T3172 or T3162 expires, no new measurement shall be initiated but the timer T3158 or T3178 shall be restarted.

7.3.1.4 Abnormal cases

If on the mobile station side timer T3170 expires indicating unsuccessful channel request procedure or if the PACKET UPLINK ASSIGNMENT message contains faulty parameters, the mobile station shall abort the procedure and return to packet idle mode. The measurement report initiating the packet access shall be discarded.

If the mobile station receives either a PACKET QUEUING NOTIFICATION message or a PACKET POLLING REQUEST message, the mobile station shall abort the procedure and return to packet idle mode. The measurement report initiating the packet access shall be discarded.

7.3.2 Measurement report sending procedure initiated on CCCH

For detailed description of the procedures following in this subclause, see GSM 04.08. The procedure is here only briefly summarised and special requirements are indicated.

The packet access procedure is initiated by the RR entity in the mobile station. The mobile station sends a CHANNEL REQUEST message indicating 'Single block packet access' on RACH. The network shall then respond with either an IMMEDIATE ASSIGNMENT message granting a 'single block access' on a PDCH or an IMMEDIATE ASSIGNMENT REJECT message (see GSM 04.08).

If a PDCH block is assigned, the mobile station shall send the PACKET MEASUREMENT REPORT message in the allocated radio block on the assigned PDCH and then immediately switch back to the CCCH in non-DRX mode (see subclause 5.5.1.5). No TBF is established and the network shall not acknowledge the reception of the PACKET MEASUREMENT REPORT message.

The PACKET MEASUREMENT REPORT message shall either contain the NC Measurement Report struct or the EXT Measurement Report struct.

On receipt of an IMMEDIATE ASSIGNMENT REJECT message the mobile station shall follow the procedure specified in GSM 04.08 subclause 'Packet access rejection' with the exception of the actions taken when either of the GSM 04.08 timers T3142 or T3146 expires. In this case, the measurement report initiating the packet access shall be discarded and the mobile station shall return to packet idle mode.

If any of the measurement report interval timers T3158 or T3178 expires before any of the GSM 04.08 timers T3142 or T3146 expires, no new measurement shall be initiated but the timer T3158 or T3178 shall be restarted.

7.4 Cell Change Order procedures in Packet Idle mode

For an individual mobile station in packet idle mode, the network may initiate the cell change order procedure either on PCCCH or, if a packet control channel not exist, on CCCH.

7.4.1 Cell Change Order procedure initiated on PCCCH

The network may initiate the cell change order procedure by sending a PACKET CELL CHANGE ORDER message in a PCCCH block monitored by the mobile station. No TBF shall be established.

The PACKET CELL CHANGE ORDER message contains:

- The characteristics of the new cell that are necessary to identify it (i.e. BSIC + BCCH frequency);
- The NC measurement parameters valid for the mobile station in the new cell (NETWORK_CONTROL_ORDER and optionally: NC_NON_DRX_PERIOD, NC_REPORTING_PERIOD_I and NC_REPORTING_PERIOD_T).

If the mobile station is not involved in an RR connection, upon receipt of the PACKET CELL CHANGE ORDER message, the mobile station shall stop all relevant RLC/MAC timers except for timers related to measurement reporting and start timer T3174. The mobile station shall then switch to the specified new cell and obey the relevant RLC/MAC procedures on this new cell. If the timers related to measurement reporting expire while the reselection procedure has not yet been completed, these timers shall be restarted so that the mobile station resumes the measurement reporting procedures once camped on the new cell.

If the mobile station is involved in an RR connection, the mobile station shall ignore the PACKET CELL CHANGE ORDER message.

The procedure for completion of the cell change order is defined in subclause 8.4.1 and abnormal procedures are defined in subclause 8.4.2.

7.4.2 Cell Change Order procedure initiated on CCCH

The network may initiate the cell change order procedure by sending an IMMEDIATE ASSIGNMENT message for single block assignment in a CCCH block monitored by the mobile station. No TBF shall be established. The single block assignment procedure is specified in GSM 04.08.

The network shall then send the PACKET CELL CHANGE ORDER message in the assigned downlink block to the mobile station. The PACKET CELL CHANGE ORDER message contains:

- the characteristics of the new cell that are necessary to identify it (i.e. BSIC + BCCH frequency);
- the NC measurement parameters valid for the mobile station in the new cell (NETWORK_CONTROL_ORDER and optionally: NC_NON_DRX_PERIOD, NC_REPORTING_PERIOD_I and NC_REPORTING_PERIOD_T).

Upon receipt of the PACKET CELL CHANGE ORDER message, the mobile station shall stop all relevant RLC/MAC timers except for timers related to measurement reporting and start timer T3174. The mobile station shall then switch to the specified new cell and obey the relevant RLC/MAC procedures on this new cell. If the timers related to measurement reporting expire while the reselection procedure has not yet been completed, these timers shall be restarted so that the mobile station resumes the measurement reporting procedures once camped on the new cell..

The procedure for completion of the cell change order is defined in subclause 8.4.1 and abnormal procedures are defined in subclause 8.4.2.

7.5 Measurement Order procedures in Packet Idle mode

To send either the NC Measurement order or the Extended Measurement order to an individual mobile station in packet idle mode, the network may establish a connection either on PCCCH or, if a packet control channel not exist, on CCCH.

7.5.1 Measurement Order procedures initiated on PCCCH

The network may initiate the measurement order procedure by sending a PACKET MEASUREMENT ORDER message in a PCCCH blocks monitored by the mobile station. The PACKET MEASUREMENT ORDER message overrides a broadcast PSI5 message. If the PACKET MEASUREMENT ORDER message contains multiple instances, the network shall send all instances to the mobile station.

The PACKET MEASUREMENT ORDER message may contain the following optional Measurement order parameters:

- TLLI (shall be included)
- NC Measurement Parameters (NETWORK_CONTROL_ORDER; NC_NON_DRX_PERIOD; NC_REPORTING_PERIOD_I; NC_REPORTING_PERIOD_T; NC_FREQUENCY_LIST);
- EXT Measurement Parameters (EXT_MEASUREMENT_ORDER; EXT_REPORTING_TYPE; EXT_REPORTING_PERIOD; INT_FREQUENCY; EXT_FREQUENCY_LIST).

Upon receipt of the PACKET MEASUREMENT ORDER message, the mobile station shall store the Measurement order parameters and immediately return to PCCCH without sending any acknowledgement to the network. The mobile station shall obey the NETWORK_CONTROL_ORDER and the EXT_MEASUREMENT_ORDER as specified in GSM 05.08 and in subclause 5.6.

7.5.2 Measurement Order procedures initiated on CCCH

The network may initiate the measurement order procedure by allocating a single block in an IMMEDIATE ASSIGNMENT message sent to the mobile station on a CCCH block in the same way as specified in subclause 7.4.2.

The network shall then send the PACKET MEASUREMENT ORDER message in the assigned downlink block to the mobile station. The PACKET MEASUREMENT ORDER message overrides a broadcast PSI5 message. If the PACKET MEASUREMENT ORDER message contains multiple instances, the network has to repeat the complete procedure with new assignment for each instance of the message.

The PACKET MEASUREMENT ORDER message may contain the following optional Measurement order parameters:

- TLLI (shall be included)
- NC Measurement Parameters (NETWORK_CONTROL_ORDER; NC_NON_DRX_PERIOD; NC_REPORTING_PERIOD_I; NC_REPORTING_PERIOD_T; NC_FREQUENCY_LIST);
- EXT Measurement Parameters (EXT_MEASUREMENT_ORDER; EXT_REPORTING_TYPE; EXT_REPORTING_PERIOD; INT_FREQUENCY; EXT_FREQUENCY_LIST).

Upon receipt of the PACKET MEASUREMENT ORDER message, the mobile station shall store the Measurement order parameters and immediately return to CCCH without sending any acknowledgement to the network. The mobile station shall obey the NETWORK_CONTROL_ORDER and the EXT_MEASUREMENT_ORDER as specified in GSM 05.08 and in subclause 5.6.

8 Medium Access Control (MAC) Procedures in Packet Transfer Mode

8.1 Transfer of RLC data blocks

The transfer of RLC data blocks is governed by different principles on both uplink and downlink for each of the defined medium access modes: dynamic allocation, extended dynamic allocation, and fixed allocation. The medium access mode the mobile station is to use is signalled in the MAC_MODE parameter of the PACKET DOWNLINK ASSIGNMENT message. The medium access mode the mobile station is to use in an uplink transfer depends on if the Dynamic Allocation struct or the Fixed Allocation struct is included in the PACKET UPLINK ASSIGNMENT and PACKET TIMESLOT RECONFIGURE messages.

8.1.1 Uplink RLC data block transfer

Prior to the initiation of RLC data block transfer on the uplink, the network assigns the following parameters to characterize the uplink TBF in the PACKET UPLINK ASSIGNMENT or PACKET TIMESLOT RECONFIGURE message:

- a unique Temporary Flow Identity (TFI). The mobile station shall set the TFI field of each uplink RLC data block to the TFI value assigned to the mobile station in the PACKET UPLINK ASSIGNMENT or PACKET TIMESLOT RECONFIGURE message;
- a set of PDCHs to be used for the uplink transfer;
- a TBF Starting Time indication (optional in case of a dynamic or extended dynamic allocation).

All the RLC data blocks of an uplink TBF initiated by one phase access shall each contain a TLLI field in the RLC data block header until the contention resolution is completed on the mobile station side (see subclause 7.1.2.3). After the reaction time specified in GSM 05.10 no other RLC data blocks shall contain a TLLI field. The TLLI_BLOCK_CHANNEL_CODING parameter in the PACKET UPLINK ASSIGNMENT message indicates whether a RLC data block containing a TLLI field in the RLC data block header shall be encoded using CS-1 or using the channel coding scheme commanded. (see GSM 05.03). The mobile station shall send all other RLC data blocks using the channel coding scheme commanded.

Upon receipt of a command from the network to change channel coding scheme, the mobile station shall react in accordance with the time specified in GSM 05.10.

Upon receipt of any message containing an uplink assignment (PACKET UPLINK ASSIGNMENT message, TIMESLOT RECONFIGURE message and PACKET UPLINK ACK/NACK message), the mobile station shall be ready to transmit in accordance with the requirements given in GSM 05.10.

The mobile station shall transmit RLC/MAC blocks with the following priority:

- RLC/MAC control blocks, except Packet Uplink Dummy Control Blocks;
- RLC data blocks;
- RLC/MAC control blocks containing Packet Uplink Dummy Control Blocks.

During the TBF, if the countdown procedure has not started, the mobile station shall ask for new or different radio resources, by sending a PACKET RESOURCE REQUEST message (subclauses 8.1.1.1.2 and 8.1.1.3.2), in the following cases:

- when the mobile station has more blocks to send than indicated in the PACKET CHANNEL REQUEST message with access type short access;
- when the mobile station has indicated Page Response, Cell update or Mobility Management procedure as access type in the PACKET CHANNEL REQUEST and it has data to send;
- when the mobile station has data to send with a lower priority than indicated in the PACKET CHANNEL REQUEST message.

8.1.1.1 Dynamic allocation uplink RLC data block transfer

This subclause specifies mobile station behaviour for dynamic allocation uplink RLC data block transfer while in packet transfer mode.

When the mobile station receives an uplink assignment that does not contain a TBF starting time, the mobile station shall begin monitoring the assigned PDCHs for the assigned USF value for each assigned PDCH within the reaction time defined in GSM 05.10. If a TBF starting time information element is present and no uplink TBF is in progress, but a downlink TBF is in progress, the mobile station shall wait until the starting time before beginning to monitor the USFs. While waiting for the starting time, the mobile station shall monitor the assigned PDCHs. If an uplink TBF is already in progress, the mobile station shall continue to use the assigned parameters of the uplink TBF until the TDMA frame number indicated by the TBF starting time occurs, at which time the mobile station shall immediately begin to use the newly assigned uplink TBF parameters. If while waiting for the framenumber indicated by the TBF starting time the mobile station receives another uplink assignment, the mobile station shall act upon the most recently received uplink assignment and shall ignore the previous uplink assignment.

If the PACKET UPLINK ASSIGNMENT or PACKET TIMESLOT RECONFIGURE message contains the RLC_DATA_BLOCKS_GRANTED field, the TBF is a close-ended TBF. Otherwise the TBF is open-ended.

During a close-ended TBF the mobile station shall transmit at the most the number of RLC data blocks indicated in the RLC_DATA_BLOCKS_GRANTED field. In the case the access type in Channel Request was 'Short Access' (see 7.1.2), only the number of RLC data blocks requested in the Channel Request are allowed to be transmitted within the TBF, unless additional resources have been requested and assigned before the countdown procedure has started. Transmission of RLC/MAC control blocks and retransmissions of RLC data blocks do not count toward the limit. When the mobile station nears the end of the closed-ended TBF, it shall begin the count down procedure so that it sends the last RLC data block when CV = 0 (see subclause 9.3.1). The mobile station and network shall then follow the appropriate procedure for release of TBF defined in subclause 9.3.2.3 or subclause 9.3.3.3. Upon receipt of a PACKET TBF RELEASE message during a closed-end TBF, the mobile station shall follow the procedure in subclause 8.1.1.4. If the number of RLC data blocks granted is not sufficient to empty the mobile station's send buffer, the mobile station shall attempt to establish a new uplink TBF for the transmission of the outstanding LLC frames following the end of the close-ended TBF.

Whenever the mobile station detects an assigned USF value on an assigned PDCH, the mobile station shall transmit either a single RLC/MAC block or a sequence of four RLC/MAC blocks on the same PDCH. The time relation between an uplink block, which the mobile station shall use for transmission, and the occurrence of the USF value is defined in GSM 05.02. The number of RLC/MAC blocks to transmit is controlled by the USF_GRANULARITY parameter characterising the uplink TBF.

When the mobile station transmits an RLC/MAC block to the network, it shall start timer T3180. When the mobile station detects an assigned USF value on an assigned PDCH, the mobile station shall restart timer T3180. If timer T3180 expires, the mobile station shall perform the abnormal release with random access procedure (see subclause 8.7.2).

Whenever the network receives a valid RLC/MAC block from the mobile station, it shall reset counter N3101. The network shall increment counter N3101 for each radio block, allocated to that mobile station, for which no data is received. If N3101 = N3101max, the network shall stop the scheduling of RLC/MAC blocks from the mobile station and start timer T3169. When T3169 expires, the network may reuse the USF and TFI.

8.1.1.1.1 PACCH operation

The mobile station shall attempt to decode every downlink RLC/MAC block on all assigned PDCHs. Whenever the mobile station receives an RLC/MAC block containing an RLC/MAC control block, the mobile station shall attempt to interpret the message contained therein. If the message addresses the mobile station, the mobile station shall act on the message.

Whenever the mobile station detects an assigned USF value on any assigned PDCH, the mobile station may transmit a PACCH block on the same PDCH in the next block period (see GSM 05.02). The mobile station shall not transmit an RLC data block in any uplink radio block allocated via the polling mechanism (see subclause 10.4.4).

8.1.1.1.2 Resource Reallocation for Uplink

The mobile station and the network are not allowed to change the RLC mode of an already established TBF during resource reallocation. Change of RLC mode shall be achieved through release of on-going TBF and establishment of a new TBF with the newly requested RLC mode.

During an uplink packet transfer, upper layers may request to transfer another LLC PDU with a different Radio Priority, a different peak throughput class or a different RLC mode than the one which is in transfer. An LLC PDU containing signalling shall be treated as having the highest Radio Priority, and the acknowledged RLC mode shall be used.

If the mobile station has not started the countdown procedure and the new LLC PDU has the same RLC mode as the current uplink TBF and either a higher radio priority or the same radio priority but a higher peak throughput class, the mobile station shall immediately request a resource reallocation for uplink according to the new Radio Priority and peak throughput class of the new LLC PDU by sending a PACKET RESOURCE REQUEST message on the PACCH and starting timer T3168. Then the mobile station shall complete the transmission of the current LLC PDU.

If the new LLC PDU has the same RLC mode as the current uplink TBF and either a lower Radio Priority or the same radio priority but a lower peak throughput class, the mobile station shall first complete the sending of the LLC PDU in transfer. When the sending of LLC PDUs at the higher Radio Priority or the same radio priority but higher peak throughput class stops, without waiting for the acknowledgement from the network if in RLC acknowledged mode, the mobile station shall then perform the request of a resource reallocation for uplink for any remaining LLC PDU(s) by sending a PACKET RESOURCE REQUEST message on the PACCH and start timer T3168.

If the new LLC PDU does not have the same RLC mode as the current uplink TBF but has a higher radio priority, the mobile station shall complete the transmission of the current LLC PDU using the countdown procedure including acknowledgement from the network, if in RLC acknowledged mode. The mobile station shall then release the TBF and establish a new uplink TBF for transmission of the new LLC PDU. When the sending of LLC PDUs with a higher radio priority is completed using the countdown procedure, including acknowledgement from the network if in RLC acknowledged mode, the mobile station shall try to establish an uplink TBF for the transmission of any remaining LLC PDU(s).

On receipt of the PACKET RESOURCE REQUEST the network shall respond by sending a PACKET UPLINK ASSIGNMENT or PACKET TIMESLOT RECONFIGURE or a PACKET ACCESS REJECT message to the mobile station on the downlink PACCH.

After the transmission of the PACKET RESOURCE REQUEST message with the reason for changing the priority or peak throughput class of an assigned uplink TBF the mobile station shall continue to use the currently assigned uplink TBF assuming that the requested priority or peak throughput class is already assigned to that TBF.

On receipt of a PACKET UPLINK ASSIGNMENT or PACKET TIMESLOT RECONFIGURE message the mobile station shall stop timer T3168 and switch to the assigned PDCHs.

The mobile station is then not allowed to send new PACKET RESOURCE REQUEST messages until either a new packet transfer request is received from the upper layers or when sending of LLC PDU(s) at a lower Radio Priority has to be continued.

On expiry of timer T3168 the mobile station shall retransmit the PACKET RESOURCE REQUEST message unless the PACKET RESOURCE REQUEST has already been transmitted four times in which case the mobile station shall return to packet idle mode and indicate a packet access failure to upper layer.

If no PACKET UPLINK ASSIGNMENT or PACKET TIMESLOT RECONFIGURE message is received before the mobile station has completed its currently assigned TBFs the mobile station shall stop timer T3168 and return to packet idle mode (listening to its paging channel).

The network may at any time during the uplink TBF initiate a change of resources by sending on the downlink PACCH monitored by the MS, an unsolicited PACKET UPLINK ASSIGNMENT or PACKET TIMESLOT RECONFIGURE message to the mobile station. During the reallocation TFI is allowed to be changed.

On receipt of a PACKET ACCESS REJECT message , the mobile station shall stop timer T3168 if running and indicate a packet access failure to upper layers. If no downlink TBF exists, the mobile station shall return to packet idle mode.

If the PACKET ACCESS REJECT message contains a WAIT_INDICATION field in a Reject structure addressed to the mobile station, the mobile station shall:

- start timer T3172 and if the mobile station has additional RLC data blocks to transmit, it shall initiate a new TBF establishment procedure on the RACH or PRACH, but the mobile station is not allowed to make a new attempt for packet access in the same cell until timer T3172 expires, it may, however, attempt packet access in an other cell after successful cell reselection. A mobile station in GPRS MS class A or B mode of operation may attempt to enter the dedicated mode in the same cell before timer T3172 has expired. During the time T3172 is running, the mobile station shall ignore all received PACKET PAGING REQUEST messages except paging request to trigger RR connection establishment.

The value of the WAIT_INDICATION field (i.e. timer T3172) relates to the cell from which it was received.

8.1.1.1.2.1 Abnormal cases

The following abnormal cases apply:

- if the mobile station receives a PACKET UPLINK ASSIGNMENT or PACKET TIMESLOT RECONFIGURE message and detects an invalid Frequency Parameters information element in the message the mobile station shall perform an abnormal release with system information (see subclause 8.7.3), performing a partial acquisition of system information messages containing frequency information;

- if the mobile station receives a PACKET UPLINK ASSIGNMENT or PACKET TIMESLOT RECONFIGURE message specifying frequencies that are not all in one frequency band then the mobile station shall perform an abnormal release with random access (see subclause 8.7.2);

- if the mobile station receives a PACKET UPLINK ASSIGNMENT or PACKET TIMESLOT RECONFIGURE message assigning fixed allocation MAC mode, the MS shall perform an abnormal release with random access;

- if the mobile station receives a PACKET UPLINK ASSIGNMENT message containing a Frequency Parameters information element specifying a frequency that is in a frequency band not supported by the mobile station then the mobile station shall perform an abnormal release with random access.

NOTE: A PACKET UPLINK ASSIGNMENT or PACKET TIMESLOT RECONFIGURE message received by a multi-band mobile station shall not be considered invalid if it indicates new frequencies that are all in a different frequency band to that of the PDCH(s) on which the assignment was received. The assignment may however be rendered invalid for some other reason.

8.1.1.1.3 Establishment of Downlink TBF

During uplink transfer, the network may initiate a downlink TBF by sending a PACKET DOWNLINK ASSIGNMENT message, or a PACKET TIMESLOT RECONFIGURE, to the mobile station on the PACCH. If a PACKET TIMESLOT RECONFIGURE message is sent, then the message shall contain the DOWNLINK_TFI_ASSIGNMENT field. The multislot restrictions of the mobile station shall be observed.

A mobile allocation or reference frequency list, received as part of a downlink assignment, replaces the previous parameters and shall be used until a new assignment is received or the MS enters to the packet idle mode.The downlink radio resource is assigned to the mobile station in a PACKET DOWNLINK ASSIGNMENT or PACKET TIMESLOT RECONFIGURE message. On receipt of an assignment message, and after the TBF starting time, if present, the mobile station shall switch to the assigned PDCHs, and start timer T3190. The operation of the downlink TBF follows the procedures in subclause 8.1.2 with the following additions:

- the mobile station shall prioritize transmission of RLC/MAC control blocks associated with the downlink TBF over RLC/MAC control blocks associated with the uplink TBF;
- if a timer or counter expiry causes the uplink TBF to be aborted in the mobile station, the mobile station shall also abort the downlink TBF and perform an abnormal release with random access (see subclause 8.7.2);
- if uplink and downlink TBFs are already established, then the network may send a PACKET TIMESLOT RECONFIGURE message without DOWNLINK_TFI_ASSIGNMENT. The mobile station shall interpret this as a reassignment of the timeslot allocations of the concurrent uplink and downlink TBFs and the downlink TFI is not changed.

8.1.1.1.3.1 Abnormal cases

If a failure occurs on the mobile station side before the new TBF has been successfully established, the newly reserved resources are released. The subsequent behaviour of the mobile station depends on the type of failure and previous actions:

- If the information in the PACKET TIMESLOT RECONFIGURE does not properly specify an uplink and downlink PDCH or violates the mobile station's multislot capabilities, the mobile station shall perform an abnormal release with random access (see subclause 8.7.2).
- If uplink and downlink TBFs are not already established and the PACKET TIMESLOT RECONFIGURE message does not include a DOWNLINK_TFI_ASSIGNMENT field, then the mobile station shall perform an abnormal release with random access (see subclause 8.7.2).
- If a failure in the PACKET TIMESLOT RECONFIGURE is due to any other reason, the mobile station shall abort the procedure and perform an abnormal release with random access (see subclause 8.7.2).
- If a failure in the PACKET DOWNLINK ASSIGNMENT is due to any reason, the mobile station shall abort the procedure and continue the normal operation of the uplink TBF.

8.1.1.2 Extended Dynamic Allocation uplink RLC data block transfer

The Extended Dynamic Allocation medium access method extends the Dynamic Allocation medium access method to allow higher uplink throughput.

This subclause defines the extensions to the Dynamic Allocation medium access method. All procedures defined in subclause 8.1.1.1 apply, except where this subclause defines a new procedure. In cases where this subclause conflicts with subclause 8.1.1.1, this subclause takes precedence.

8.1.1.2.1 Uplink PDCH Allocation

The PACKET UPLINK ASSIGNMENT message allocates to the mobile station a subset of 1 to N PDCHs, where N depends on the MSs multislot class.

The mobile station shall monitor its assigned PDCHs starting with the lowest numbered PDCH, then the next lowest numbered PDCH, etc. Whenever the mobile station detects an assigned USF value on an assigned PDCH, the mobile station shall transmit either a single RLC/MAC block or a sequence of four RLC/MAC blocks on the same PDCH and all higher numbered assigned PDCHs. The time relation between an uplink block, which the mobile station shall use for transmission, and the occurrence of the USF value is defined in GSM 05.02. The number of RLC/MAC blocks to transmit on each PDCH is controlled by the USF_GRANULARITY parameter characterising the uplink TBF. The mobile station need not monitor and shall disregard the USF on those higher numbered PDCHs during the block period where the assigned USF value is detected and the block period(s) in which the mobile station obtains permission to transmit.

If the network reduces the number of PDCHs allocated to a mobile station per block period, the network shall not allocate any resources to that mobile station for one block period following the block period with the higher number of PDCHs allocated.

8.1.1.2.2 PACCH operation

The mobile station shall attempt to decode every downlink RLC/MAC block on all monitored PDCHs. Whenever the mobile station receives an RLC/MAC block containing an RLC/MAC control block, the mobile station shall attempt to interpret the message contained therein. If the message addresses the mobile station, the mobile station shall act on the message.

The network shall transmit all PACCH messages on the PDCH carried on the lowest numbered timeslot in the allocation.

Whenever the mobile station detects an assigned USF value on any assigned PDCH, the mobile station may transmit a PACCH block on the same PDCH in the next block period (see GSM 05.02). The mobile station shall not transmit an RLC data block in any uplink radio block allocated via the polling mechanism (see subclause 10.4.4).

8.1.1.2.3 Neighbour cell power measurements

The mobile station shall perform neighbour cell measurements during any unused PDCH or group of unused PDCHs where the MS's Measurement Capabilities indicate that the mobile station is capable of making a neighbour cell measurement.

The network shall ensure that there are sufficient gaps as to allow the necessary number of measurements based upon the MS's Measurement Capabilities.

8.1.1.3 Fixed Allocation uplink RLC data block transfer

A fixed allocation TBF can be operated as a close-ended TBF or as an open-ended TBF. A close-ended TBF occurs when the MS sends a PACKET RESOURCE REQUEST or PACKET DOWNLINK ACK/NACK message containing an RLC_OCTET_COUNT field that contains a value different from '0'. An open-ended TBF occurs when the RLC_OCTET_COUNT field contains the value '0'.

A close-ended TBF transfers the number of octets specified in the RLC_OCTET_COUNT field. The MS is allowed to exceed the requested value only for the extra octets needed for LLC boundaries. The network will automatically provide sufficient resources for the number of octets requested. The mobile station does not need to send further PACKET RESOURCE REQUEST messages to the network. If the mobile station sends a subsequent PACKET RESOURCE REQUEST message to the network, the TBF becomes an open-ended TBF. A close-ended TBF may be ended by the network before the number of requested octets has been transferred. In this case the TBF ends when the network sends a FINAL_ALLOCATION indication in a fixed allocation assignment message or a PACKET ACCESS REJECT message to the mobile station.

An open-ended TBF transfers an arbitrary number of octets. The mobile station is required to send a PACKET RESOURCE REQUEST message for each fixed allocation. Each time the mobile station receives a fixed allocation, if it wishes to continue the TBF, it must then send another PACKET RESOURCE REQUEST to the network. The open-ended TBF ends when the network sends a FINAL_ALLOCATION indication in a fixed allocation assignment message or a PACKET ACCESS REJECT message to the mobile station, or when the mobile has exhausted its supply of data to be transmitted and has executed the countdown procedure.

At initiation of an uplink TBF using two phase access or during establishment of an uplink TBF during a downlink TBF, the mobile station shall signal the number of RLC data octets to be transferred, plus the number of RLC data block length octets to be transfered, in the RLC_OCTET_COUNT parameter of the PACKET RESOURCE REQUEST or PACKET DOWNLINK ACK/NACK.

In a one phase access, the TBF shall be operated as an open-ended TBF.

8.1.1.3.1 Transfer of RLC/MAC blocks

The PACKET UPLINK ASSIGNMENT or PACKET TIMESLOT RECONFIGURE message contains a Fixed Allocation struct when signalling a fixed allocation.

The TIMESLOT_ALLOCATION shall assign from 1 to 8 PDCHs to the fixed allocation. The multislot restrictions of the mobile station shall be observed.

If the BLOCKS_OR_BLOCK_PERIODS field indicates blocks, then the bits in the ALLOCATION_BITMAP correspond to radio blocks. Bits are included in the bitmap only for radio blocks on assigned PDCHs. Each bit in the bitmap indicates whether the corresponding radio block is assigned to the fixed allocation. The mobile station shall transmit an RLC/MAC block in each radio block assigned by the ALLOCATION_BITMAP. If the number of bits in the ALLOCATION_BITMAP is not an integral multiple of the number of timeslots assigned in the TIMESLOT_ALLOCATION field, then the mobile station shall add to the end of the bitmap (bit number indexes < 0, see section 12.4) the minimum number of bits needed to form an integral multiple of the number of assigned timeslots, with the value set to '0'.

If the BLOCKS_OR_BLOCK_PERIODS field indicates block periods, then the bits in the bitmap indicate which block periods are assigned to the allocation. The mobile station shall transmit an RLC/MAC block on each timeslot assigned in the TIMESLOT_ALLOCATION field in each block period assigned to the allocation.

The ALLOCATION_BITMAP_LENGTH field, if present, indicates the length of the ALLOCATION_BITMAP field. If not present, the ALLOCATION_BITMAP continues until the end of the message.

The network shall acknowledge packet transfers by sending PACKET UPLINK ACK/NACK messages on the PACCH during gaps in the uplink allocation. The network shall allocate additional resources for the retransmissions with a PACKET UPLINK ACK/NACK or an unsolicited PACKET UPLINK ASSIGNMENT or PACKET TIMESLOT RECONFIGURE message. The mobile station shall not request resources or adjust its RLC_OCTET_COUNT for retransmissions requested in the PACKET UPLINK ACK/NACK (see subclause 8.1.1.3.2). The mobile station may retransmit erroneous blocks in any allocated uplink block.

During a close-ended TBF the network automatically sends sufficient fixed allocation resources for the mobile station to transmit the number of octets specified in the RLC_OCTET_COUNT of the initial PACKET RESOURCE REQUEST or PACKET_DOWNLINK ACK/NACK message. The network signals the end of the close-ended TBF to the mobile by setting the FINAL_ALLOCATION bit to '1' in the PACKET UPLINK ASSIGNMENT, the PACKET TIMESLOT RECONFIGURE, or the PACKET UPLINK ACK/NACK, or by sending the PACKET ACCESS REJECT message or the PACKET TBF RELEASE message to the mobile station.

Upon receipt of a uplink assignment containing a fixed allocation and with the field FINAL_ALLOCATION set to 1, the mobile station shall execute the countdown procedure such that the countdown ends before the current allocation is exhausted.

Upon receipt of a PACKET ACCESS REJECT message, the mobile station shall release the TBF using the procedures in subclauses 9.3.2.3 or 9.3.3.3, such that the countdown ends within the current allocation. Then, if the mobile station has additional RLC data blocks to transfer, it shall initiate a new establishment procedure on the RACH or PRACH, or via the PACKET DOWNLINK ACK/NACK if during a downlink TBF.

Upon receipt of a PACKET TBF RELEASE message, the mobile station shall follow the procedure in subclause 8.1.1.4.

During a close-ended TBF the mobile station may change the Radio Priority of the TBF or extend the TBF by sending a PACKET RESOURCE REQUEST message or a PACKET DOWNLINK ACK/NACK containing a Channel Request Description IE. The close-ended TBF then becomes an open-ended TBF and the procedures in subclause 8.1.1.3.2 apply.

8.1.1.3.2 Reallocation for open-ended TBF

The mobile station and the network are not allowed to change the RLC mode of an already established TBF during resource reallocation. Change of RLC mode shall be achieved through release of on-going TBF and establishment of a new TBF with the newly requested RLC mode.

During an uplink packet transfer, upper layers may request to transfer another LLC PDU with a different Radio Priority, a different peak throughput class or a different RLC mode than the one which is in transfer. An LLC PDU containing signalling shall be treated as having the highest Radio Priority, and the acknowledged RLC mode shall be used.

If the mobile station has not started the countdown procedure and the new LLC PDU has the same RLC mode as the current uplink TBF and either a higher radio priority or the same radio priority but a higher peak throughput class, the mobile station shall immediately request a resource reallocation for uplink according to the new Radio Priority and peak throughput class of the new LLC PDU by sending a PACKET RESOURCE REQUEST message on the PACCH and starting timer T3168. Then the mobile station shall complete the transmission of the current LLC PDU. If the new LLC PDU has the same RLC mode as the current uplink TBF and either a lower Radio Priority or the same radio priority but a lower peak throughput class, the mobile station shall first complete the sending of the LLC PDU in transfer. When the sending of LLC PDUs at the higher Radio Priority or the same radio priority but higher peak throughput class stops, without waiting for the acknowledgement from the network if in RLC acknowledged mode, the mobile station shall then perform the request of a resource reallocation for uplink for any remaining LLC PDU(s) by sending a PACKET RESOURCE REQUEST message on the PACCH and start timer T3168.

If the new LLC PDU does not have the same RLC mode as the current uplink TBF but has a higher radio priority, the mobile station shall complete the transmission of the current LLC PDU using the countdown procedure including acknowledgement from the network, if in RLC acknowledged mode. The mobile station shall then release the TBF and establish a new uplink TBF for transmission of the new LLC PDU. When the sending of LLC PDUs with a higher radio priority is completed using the countdown procedure, including acknowledgement from the network if in RLC acknowledged mode, the mobile station shall try to establish an uplink TBF for the transmission of any remaining LLC PDU(s).

On receipt of the PACKET RESOURCE REQUEST the network shall respond by sending a PACKET UPLINK ASSIGNMENT or PACKET TIMESLOT RECONFIGURE or a PACKET ACCESS REJECT message to the mobile station on the downlink PACCH.

After the transmission of the PACKET RESOURCE REQUEST message with the reason for changing the priority or peak throughput class of an assigned uplink TBF the mobile station shall continue to use the currently assigned uplink TBF assuming that the requested priority or peak throughput class is already assigned to that TBF.

On receipt of a PACKET UPLINK ASSIGNMENT or PACKET TIMESLOT RECONFIGURE message the mobile station shall stop timer T3168 and switch to the assigned PDCHs.

The mobile station is then not allowed to send new PACKET RESOURCE REQUEST messages until either a new packet transfer request is received from the upper layers or when sending of LLC PDU(s) at a lower Radio Priority has to be continued.

On expiry of timer T3168, the mobile station shall retransmit the PACKET RESOURCE REQUEST message unless the PACKET RESOURCE REQUEST message has already been transmitted four times in which case the mobile station shall perform an abnormal release with random access.

If no PACKET UPLINK ASSIGNMENT or PACKET TIMESLOT RECONFIGURE message is received before the mobile station has completed its currently assigned TBFs the mobile station shall stop timer T3168 and return to packet idle mode (listening to its paging channel).

The network may at any time during the uplink TBF initiate a change of resources by sending on the downlink PACCH monitored by the MS, an unsolicited PACKET UPLINK ASSIGNMENT or PACKET TIMESLOT RECONFIGURE, or an uplink resource reassignment in a PACKET UPLINK ACK/NACK message to the mobile station.

On receipt of a PACKET ACCESS REJECT message , the mobile station shall stop timer T3168 if running and indicate a packet access failure to upper layer. If no downlink TBF exists the mobile station shall return to packet idle mode.

If the PACKET ACCESS REJECT message contains a WAIT_INDICATION field in a Reject structure addressed to the mobile station, the mobile station shall:

- start timer T3172 and if the mobile station has additional RLC data blocks to transmit, it shall initiate a new TBF establishment procedure on the RACH or PRACH, but the mobile station is not allowed to make a new attempt for packet access in the same cell until timer T3172 expires, it may, however, attempt packet access in an other cell after successful cell reselection. A mobile station in GPRS MS class A or B mode of operation may attempt to enter the dedicated mode in the same cell before timer T3172 has expired. During the time T3172 is running, the mobile station shall ignore all received PACKET PAGING REQUEST messages except paging request to trigger RR connection establishment.

- The value of the WAIT_INDICATION field (i.e. timer T3172) relates to the cell from which it was received.

8.1.1.3.2.1 At the beginning of each fixed allocation

At the beginning of each allocation of an open-ended TBF the mobile station shall either request to continue the TBF by transmitting a PACKET RESOURCE REQUEST or a PACKET DOWNLINK ACK/NACK containing a Channel Request Description IE message on the uplink PACCH, or the mobile station shall begin the countdown procedure so that it ends within the current allocation.

The mobile station shall signal the number of RLC data octets ready to transmit, plus the number of RLC data block length octets ready to transmit, in the RLC_OCTET_COUNT field of the PACKET RESOURCE REQUEST or PACKET DOWNLINK ACK/NACK message. The mobile station shall always indicate the current state of its transmit buffer at the time the message is sent. In RLC acknowledged mode, previously transmitted but currently unacknowledged octets shall not be included in the RLC_OCTET_COUNT.

8.1.1.3.2.2 Upon receipt of the reallocation request

Upon receipt of the PACKET RESOURCE REQUEST or PACKET DOWNLINK ACK/NACK with a Channel Request Description IE, the network shall continue the TBF by sending a PACKET UPLINK ASSIGNMENT or PACKET UPLINK ACK/NACK containing a fixed allocation to the mobile station, or shall end the TBF by sending a PACKET ACCESS REJECT message. Alternatively, the network may end the TBF by sending an uplink assignment containing a fixed allocation with the FINAL_ALLOCATION bit set to 1.

Upon receipt of a uplink assignment containing an ALLOCATION_BITMAP, the mobile station shall begin transmitting on the new resources at the indicated TBF Starting Time. If there is a conflict between a previous allocation and the new allocation, the new allocation shall take precedence.

Upon receipt of a PACKET UPLINK ACK/NACK with a REPEAT_ALLOCATION, the mobile station shall start a new allocation when the current allocation ends. This new allocation shall begin immediately after the current allocation ends and shall use the most recently received ALLOCATION_BITMAP. If the mobile station receives multiple PACKET UPLINK ACK/NACK messages with REPEAT_ALLOCATION during an allocation, the mobile shall repeat the ALLOCATION_BITMAP only once. If the mobile receives a PACKET UPLINK ACK/NACK without the REPEAT_ALLOCATION indication, the mobile station shall transmit to the end of its current allocation without repeating the allocation, regardless of any previous REPEAT_ALLOCATION indications that may have been received.

The network may also specify a TS_OVERRIDE indication in the PACKET UPLINK ACK/NACK. The TS_OVERRIDE applies to the next allocation after the current allocation expires. The TS_OVERRIDE field is a bitmap with a bit corresponding to each timeslot. For each bit set in the TS_OVERRIDE, the mobile shall disregard the ALLOCATION_BITMAP for that timeslot and shall transmit on all uplink radio blocks for that timeslot for the duration of the next allocation. If a bit is not set in the TS_OVERRIDE field, then the ALLOCATION_BITMAP shall apply to that timeslot.

8.1.1.3.2.3 Upon exhaustion of the current allocation

If the mobile station exhausts its assigned fixed allocation and has more RLC data blocks to transmit, it shall start timer T3188 and monitor the downlink of all assigned PDCHs. If the mobile station receives an assignment message containing a fixed allocation, the mobile station shall stop timer T3188 and use the new allocation at the assigned starting time.

If the mobile station receives a PACKET UPLINK ACK/NACK with a REPEAT ALLOCATION after its current allocation has been exhausted, it shall stop timer T3188, wait until the next repeated allocation boundary and then begin transmitting using the repeated ALLOCATION_BITMAP.

If timer T3188 expires, the mobile station shall perform an abnormal release with random access (see 8.7.2).

8.1.1.3.2.4 Ending the TBF

Upon receipt of a PACKET ACCESS REJECT message, the mobile station shall stop timer T3188, if running, release the TBF using the procedures in 9.3.2.3 or 9.3.3.3, such that the countdown ends within the current allocation. Then, if the mobile station has additional RLC data blocks to transfer, it shall initiate a new establishment procedure on the RACH or PRACH, or using a PACKET DOWNLINK ACK/NACK if during a downlink TBF.

Upon receipt of a uplink assignment containing a fixed allocation and with the field FINAL_ALLOCATION set to 1, the mobile station shall execute the countdown procedure such that the countdown ends before the current allocation is exhausted.

8.1.1.3.2.5 Abnormal Cases

The following abnormal cases apply:

- If the mobile station receives an assignment message containing an allocation other than a fixed allocation, the mobile station shall perform an abnormal release with random access.
- If a mobile station receives a PACKET UPLINK ASSIGNMENT or PACKET TIMESLOT RECONFIGURE message and detects an invalid Frequency Parameters information element in the message the mobile station shall perform an abnormal release with system information (see subclause 8.7.3), performing a partial acquisition of system information messages containing frequency information.
- if the mobile station receives a PACKET UPLINK ASSIGNMENT or PACKET TIMESLOT RECONFIGURE message with a MA_NUMBER information element specifying frequencies that are not all in one band then the mobile station shall perform an abnormal release with random access.

NOTE: A PACKET UPLINK ASSIGNMENT message received by a multi-band mobile station shall not be considered invalid if it indicates new frequencies that are all in a different frequency band to that of the PDCH(s) on which the assignment was received. The assignment may however be rendered invalid for some other reason.

8.1.1.3.3 Neighbour cell power measurements

The mobile station shall signal its measurement capabilities in the PACKET RESOURCE REQUEST message.

If the multislot capabilities and timeslot assignment would prevent the mobile station from making a neighbour cell power measurement during 24 of every 26 TDMA frames, the network shall leave sufficient gaps in the uplink allocation bitmap to allow the mobile station to make the required neighbor cell power measurements.

The mobile station shall make neighbour cell power measurements according to its Measurement Capabilities during a gap of one or more radio blocks if:

- the gap does not meet the criteria for the downlink PACCH (see subclause 8.1.1.3.4); and
- the uplink is not allocated during the radio block(s) comprising the gap; and
- the gap is at least T_{ta} (see GSM 05.02) timeslot(s) in length.

8.1.1.3.4 PACCH operation

A multislot class type 1 mobile station shall monitor a radio block on an assigned PDCH for downlink a PACCH block, according to its multislot capabilities:

- if the radio block is not assigned as part of a measurement gap; and
- the uplink is not allocated during the radio block; and
- the uplink of the T_{tb} (see GSM 05.02) timeslot(s) immediately after the radio block is not allocated; and
- if the mobile is multislot class 1 through 12, the uplink of the T_{ra} (see GSM 05.02) timeslot(s) immediately before the radio block is not allocated;
- if the mobile is multislot class 19 through 29, the uplink of the T_{rb} (see GSM 05.02) timeslot(s) immediately before the radio block is not allocated.

The network shall leave such sets of gaps in the uplink fixed allocation for the purpose of transmission of the downlink PACCH.

A mobile station shall monitor one PDCH in the allocation for downlink PACCH except during the measurement gap. The network shall indicate that PDCH on uplink resource assignment (DOWNLINK_CONTROL_TIMESLOT parameter) according to MS multislot class. DOWNLINK_CONTROL_TIMESLOT parameter shall always indicate a timeslot number which is used for TBF uplink.

A multislot class type 2 mobile station shall monitor all assigned PDCHs for PACCH, unless the mobile station also has current downlink TBF, in which case PDCH assigned for the downlink TBF shall take precedence.

After the fixed allocation is exhausted, the mobile station shall continue to monitor all assigned PDCH(s) that it is able to monitor according to its multislot class.

In the case of simultaneous uplink and downlink TBFs, the mobile station shall monitor all assigned downlink PDCHs and any uplink PDCHs it is able to monitor.

The mobile station may transmit a PACCH block on any uplink radio block allocated via the ALLOCATION_BITMAP.

In the case of simultaneous uplink and downlink TBFs, the mobile station shall not transmit an RLC data block in any uplink radio block allocated via the polling mechanism (see subclause 10.4.4).

8.1.1.3.5 Establishment of Downlink TBF

During an uplink fixed allocation TBF, the network may initiate a downlink TBF by sending the PACKET DOWNLINK ASSIGNMENT or PACKET TIMESLOT RECONFIGURE message on the PACCH.

The downlink radio resource is assigned to the mobile station in a PACKET DOWNLINK ASSIGNMENT or PACKET TIMESLOT RECONFIGURE message. The assigned timeslot configuration of the simultaneous uplink and downlink TBF must be compliant with the mobile station's multislot class, and must allow the performing of neighbour cell power measurements as described in 8.1.2.7.

On receipt of an assignment message the mobile station shall follow the procedure below.

If a mobile station is not assigned to operate in half duplex mode the network may send a PACKET TIMESLOT RECONFIGURE message. If a PACKET TIMESLOT RECONFIGURE message is sent, then the message shall contain the DOWNLINK_TFI_ASSIGNMENT field.

If the mobile station is not assigned to operate in half duplex mode, the mobile station shall, after expiry of the TBF starting time, if present, act upon the downlink assignment, and start timer T3190.

If the mobile station is assigned to operate in half duplex mode, the network shall wait for the mobile station to finish its current uplink resource allocation, and for the TBF starting time to elapse, if present, before sending RLC data blocks on the downlink.

If the mobile station is operating the uplink TBF in half duplex mode and receives a PACKET TIMESLOT RECONFIGURE message it shall exit half duplex mode and act on the PACKET TIMESLOT RECONFIGURE.

Whenever a mobile station operating on an uplink TBF in half duplex mode receives a assignment on the PACCH the mobile station shall complete the currently assigned fixed allocation. If the uplink TBF is not completed the mobile station shall, after expiry of the TBF starting time, if present, or if the TBF starting time has already expired, save the RLC state variables associated with the uplink TBF and suspend and save the state of the following timers:

T3182 Wait for Acknowledgement;

T3184 No Ack/Nack Received;

T3188 Allocation Exhausted.

Whenever a mobile station operating on an uplink TBF in half duplex mode receives a downlink assignment on the PACCH and has previously saved the state of the downlink TBF and has not since entered idle mode, the mobile station shall restore the saved downlink RLC state variables and timer values.

The mobile station shall then act upon the PACKET DOWNLINK ASSIGNMENT or PACKET TIMESLOT RECONFIGURE message.

8.1.1.3.5.1 Abnormal cases

If a failure occurs on the mobile station side before the new TBF has been successfully established, the newly reserved resources are released. The subsequent behaviour of the mobile station depends on the type of failure and previous actions:

- If the information available in the mobile station, after the reception of a PACKET DOWNLINK ASSIGNMENT message does not satisfactorily define a PDCH, the mobile station shall ignore the PACKET DOWNLINK ASSIGNMENT message.

- If a failure in the PACKET DOWNLINK ASSIGNMENT is due to any other reason, then the mobile station shall ignore the PACKET DOWNLINK ASSIGNMENT.

- If the information in the PACKET TIMESLOT RECONFIGURE does not properly specify an uplink and downlink PDCH or violates the mobile station's multislot capabilities, the mobile station shall perform an abnormal release with random access (see subclause 8.7.2).

- If the PACKET TIMESLOT RECONFIGURE does not include a DOWNLINK_TFI_ASSIGNMENT field, then the mobile station shall perform an abnormal release with random access (see subclause 8.7.2).

- If a failure in the PACKET TIMESLOT RECONFIGURE is due to any other reason, then the mobile station shall perform an abnormal release with random access (see subclause 8.7.2).

- If the mobile station is not operating the uplink TBF in half duplex mode and receives a PACKET DOWNLINK ASSIGNMENT message containing different frequency parameters than are currently in effect for the uplink TBF, the mobile station shall ignore the PACKET DOWNLINK ASSIGNMENT message and continue normal operation of the uplink TBF.

- If the mobile station is operating the uplink TBF in half duplex mode and receives a PACKET DOWNLINK ASSIGNMENT message that does not indicate half duplex mode, the mobile station shall ignore the PACKET DOWNLINK ASSIGNMENT.

- If the failure is due to any other reason, the mobile station shall abort the procedure and perform an abnormal release with random access (see subclause 8.7.2).

8.1.1.4 Network initiated release of uplink TBF

The network may initiate release of an uplink TBF by transmitting a PACKET TBF RELEASE message to the mobile station on the PACCH. A cause value indicates the reason for release.

If the cause value is "Normal release" the mobile station shall continue to the next LLC PDU boundary, starting the count down procedure (see subclause 9.3.1) at whatever value of CV is appropriate to count down to zero at the LLC PDU boundary, and then release the TBF according to the procedures in subclause 9.3.2.3 or 9.3.3.3. If the mobile station has more LLC PDU(s) to send, the mobile station may initiate the establishment of a new uplink TBF as defined in subclause 7.1.

If the cause value is "Abnormal Release" the mobile station shall immediately stop transmitting and follow the abnormal release with random access procedure (see subclause 8.7.2).

8.1.1.5 Abnormal cases

The following abnormal cases apply:

- if the mobile station receives a PACKET UPLINK ASSIGNMENT, PACKET TIMESLOT RECONFIGURE, PACKET UPLINK ACK/NACK with an ALLOCATION_BITMAP, or a PACKET DOWNLINK ASSIGNMENT message with an invalid Frequency Parameters information element, the mobile station shall perform an abnormal release with system information (see subclause 8.7.3), performing a partial acquisition of system information messages containing frequency information.

- if the mobile station receives a PACKET UPLINK ASSIGNMENT, PACKET TIMESLOT RECONFIGURE, PACKET UPLINK ACK/NACK with an ALLOCATION_BITMAP, or a PACKET DOWNLINK ASSIGNMENT message specifying frequencies that are not all in one band then the mobile shall perform an abnormal release with random access (see subclause 8.7.2).

- if the mobile station receives a PACKET UPLINK ASSIGNMENT, PACKET TIMESLOT RECONFIGURE, or a PACKET UPLINK ACK/NACK with an ALLOCATION_BITMAP whose TBF starting time has elapsed, the mobile station shall use whatever portion of the fixed allocation remains. If none of the fixed allocation remains, the mobile station shall ignore the message.

- if the mobile station receives a PACKET UPLINK ACK/NACK with missing mandatory fields, the MS shall perform an abnormal release with random access.

- if the mobile station has not started or has not completed the countdown procedure and it receives a Packet Uplink Ack/Nack with the Final Ack Indicator set, it shall perform an abnormal release with random access.

NOTE: A PACKET UPLINK ASSIGNMENT, PACKET TIMESLOT RECONFIGURE, PACKET UPLINK ACK/NACK with an ALLOCATION_BITMAP, or a PACKET DOWNLINK ASSIGNMENT message sent to a multi-band mobile station shall not be considered invalid if it indicates new frequencies that are all in a different frequency band to that of the ARFCN of the serving cell.

8.1.2 Downlink RLC data block transfer

Prior to the initiation of RLC data block transfer on the downlink, the network assigns the following parameters to the downlink TBF in the PACKET DOWNLINK ASSIGNMENT or PACKET TIMESLOT RECONFIGURE message:

- a unique Temporary Flow Identity (TFI). The TFI applies to all radio blocks transferred in regards to the downlink Temporary Block Flow (TBF);
- a set of PDCHs to be used for the downlink transfer;
- optionally, a TBF starting time indication.

For each TBF, the network shall prioritise RLC/MAC control blocks, not containing a PACKET DOWNLINK DUMMY CONTROL BLOCK message, to be transmitted ahead of RLC data blocks for that TBF. If the network has no other RLC/MAC block to transmit, but wishes to transmit on the downlink, the network shall transmit an RLC/MAC control block containing a PACKET DOWNLINK DUMMY CONTROL BLOCK message.

8.1.2.1 Downlink RLC data block transfer

This subclause specifies mobile station behaviour for downlink RLC data block transfer while in packet transfer mode.

Upon reception of a downlink assignment that does not contain a TBF starting time the mobile station shall start timer T3190 and then shall attempt to decode every downlink block on its assigned PDCHs. If the PACKET DOWNLINK ASSIGNMENT or PACKET TIMESLOT RECONFIGURE message contains a TBF starting time information element and there is no downlink TBF in progress, but an uplink TBF is in progress, the mobile station shall remain on the assigned PDCHs until the TDMA frame number indicated by the TBF starting time, at which time the mobile station shall start timer T3190 and immediately begin decoding the assigned downlink PDCH(s). If the PACKET DOWNLINK ASSIGNMENT or PACKET TIMESLOT RECONFIGURE message contains a TBF starting time and there is a downlink TBF already in progress, the mobile station shall continue to use the parameters of the downlink TBF in progress until the TDMA frame number indicated in the TBF starting time occurs, at which time the mobile station shall immediately begin to use the new assigned downlink TBF parameters. If while waiting for the framenumber indicated by the TBF starting time the mobile station receives another downlink assignment, the mobile station shall act upon the most recently received downlink assignment and shall ignore the previous downlink assignment. Procedures on receipt of a PACKET DOWNLINK ASSIGNMENT message while no TBF is in progress are specified in subclause 7.2.1.1.

If the mobile station receives a valid RLC data block addressed to itself, the mobile station shall restart timer T3190. If timer T3190 expires, the mobile station shall perform an abnormal release with return to CCCH or PCCCH (see subclause 8.7.1).

Upon receipt of a PACKET TBF RELEASE referring to the downlink TBF, the mobile station shall follow the procedure in subclause 8.1.2.9.

8.1.2.1.1 Abnormal cases

If a failure occurs on the mobile station side before the new TBF has been successfully established, the newly reserved resources are released. The subsequent behaviour of the mobile station depends on the type of failure and previous actions:

- If a mobile station receives a PACKET DOWNLINK ASSIGNMENT or PACKET TIMESLOT RECONFIGURE message and detects an invalid Frequency Parameters information element in the message, it shall perform an abnormal release with system information (see subclause 8.7.3), performing a partial acquisition of system information messages containing frequency information.
- If the information in the PACKET TIMESLOT RECONFIGURE does not properly specify an uplink and downlink PDCH or violates the mobile station's multislot capabilities, the mobile station shall perform an abnormal release with random access (see subclause 8.7.2).

- If the PACKET TIMESLOT RECONFIGURE does not include a DOWNLINK_TFI_ASSIGNMENT field, then the mobile station shall perform an abnormal release with random access (see subclause 8.7.2).
- If a failure in the PACKET TIMESLOT RECONFIGURE is due to any other reason, the mobile station shall abort the procedure and perform an abnormal release with random access (see subclause 8.7.2).
- If the information available in the mobile station, after the reception of a PACKET DOWNLINK ASSIGNMENT message does not satisfactorily define a PDCH, the mobile station shall ignore the PACKET DOWNLINK ASSIGNMENT message.
- If the mobile station is not operating an uplink TBF in half duplex mode and receives a PACKET DOWNLINK ASSIGNMENT message containing different frequency parameters than are currently in effect for the uplink TBF, the mobile station shall ignore the PACKET DOWNLINK ASSIGNMENT message and continue normal operation of the uplink TBF.
- If the mobile station is operating an uplink TBF in half duplex mode and receives a PACKET DOWNLINK ASSIGNMENT message that does not indicate half duplex mode, the mobile station shall ignore the PACKET DOWNLINK ASSIGNMENT.
- If a failure in the PACKET DOWNLINK ASSIGNMENT is due to any other reason, the mobile station shall abort the procedure. If an uplink TBF exists, the mobile station shall continue the normal operation of the uplink TBF. If an uplink TBF does not exist, the mobile station shall perform an abnormal release with return to CCCH or PCCCH (see subclause 8.7.1).

8.1.2.2 Polling for Packet Downlink Ack/Nack

Whenever the mobile station receives an RLC data block addressed to itself and with a valid RRBP field in the RLC data block header (i.e., is polled), the mobile station shall transmit a PACKET DOWNLINK ACK/NACK message in the uplink radio block specified by the RRBP field whatever the BSN value of the received RLC data block, unless another RLC/MAC control message is waiting to be transmitted, in which case the other RLC/MAC control message shall be sent. However, the mobile station shall transmit an RLC/MAC control message other than a PACKET DOWNLINK ACK/NACK message at most every second time it is polled. Furthermore the mobile station shall not transmit an RLC/MAC control message other than a PACKET DOWNLINK ACK/NACK message if the PACKET DOWNLINK ACK/NACK message would contain a Final Ack Indicator or Channel Request Description IE. The mobile station shall not send a PACKET CONTROL ACKNOWLEDGEMENT message unless otherwise specified.

Whenever the network receives a valid RLC/MAC control message from the mobile station, it shall reset counter N3105. The network shall increment counter N3105 for each radio block, allocated to that mobile station with the RRBP field, for which no RLC/MAC control message is received. If N3105 = N3105max, the network shall release the downlink TBF internally and start timer T3195. When T3195 expires, the network may reuse the TFI.

The PACKET DOWNLINK ACK/NACK message contains a Channel Quality Report (see GSM 05.08). The optional I_LEVEL measurements results shall be included in at least every other PACKET DOWNLINK ACK/NACK message.

The network should poll the mobile station by respecting the MS multislot class (see GSM 05.02).

If for any reason the mobile station’s multislot class is not respected by the poll, the mobile station need not respond to the poll.

In the case of simultaneous uplink and downlink TBFs, the transmission of the polling response takes precedence over the transmission of allocated uplink radio blocks. If transmission of the poll response would result in more than the maximum Tx or sum of Rx and Tx timeslots per TDMA frame allowed by the multislot class, transmission of the highest numbered PDCH(s) shall be omitted.

8.1.2.3 Spare

8.1.2.4 Resource Reassignment for Downlink

The network initiates resource reassignment by sending a PACKET DOWNLINK ASSIGNMENT or PACKET TIMESLOT RECONFIGURE message on the downlink PACCH. This message indicates a change in resources in the same TBF. The Control Ack bit in the message shall be set to '0'. During the reassignment TFI is allowed to be changed. Mobile shall use the TFI indicated in the PACKET DOWNLINK ASSIGNMENT when using the resource indicated in the message.

The network is not allowed to change the RLC mode of an already established TBF during resource reallocation. Change of RLC mode shall be achieved through release of on-going TBF and establishment of a new TBF with the newly requested RLC mode using the procedures described in subclauses 9.3.2.5 or 9.3.3.5.

On receipt of a PACKET DOWNLINK ASSIGNMENT or PACKET TIMESLOT RECONFIGURE message, and after the TBF starting time, if present, the mobile station shall switch to the assigned PDCHs.Upon switching to the new PDCHs the mobile station shall restart timer T3190.

When the mobile station receives an RLC/MAC block addressed to itself on any of the new assigned resources it shall restart timer T3190. If timer T3190 expires, the mobile station shall perform an abnormal release with return to CCCH or PCCCH (see subclause 8.7.1).

8.1.2.4.1 Abnormal cases

These abnormal cases apply during resource reassignment for downlink (see subclause 8.1.2.4).

If a failure occurs on the mobile station side before the new TBF has been successfully established, the newly reserved resources are released. The subsequent behaviour of the mobile station depends on the type of failure and previous actions:

- If a mobile station receives a PACKET DOWNLINK ASSIGNMENT or PACKET TIMESLOT RECONFIGURE message and detects an invalid Frequency Parameters information element in the message, the mobile station shall perform an abnormal release with system information (see subclause 8.7.3), performing a partial acquisition of system information messages containing frequency information.

- If the information in the PACKET TIMESLOT RECONFIGURE does not properly specify an uplink and downlink PDCH or violates the mobile station's multislot capabilities, the mobile station shall perform an abnormal release with random access (see subclause 8.7.2).

- If a failure in the PACKET TIMESLOT RECONFIGURE is due to any other reason, the mobile station shall abort the procedure and perform an abnormal release with random access (see subclause 8.7.2).

- If the information available in the mobile station, after the reception of a PACKET DOWNLINK ASSIGNMENT message does not satisfactorily define a PDCH, the mobile station shall ignore the PACKET DOWNLINK ASSIGNMENT message.

- If the mobile station is not operating the uplink TBF in half duplex mode and receives a PACKET DOWNLINK ASSIGNMENT message containing different frequency parameters than are currently in effect for the uplink TBF, the mobile station shall ignore the PACKET DOWNLINK ASSIGNMENT message and continue normal operation of the uplink TBF.

- If the mobile station is operating the uplink TBF in half duplex mode and receives a PACKET DOWNLINK ASSIGNMENT message that does not indicate half duplex mode, the mobile station shall ignore the PACKET DOWNLINK ASSIGNMENT.

- If a failure in the PACKET DOWNLINK ASSIGNMENT is due to any other reason, the mobile station shall abort the procedure. If an uplink TBF exists, the mobile station shall continue the normal operation of the uplink TBF. If an uplink TBF does not exist, the mobile station shall perform an abnormal release with return to CCCH or PCCCH (see subclause 8.7.1).

8.1.2.5 Establishment of uplink TBF

The mobile station may request establishment of an uplink transfer during a downlink TBF by including a Channel Request Description information element in the PACKET DOWNLINK ACK/NACK message Initiation is triggered by a request from upper layers to transfer a LLC PDU. The request from upper layers specifies a Radio Priority to be associated with the packet transfer. Upon such a request,

- if access to the network is allowed, according to the latest values for authorized special access classes that the mobile station has received (see subclause 7.1.1), the mobile station shall initiate the packet access procedure.

- otherwise, the RR sublayer in the mobile station shall reject the request.

The mobile station initiates the packet access procedure by sending the Channel Request Description information element in the PACKET DOWNLINK ACK/NACK message on the PACCH and starting timer T3168.

On receipt of a Channel Request Description information element in the PACKET DOWNLINK ACK/NACK message, the network may assign radio resources to the mobile station on one or more PDCHs by transmitting a PACKET UPLINK ASSIGNMENT or PACKET TIMESLOT RECONFIGURE message on the PACCH, or may reject the request by sending a PACKET ACCESS REJECT message on the PACCH. If the PACKET TIMESLOT RECONFIGURE message is sent, then the message shall contain the UPLINK_TFI_ASSIGNMENT field.

A mobile allocation or reference frequency list, received as part of an uplink assignment, replaces the previous parameters and shall be used until a new assignment is received or the MS enters to the packet idle mode.

On receipt of a PACKET UPLINK ASSIGNMENT or PACKET TIMESLOT RECONFIGURE message the mobile station shall follow the procedure below. On reception of a uplink assignment the mobile station shall stop timer T3168.

If the mobile station is not assigned to operate half duplex mode, the mobile station shall, after expiry of the TBF starting time, if present, act upon the uplink assignment.

If the mobile station is assigned to operate in half duplex mode, the mobile station shall, after expiry of the TBF starting time, if present, stop the downlink TBF, save the RLC state variables associated with the downlink TBF and save the state of the following timers:

T3190 Wait for Valid Downlink Data Received from the Network;

T3192 Wait for Release of the TBF after reception of the final block.

Whenever a mobile station operating on a downlink TBF in half duplex mode receives a uplink assignment on the PACCH and has previously saved the state of the uplink TBF and not since entered idle mode, the mobile station shall restore the saved uplink RLC state variables and timer values.

If the mobile station is operating the downlink TBF in half duplex mode and receives a PACKET TIMESLOT RECONFIGURE message it shall exit half duplex mode and act on the PACKET TIMESLOT RECONFIGURE.

The mobile station shall then switch to the assigned uplink PDCHs and begin to send RLC data blocks on the assigned PDCH(s). The TLLI shall not be included in any of the uplink RLC data blocks in that case.

On receipt of a PACKET ACCESS REJECT message that contains a Reject structure addressed to the mobile station, the mobile station shall stop timer T3168 and indicate a packet access failure to upper layer.

If the PACKET ACCESS REJECT message contains a WAIT_INDICATION field in a Reject structure addressed to the mobile station, the mobile station shall start timer T3172 with the indicated value (Wait Indication). The mobile station is not allowed to make a new attempt for packet access in the same cell until timer T3172 expires, but may attempt packet access in an other cell after successful cell reselection.

If timer T3168 expires, the mobile station shall retransmit the Channel Request Description information element in the next PACKET DOWNLINK ACK/NACK message unless it has been transmitted four times in which case the mobile station shall perform an abnormal release with random access. If the downlink TBF is released, including expiry of timer T3192, before expiry of timer T3168 the mobile station shall stop timer T3168 and perform an abnormal release with random access.

8.1.2.5.1 Abnormal cases

If a failure occurs on the mobile station side before the new TBF has been successfully established, the newly reserved resources are released. The subsequent behaviour of the mobile station depends on the type of failure and previous actions.

- If the mobile station has been assigned more PDCHs than it supports according to its mobile station multislot class, the mobile station shall reinitiate the access unless it has already been attempted 4 times, in which case, the mobile station shall perform the abnormal release with random access .(see subclause 8.7.1).

- If the mobile station is not operating the downlink TBF in half duplex mode and receives a PACKET UPLINK ASSIGNMENT message containing different frequency parameters than are currently in effect for the downlink TBF, the mobile station shall ignore the PACKET UPLINK ASSIGNMENT message, continue normal operation of the downlink TBF, and reinitiate the access unless it has already been attempted 4 times, in which case, the mobile station shall perform the abnormal release with random access (see subclause 8.7.1).

- If the mobile station is operating the downlink TBF in half duplex mode and receives a PACKET UPLINK ASSIGNMENT message that does not indicate half duplex mode, the mobile station shall ignore the PACKET UPLINK ASSIGNMENT.
- If a failure in the PACKET UPLINK ASSIGNMENT is due to any other reason, the mobile station shall abort the procedure and continue the reception of downlink PDUs.
- If the information in the PACKET TIMESLOT RECONFIGURE does not properly specify a set of uplink and downlink PDCH(s) or violates the mobile station's multislot capabilities, the mobile station shall perform an abnormal release with random access. (see subclause 8.7.1).
- If the PACKET TIMESLOT RECONFIGURE does not include a correct UPLINK_TFI_ASSIGNMENT field, then the mobile station shall perform an abnormal release with random access. (see subclause 8.7.1).
- If a failure in the PACKET TIMESLOT RECONFIGURE is due to any other reason, the mobile station shall perform an abnormal release with random access. (see subclause 8.7.1).
- If the failure is due to any other reason, the mobile station shall abort the procedure and perform an abnormal release with random access (see subclause 8.7.2).

8.1.2.6 Spare

8.1.2.7 Fixed allocation neighbour cell power measurements

A mobile station operating in half duplex mode may be directed by the network to perform neighbour cell power measurements in predefined gaps via the Measurement Mapping parameters. The location in time and the size of the gaps are signalled by the following parameters:

- the starting time of the first TDMA frame of the first gap;
- a bitmap indicating the timeslots that are part of the gap; and
- the number of RLC/MAC block periods between gaps.

If the mobile has received the Measurement Mapping parameters, the mobile station need not decode the radio blocks(s) comprising the gap during each occurrence of the gap.

A mobile station not operating in half duplex mode or that has not received the Measurement Mapping parameters, shall perform a neighbour cell power measurement in 24 of 26 TDMA frames. If the mobile station's multislot class and the assigned timeslot configuration for uplink TBF and downlink TBF simultaneously in progress prevent the mobile station from making these measurements (T_{ra} and T_{tb} requirements should be fulfilled), the downlink TBF assignment shall be considered invalid and the procedures of subclause 8.1.1.1.3.1 apply.

8.1.2.8 Network initiated abnormal release of downlink TBF

The network may initiate immediate abnormal release of a downlink TBF by transmitting a PACKET TBF RELEASE message to the mobile station on the PACCH.

The mobile station shall immediately stop monitoring its assigned downlink PDCHs. If a valid RRBP field is received as part of the Packet TBF Release message, the mobile station shall transmit a PACKET CONTROL ACKNOWLEDGMENT message in the uplink radio block specified.

If there is no on-going uplink TBF, the mobile station then shall enter packet idle mode. Upon entering packet idle mode, the mobile station shall apply DRX mode procedures as specified in subclause 5.5.1.5.

8.1.3 Concurrent TBF procedures for half duplex operation

8.1.3.1 Spare

8.1.3.2 Spare

A mobile station of multislot class 19 through 29 (see GSM 05.02) not operating in half duplex mode shall follow the procedures of subclauses 8.1.1.3.5 and 8.1.2.5. If uplink and downlink TBFs are already established, the network may send a PACKET TIMESLOT RECONFIGURE message in order to change the uplink and downlink resource allocation of the on-going TBFs. In the message the network may assign a new downlink and/or uplink TFI to be used for the TBFs. For multislot class 19 through 29 (see GSM 05.02), if the assignment message indicates half duplex mode operation, the procedures defined in this subclause shall be followed.

Procedures are defined to:

- allow the network and mobile station to save the state of one TBF to allow data transfer in the other TBF; and
- allow a TBF whose state has been saved to be restored at release of the active TBF.

8.1.3.2.1 Saving downlink TBF state and initiating uplink TBF

A mobile station operating using the fixed allocation medium access mode may initiate an uplink TBF during a downlink TBF using the procedure defined in subclause 8.1.2.5.

8.1.3.2.2 Saving downlink TBF state and restoring uplink TBF state

During a downlink TBF the mobile station may indicate that it wishes to transfer RLC data on the uplink TBF by initiating the procedure defined in subclause 8.1.2.5.

8.1.3.2.3 Ending downlink TBF and restoring uplink TBF state

If the network sends an RLC data block with the FBI field set to indicate the last RLC data block of the TBF and an associated uplink TBF for the mobile station exists, the network shall also transmit a PACKET UPLINK ASSIGNMENT message on the downlink PACCH to the mobile station.

If a mobile station receives an RLC data block with the FBI set to indicate the last RLC data block of the TBF and an associated uplink TBF for the mobile station exists, the mobile station shall follow the downlink TBF release procedures defined in subclause 9.3.2.5 or subclause 9.3.3.5. If the mobile station receives an uplink assignment during the release procedure and a conflict exists between the downlink and uplink allocations, the mobile station shall first complete the downlink TBF procedures and then the mobile station shall act upon the uplink assignment.

8.1.3.2.4 Saving uplink TBF state and initiating downlink TBF

The network may initiate a downlink TBF during an uplink TBF to a mobile station operating using the fixed allocation medium access mode by using the procedure defined in subclause 8.1.1.3.5.

8.1.3.2.5 Saving uplink TBF state and restoring downlink TBF state

The mobile station sending RLC data on an uplink TBF and with an active but saved downlink TBF may be commanded by the network to save the state of the uplink TBF and restore the state of the downlink TBF and then operate the downlink TBF. Upon receipt of a PACKET DOWNLINK ASSIGNMENT message, the mobile station shall follow the procedure in subclause 8.1.1.3.5.

8.1.3.2.6 Ending uplink TBF and restoring downlink TBF state

A mobile station operating in the fixed allocation medium access mode shall, if a downlink TBF exists, release its uplink TBF by following the procedures in subclause 9.3.2.3 or subclause 9.3.3.3 and immediately begin to monitor the downlink PDCH(s) allocated in its downlink TBF.

8.2 Packet PDCH Release

The network may broadcast the PACKET PDCH RELEASE message on PACCH to indicate one or more timeslots is no longer available for packet data service.

When a mobile station receives a PACKET PDCH RELEASE message without a TIMESLOTS_AVAILABLE field, it shall immediately stop transmitting and receiving on the PDCH on which the PACKET PDCH RELEASE message was received, remove that PDCH from its list of assigned PDCHs.

When a mobile station receives a PACKET PDCH RELEASE message containing a TIMESLOTS_AVAILABLE field, it shall immediately stop transmitting and receiving on all assigned PDCHs, which are indicated as not present in the TIMESLOTS_AVAILABLE field, remove those PDCHs from its list of assigned PDCHs.

If an uplink TBF in fixed allocation mode was in progress and if one of timeslots that are being released is its downlink PACCH timeslot, the mobile station shall temporarily read all downlink blocks that it is able to decode according to its multislot capability, on all of its remaining assigned PDCHs, and act upon any RLC/MAC control message that is addressed to it, until another downlink PACCH timeslot is assigned. If the mobile station's multislot capability does not allow it to monitor the downlink of any of its assigned PDCHs, it shall perform an abnormal release with random access.

If all of the mobile station's assigned PDCHs are removed from its list of assigned PDCH, and, if an uplink TBF was in progress, the mobile station shall perform an abnormal release with random access (see subclause 8.7.2). If no uplink TBF was in progress, the mobile station shall perform an abnormal release with return to CCCH or PCCCH (see subclause 8.7.1).

8.3 Procedure for measurement report sending in Packet Transfer mode

The procedure for NC measurement report sending shall be initiated by the mobile station at expiry of the NC measurement report interval timer T3158 (see subclause 5.6.1). At expiry of the timer T3158 the mobile station shall restart the timer T3158, perform the measurements and send the PACKET MEASUREMENT REPORT message containing the 'NC measurement report struct' on PACCH.

An EXT measurement report shall only be reported if the measurements have been collected when the MS enters Packet Transfer mode(see 05.08).

Following a downlink TBF establishment, the PACKET MEASUREMENT REPORT message shall not be sent on the uplink PACCH associated with this TBF until two PACKET DOWNLINK ACK/NACK messages has been sent to the network.

8.4 Network controlled cell reselection procedure

A cell reselection is made controlled either by the mobile station or by the network.

When the cell reselection is made controlled by the mobile station, the mobile station shall apply the cell reselection procedure defined in subclause 5.5.1.1.

When a cell reselection is initiated by the network for an individual mobile station, the cell change order procedure is started by sending a PACKET CELL CHANGE ORDER message to the mobile station on the PCCCH or PACCH.

The PACKET CELL CHANGE ORDER message contains:

- The characteristics of the new cell that are necessary to identify it (i.e. BSIC + BCCH frequency);
- The NC measurement parameters valid for the mobile station in the new cell (NETWORK_CONTROL_ORDER and optionally: NC_NON_DRX_PERIOD, NC_REPORTING_PERIOD_I and NC_REPORTING_PERIOD_T).
- The IMMEDIATE_REL parameter.

Upon receipt of the PACKET CELL CHANGE ORDER message the mobile station shall start timer T3174 and apply the cell reselection procedure defined in subclause 5.5.1.1. with the additional rule that an immediate abort of operation in the old cell may be required by the network through the IMMEDIATE_REL field.

If the timers related to measurement reporting expire while the reselection procedure has not yet been completed, these timers shall be restarted so that the mobile station resumes the measurement reporting procedures once camped on the new cell.

8.4.1 Network controlled cell reselection completion

The mobile station regards the procedure as completed when it has received a successful response to its CHANNEL REQUEST or PACKET CHANNEL REQUEST message on the new cell. The CHANNEL REQUEST may be for establishing a dedicated connection or an uplink TBF. It shall then stop timers T3174.

If timer T3174 expires before a response to the CHANNEL REQUEST or PACKET CHANNEL REQUEST message has been received on the new cell, or, if an IMMEDIATE ASSIGNMENT REJECT or PACKET ACCESS REJECT message is received from the new cell, or, if the contention resolution procedure fails on the new cell, then the mobile station shall start timer T3176 and return to the old cell. If the mobile station was in packet idle mode or in downlink packet transfer mode before the cell change, the mobile station shall initiate a random access on the old cell, with access type "single block without TBF establishment", and then transmit the PACKET CELL CHANGE FAILURE message on the single block. If the mobile station was in uplink packet transfer mode or in a simultaneous uplink and downlink packet transfer mode before the cell change, the mobile station shall establish a new uplink TBF and send the PACKET CELL CHANGE FAILURE message on this TBF. The mobile station shall then resume its uplink transfer on this TBF. When the mobile station has sent a PACKET CELL CHANGE FAILURE message, timer T3176 shall be stopped. If T3176 expires and the mobile station was previous in an uplink packet transfer mode or in a simultaneous uplink and downlink packet transfer mode on the old cell, the mobile station shall perform the abnormal release with random access. If the mobile station was previous in a downlink packet transfer mode only on the old cell the mobile station shall perform an abnormal release with return to CCCH or PCCCH.

8.4.2 Abnormal cases

On the mobile station side, if the PACKET CELL CHANGE ORDER message instructs the mobile station to use a frequency that it is not capable of using, then the mobile station shall return a PACKET CELL CHANGE FAILURE message with cause "frequency not implemented"

If the PACKET CELL CHANGE ORDER message is received by the mobile while a circuit switched connection is on-going, then the mobile station shall return a PACKET CELL CHANGE FAILURE message with the cause "on-going CS connection".

If the PACKET CELL CHANGE ORDER message is received by a mobile performing an anonymous access, the mobile station shall return a PACKET CELL CHANGE FAILURE message with the cause "anonymous access".

If the PACKET CELL CHANGE ORDER message is received while the mobile is in GMM Standby state, the mobile shall return a PACKET CELL CHANGE FAILURE,

- if the GMM Ready timer has a negotiated value equal to zero, with the cause set to "Forced to the Standby state",
- if the GMM Ready timer has a negotiated value not equal to zero, with the cause set to "GMM Standby state".

The message PACKET CELL CHANGE FAILURE is sent on the PACCH if an uplink or a downlink TBF exists.

If no TBF exists, the mobile station shall initiate a random access, with access type "single block without TBF establishment", and then transmit the PACKET CELL CHANGE FAILURE message on the single block.

If a TBF exist, the mobile station shall remain on the current PDCH(s).

On the network side, lower layer failures occurring on the old channels after the sending of the PACKET CELL CHANGE ORDER message are ignored.

8.5 Measurement Order procedures in Packet Transfer mode

The network may initiate the measurement order procedure by sending a PACKET MEASUREMENT ORDER message on the PACCH to a mobile station in packet transfer mode.The PACKET MEASUREMENT ORDER message overrides a broadcast PSI5 message.

The PACKET MEASUREMENT ORDER message may also contain the following optional parameters:

- NC Measurement Parameters (NETWORK_CONTROL_ORDER; NC_NON_DRX_PERIOD; NC_REPORTING_PERIOD_I; NC_REPORTING_PERIOD_T; NC_FREQUENCY_LIST);
- EXT Measurement Parameters (EXT_MEASUREMENT_ORDER; EXT_REPORTING_TYPE; EXT_REPORTING_PERIOD; INT_FREQUENCY; EXT_FREQUENCY_LIST).

Upon receipt of the PACKET MEASUREMENT ORDER message, the mobile station shall store the received parameters and obey the NETWORK_CONTROL_ORDER and the EXT_MEASUREMENT_ORDER as specified in GSM 05.08 and in subclause 5.6.

8.6 PACKET CONTROL ACKNOWLEDGEMENT

A PACKET CONTROL ACKNOWLEDGEMENT message shall always be sent in the uplink block specified by the corresponding valid RRBP field of a downlink RLC/MAC control block, and not in any other uplink block that may be allocated to the mobile station. However the transmission of the PACKET CONTROL ACKNOWLEDGEMENT takes precedence over the transmission of allocated uplink radio blocks or the reception of PCCCH or assigned PDTCH radio blocks. If transmission of the PACKET CONTROL ACKNOWLEDGEMENT would result in more than the maximum Tx timeslots per TDMA frame allowed by the multislot class, transmission of the highest numbered PDCH(s) shall be omitted.

8.7 Abnormal cases

The following abnormal cases apply:

- If a mobile station receives a PACKET DOWNLINK ASSIGNMENT assigning a different MAC mode than the MAC mode of an already operating uplink TBF, the PACKET DOWNLINK ASSIGNMENT message shall be ignored.
- If a mobile station receives a PACKET UPLINK ASSIGNMENT assigning a different MAC mode than the MAC mode of an already operating downlink TBF, the PACKET UPLINK ASSIGNMENT message shall be ignored.
- If the PDCH containing the mobile station's only assigned TAI value is removed, the mobile station shall, if it is performing an uplink TFI, perform an abnormal release with random access (see subclause 8.7.2), and otherwise shall perform an abnormal release with return to CCCH or PCCCH (see subclause 8.7.1).
- If the Measurement Parameters (NC and/or EXT) are sent in more than one instance of the PACKET MEASUREMENT ORDER message, the MS shall not obey the measurement order until all instances of the message has been correctly received.
- If the mobile station receives a Timing Advance Index and a Timing Advance Timeslot Number for one direction within a PACKET POWER CONTROL/TIMING ADVANCE message and the corresponding TBF does not exist, the Timing Advance Index and the Timing Advance Timeslot Number for that direction shall be ignored.

8.7.1 Abnormal release with return to CCCH or PCCCH

The mobile station shall abort all TBFs in progress and return to packet idle mode. Upon entering packet idle mode, the mobile shall apply DRX mode procedures as specified in subclause 5.5.1.5.

8.7.2 Abnormal release with random access

The mobile station shall abort all TBFs in progress and its associated resources, return to the CCCH or PCCCH and initiate establishment of a new uplink TBF as defined in subclause 7.1.

8.7.3 Abnormal release with system information

The mobile station shall abort the TBF and its associated resources, immediately return to the BCCH and reread all relevant BCCH and PBCCH information. If the mobile station was performing an uplink TBF when the abnormal release occurred, the mobile station shall then perform an abnormal release with random access (see subclause 8.7.2). Otherwise the mobile station shall perform an abnormal release with return to CCCH or PCCCH (see subclause 8.7.1).

9 Radio Link Control (RLC) procedures in packet transfer mode

The RLC function is responsible for:

- Interface primitives allowing the transfer of Logical Link Control layer PDUs (LLC PDU) between the LLC layer and the MAC function.
- Segmentation of LLC PDUs into RLC data blocks and re-assembly of RLC data blocks into LLC PDU.
- Segmentation of RLC/MAC control messages into RLC/MAC control blocks and re-assembly of RLC/MAC control messages from RLC/MAC control blocks.
- Backward Error Correction (BEC) procedures enabling the selective retransmission of RLC data blocks.

In this clause Packet Ack/Nack refers to any of the following messages:

- PACKET DOWNLINK ACK/NACK
- PACKET UPLINK ACK/NACK

9.1 Procedures and parameters for peer-to-peer operation

A TBF is comprised of two peer entities which are RLC endpoints. Each RLC endpoint has a receiver that receives RLC/MAC blocks. Each RLC endpoint also has a transmitter that transmits RLC/MAC blocks.

Each endpoint's receiver has a receive window of size k (see subclause 9.1.9). In RLC acknowledged mode, the receive window is defined by the receive state variable V(Q) in the following inequality[$V(Q) \leq BSN < V(Q)+k$] modulo 128 (for the method of interpreting inequalities in this format refer to subclause 9.1.8). All BSNs which meet that criteria are valid within the receive window. In RLC unacknowledged mode, all values of BSN are within the receive window.

Each endpoint's transmitter has a transmit window of size k. In RLC acknowledged mode, the transmit window is defined by the send state variable V(S) in the following inequality: [$V(A) \leq BSN < V(S)$] modulo 128, where [$V(S) - V(A)$] modulo 128 $\leq k$. All BSNs which meet that criteria are valid within the transmit window. In RLC unacknowledged mode, all values of BSN are within the transmit window.

9.1.1 Send state variable V(S)

Each RLC endpoint transmitter shall have an associated send state variable V(S). V(S) denotes the sequence number of the next in-sequence RLC data block to be transmitted. V(S) can take on the value 0 through 127. V(S) shall be set to the value 0 at the beginning of each TBF in which the RLC endpoint is the transmitter. The value of V(S) shall be incremented by 1 after transmission of the RLC data block with BSN = V(S). In RLC acknowledged mode, V(S) shall not exceed V(A) modulo 128 by more than the maximum allowed number of outstanding RLC data blocks k.

9.1.1a Control send state variable V(CS)

The network RLC endpoint transmitter shall have one instance of an associated control send state variable V(CS) for each parallel control transaction identified by the RTI field of the RLC/MAC control block header. V(CS) denotes the sequence number of the next in-sequence RLC/MAC control block to be transmitted for the control transaction. V(CS) can take on the values 0 or 1. V(CS) shall be set to the value 0 prior to the transmission of each RLC/MAC control block that contains the first octet of an RLC/MAC control message of the control transaction and the value of V(CS) shall be set to 1 after the transmission of the RLC/MAC control block with RBSN = 0.

9.1.2 Acknowledge state variable V(A)

In RLC acknowledged mode, each RLC endpoint transmitter shall have an associated acknowledge state variable V(A). V(A) contains the BSN value of the oldest RLC data block that has not been positively acknowledged by its peer. V(A) can take on the values 0 through 127. V(A) shall be set to the value 0 at the beginning of each TBF in which the RLC endpoint is the transmitter. The value of V(A) shall be updated from the values received from its peer in the received block bitmap (RBB) of the Packet Ack/Nack message (see subclause 9.1.8)

Furthermore, [V(S) - V(A)] modulo 128 ≤ k.

9.1.3 Acknowledge state array V(B)

In RLC acknowledged mode, each RLC endpoint transmitter shall have an associated acknowledge state array (V(B)). V(B) is an array of 128 elements indicating the acknowledgement status of k previous RLC data blocks. The array is indexed relative to the acknowledge state variable V(A) modulo 128. The values of V(B) shall be updated from the values received from its peer in the received block bitmap (RBB) of the Packet Ack/Nack message (see subclause 9.1.8).

The transmitter shall transmit the oldest RLC data block whose corresponding element in V(B) indexed relative to V(A) has the value NACKED. As each RLC data block is transmitted the corresponding element in V(B) is set to the value PENDING_ACK.

If [V(S) < V(A) + k] modulo 128 and no RLC data blocks have a corresponding element in V(B) with the value NACKED, the RLC data block with BSN = V(S) shall be transmitted and the corresponding element in V(B) shall be set to the value PENDING_ACK. If there are no further RLC data blocks available for transmission (i.e. the RLC data block with BSN= V(S) does not exist), the sending side shall transmit the oldest RLC data block whose corresponding element in V(B) has the value PENDING_ACK, then the next oldest block whose corresponding element in V(B) has the value PENDING_ACK, etc. If all RLC data blocks whose corresponding element in V(B) has the value PENDING_ACK have been transmitted once, the process shall be repeated beginning with the oldest RLC data block.

If V(S) = V(A) + k modulo 128 (i.e., the transmit window is stalled), the sending side shall transmit the oldest RLC data block whose corresponding element in V(B) has the value PENDING_ACK, then the next oldest RLC data block whose corresponding element in V(B) has the value PENDING_ACK, etc. If all RLC data blocks whose corresponding element in V(B) has the value PENDING_ACK has been transmitted once, the process shall be repeated beginning with the oldest RLC data block. This process of transmitting the oldest RLC data blocks whose value in V(B) has the value PENDING_ACK shall continue indefinitely.

When an element in V(B) falls outside of the active transmit window, i.e., [V(A) ≤ BSN < V(S)] modulo 128, the element shall be set to the value INVALID.

If the mobile station is the transmitter, it shall start an instance of timer T3198 for each RLC data block sent. The timer T3198 shall have the expiry value set to BS_CV_MAX block periods.

9.1.4 Block sequence number BSN

Each RLC data block contains a block sequence number (BSN) field that is 7 bits in length. At the time that an in-sequence RLC data block is designated for transmission, the value of BSN is set equal to the value of the send state variable V(S).

9.1.4a Reduced Block Sequence Number RBSN

Each downlink RLC/MAC control block contains a Reduced Block Sequence Number (RBSN) bit. At the time that an in-sequence RLC/MAC control block is designated for transmission, the value of RBSN is set equal to the value of the control send state variable V(CS).

9.1.5 Receive state variable V(R)

Each RLC endpoint receiver shall have an associated receive state variable V(R). The receive state variable denotes the BSN which has a value one higher than the highest BSN yet received (modulo 128), therefore representing the end of the receiver window. V(R) shall be set to the value '0' at the beginning of each TBF in which the RLC endpoint is the receiver. V(R) can take on the value 0 through 127.

In RLC acknowledged mode, V(R) shall be set to [BSN' + 1] modulo 128, where BSN' is the BSN of most recently received RLC data block, provided the RLC data block was error free and [V(R) ≤ BSN' < V(Q) + k] modulo 128.

In RLC unacknowledged mode, V(R) shall be set to [BSN' + 1] modulo 128, where BSN' is the BSN of most recently received RLC data block.

9.1.6 Receive window state variable V(Q)

Each RLC endpoint receiver shall have an associated receive window state variable V(Q). The receive window state variable denotes the lowest BSN not yet received (modulo 128), therefore representing the start of the receiver window. V(Q) shall be set to the value 0 at the beginning of each TBF in which the RLC endpoint is the receiver. The receive window state variable can take on the value 0 through 127.

In RLC acknowledged mode, the value of V(Q) shall be updated when the RLC receiver receives the RLC data block whose BSN is equal to V(Q). The value of V(Q) shall then be set to the value of the BSN in the receive window that has not yet been properly received and which minimises the expression [BSN – V(R)] modulo 128, or it shall be set to V(R) if all RLC data blocks in the receive window have been received properly.

In RLC unacknowledged mode, if [V(R) - V(Q)] mod 128 > k after updating V(R), then V(Q) is set to [V(R) - k] mod 128.

9.1.7 Receive state array V(N)

Each RLC endpoint receiver shall have an associated receive state array V(N). V(N) is an array of 128 elements indicating the receive status of k previous RLC data blocks. The array is indexed relative to the receive state variable V(R) modulo 128. When an RLC data block is received with BSN such that [V(Q)≤ BSN < V(R)] modulo 128, the corresponding element in V(N) is set to the value RECEIVED.

When an element in V(N) falls outside of the active window (i.e., [V(Q) + k ≤ BSN < V(Q)] modulo 128) the element is set to the value INVALID.

9.1.8 Starting sequence number (SSN) and received block bitmap (RBB)

The Packet Ack/Nack message contains a starting sequence number (SSN) and a received block bitmap (RBB). The Packet Ack/Nack message is sent by the RLC receiver and is received by the RLC transmitter. The SSN and RBB are determined as defined in this subclause and transmitted in both RLC acknowledged and RLC unacknowledged mode. The SSN and RRB may be ignored by the RLC transmitter in unacknowledged mode.

The BSN values specified in the RBB are interpreted by subtracting the bit position in the bitmap from the starting sequence number (SSN) modulo 128.

A valid BSN value in the RBB is one that is in the range [V(A) ≤ BSN < V(S)] modulo 128.

These inequalities shall be interpreted in the following way:

BSN is valid if, and only if, [BSN - V(A)] modulo 128 < [V(S) - V(A)] modulo 128.

At the RLC transmitter:

> For each bit in the RBB whose corresponding BSN value is within the transmit window, if the bit contains the value '1', the corresponding element in V(B) indexed relative to SSN shall be set to the value ACKED. If the bit contains the value '0', the element in V(B) shall be set to the value NACKED. A bit within the RBB whose corresponding BSN is not within the transmit window, shall be ignored. If the RLC transmitter is on the mobile station side, the bit contains the value '0' and the instance of timer T3198 corresponding to BSN is not expired (i.e., the RLC data block was recently (re)transmitted and thus can not be validly negatively acknowledged in this particular Packet Ack/Nack message), the element in V(B) shall not modified.

At the RLC receiver:

The starting sequence number (SSN) is assigned the value of the receive state variable V(R). The received block bitmap (RBB) is assigned the k elements whose indices in the receive state array V(N) at the receiver range from [V(R) - 1] modulo 128 to [V(R) - k] modulo 128. For each bit in the bitmap, the bit is assigned the value '1' if the corresponding element in V(N) indexed relative to SSN has the value RECEIVED. The bit is assigned the value '0' if the element in V(N) has the value INVALID.

When polled within a downlink RLC data block, the mobile station shall acknowledge all the RLC data blocks that have been correctly received up to and including the radio block where the MS is polled.

As an implementation option, the MS may also acknowledge as many as possible of the RLC data blocks that are correctly received after the radio block where the MS is polled.

9.1.9 Window Size

The window size (k) shall be 64.

9.1.10 Segmentation of LLC PDUs into RLC data units

Segmentation of LLC PDUs is supported to allow transport of LLC PDUs larger than the the data field of a single RLC data block. If the contents of an LLC PDU do not fill an integer number of RLC data blocks, the beginning of the next LLC PDU shall be placed within the final RLC data block of the first LLC PDU, with no padding or spacing between the end of the first LLC PDU and the beginning of the next. If the final LLC PDU in the TBF does not fill an integer number of RLC data blocks, filler octets shall be used to fill the remainder of the RLC data block.

The received (and segmented) LLC PDUs shall be put into RLC data blocks in the same order as they are received from higher layers. A Block Sequence Number (BSN) is included in the header of each RLC data block to number the RLC data block. The RLC data blocks are to be numbered consecutively, modulo 128, to allow re-assembly of the LLC PDUs on the receiving side.

Once an RLC data block has been transmitted over the physical link, should it be necessary to re-transmit the RLC data block, it shall be re-transmitted using the same channel coding scheme, BSN, and CV as it had in the previous transmission.

9.1.11 Re-assembly of LLC PDUs from RLC data units

RLC data blocks shall be collected at the receiver until all RLC data blocks comprising an LLC PDU have been received. The RLC headers shall be removed from each RLC data block at this time and the RLC data units re-assembled into an LLC PDU and passed to the next higher layer. The size of the LLC PDU delivered to the higher layer shall not exceed 1560 octets. Any octet received beyond this maximum limit and until the next identified LLC PDU boundary shall be discarded.

During RLC acknowledged mode operation, received LLC PDUs shall be delivered to the higher layer in the order in which they were originally transmitted.

During RLC unacknowledged mode operation, received LLC PDUs shall be delivered to the higher layer in the order in which they are received. Fill bits having the value '0' shall be substituted for RLC data units not received. The number of fill bits substituted shall be determined using table 2. In the uplink direction the channel coding scheme shall be the commanded channel coding scheme. In the downlink direction the channel coding scheme shall be the channel coding scheme of the last correctly received RLC data block. If no RLC data blocks have been correctly received, by the mobile station the requested channel coding scheme shall be used. If no requested channel coding scheme has been sent to the network, the mobile station shall use the number of fill bits for CS-1.

Table 2: RLC unacknowledged mode fill bits

Channel Coding Scheme	Number of fill bits
CS-1	160
CS-2	240
CS-3	288
CS-4	400

9.1.11a Segmentation of RLC/MAC control messages into RLC/MAC control blocks

The network may segment RLC/MAC control messages into one or two RLC/MAC control blocks depending on the length of the RLC/MAC control message. If the contents of a control message do not fit an integer number of control blocks, filler octets shall be used to fill the remainder of the RLC/MAC control block. Only the last RLC/MAC control block containing elements of the control message shall contain filler octets. The Final Segment (FS) bit of the RLC/MAC control block header shall be set according to whether the RLC/MAC control block contains the final segment of an RLC/MAC control message.

The mobile station shall not segment RLC/MAC control messages.

NOTE: In order to provide the mobile station a Power Reduction value in a RLC/MAC control block, the network may use the segmentation mecchanism although the RLC/MAC control block requires only one RLC/MAC control blockto be transmitted. In that case the RBSN shall be set to '0' and FS shall be set to '1'.

9.1.11b Re-assembly of RLC/MAC control messages from RLC/MAC control blocks

RLC/MAC control blocks shall be collected at the receiver until all RLC/MAC control blocks comprising an RLC/MAC control message have been received.

In packet idle mode, the mobile station shall be capable of receiving eight RLC/MAC control messages in parallel. If the mobile station receives RLC/MAC control blocks containing part of a ninth RLC/MAC control message while it still has RLC/MAC control blocks for eight partially received RLC/MAC control messages, the mobile station shall discard the RLC/MAC control blocks of the oldest partially received message.

In packet transfer mode, the mobile station shall be capable of receiving two RLC/MAC control messages in parallel on the same PDCH. If the mobile station receives RLC/MAC control blocks containing part of a third RLC/MAC control message while it still has RLC/MAC control blocks for two partially received RLC/MAC control messages, the mobile station shall discard the RLC/MAC control blocks of the oldest partially received message.

The mobile station shall start an instance of timer T3200 following the receipt of an RLC/MAC control block whose RTI value does not correspond to the RTI value of a partially received RLC/MAC control message or if the RLC/MAC control blocks were received on different PDCHs. In non-DRX mode the duration of timer T3200 shall be four BS_CV_MAX block periods. In DRX mode the duration of timer T3200 shall be four times the DRX period (see GSM 03.64).

On receipt of an RLC/MAC control block containing a segment of an RLC/MAC control message such that the mobile station now has the complete RLC/MAC control message, the mobile station shall stop the corresponding instance of timer T3200.

If the mobile station discards a partially received RLC/MAC control message while the corresponding instance of timer T3200 is running, the mobile station shall stop the corresponding instance of timer T3200.

On expiry of an instance of timer T3200, the mobile station shall discard and ignore all segments of the corresponding partially received RLC/MAC control message.

Upon successful change of PDCH allocation, the mobile station shall discard all partially received RLC/MAC control messages and stop the corresponding instances of timer T3200.

The mobile station shall discard any control message segment that contains an unknown TFI.

9.1.12 Priority of LLC PDUs

The mobile station shall not transmit LLC PDUs during a TBF that have a lower Radio Priority than the priority that was used at initial access or the priority sent in the last PACKET RESOURCE REQUEST message. The mobile station may change the Radio Priority of an uplink TBF by sending a PACKET RESOURCE REQUEST message to the network (see subclause 8.1.1.1.2 and subclause 8.1.1.3.2).

9.2 Operation during RLC/MAC control message transfer

RLC/MAC control blocks shall be used to transport RLC/MAC control messages. Segments of only one RLC/MAC control message shall be transported per RLC/MAC control block.

RLC/MAC control blocks shall be sent at a higher priority than RLC data blocks.

The receiving side shall determine the length of the RLC/MAC control message contents by interpreting the RLC/MAC control block contents.

No general acknowledgement shall be made as part of the transfer of RLC/MAC control blocks or RLC/MAC control messages. The receiver shall not acknowledge an RLC/MAC control block except when a valid RRBP field is present in the MAC header of the RLC/MAC control block. The receiver shall not acknowledge an RLC/MAC control message except when the RLC/MAC procedures explicitly specify an acknowledgement.

Each downlink RLC/MAC control block header, if present, contains a Radio Transaction Identifier (RTI) field that is 5 bits in length and performs in effect a modulo 32 count of the downlink RLC/MAC control messages sent on a PDCH. The RTI field shall be used to group the RLC/MAC control blocks that make up an RLC/MAC control message. The RTI field allows the transmitting and receiving entities to distinguish between upto 32 RLC/MAC control messages in a single transmit direction therefore allowing upto 32 parallel transactions per PDCH.

The network shall not use the same RTI value at the same time on the same PDCH for two separate RLC/MAC control messages. The network may use the same RTI value at the same time on separate PDCHs. The network shall transmit both segments of a segmented control message on the same PDCH.

9.3 Operation during RLC data block transfer

The RLC ARQ functions support two modes of operation: RLC acknowledged mode, and RLC unacknowledged mode. RLC acknowledged mode operation uses retransmission of RLC data blocks to achieve high reliability. RLC unacknowledged mode operation does not utilize retransmission of RLC data blocks. A TBF may operate in either RLC acknowledged mode or RLC unacknowledged mode.

The mobile station sets the RLC mode of the uplink TBF by setting the RLC_MODE bit to either RLC acknowledged mode or RLC unacknowledged mode in the PACKET RESOURCE REQUEST or the PACKET DOWNLINK ACK/NACK message. In a one phase access, the RLC mode defaults to RLC acknowledged mode.

The network sets the RLC mode of the downlink TBF by setting the RLC_MODE bit in the PACKET DOWNLINK ASSIGNMENT or PACKET TIMESLOT RECONFIGURE message.

9.3.1 Countdown procedure

The mobile station shall send the Countdown Value (CV) in each uplink RLC data block to indicate to the network the absolute BSN (BSN') of the last RLC data block that will be sent in the uplink TBF. The CV shall be calculated as follows.

$$\text{Let integer } x = \text{round}\left(\frac{\text{TBC} - \text{BSN}' - 1}{\text{NTS}}\right).$$

$$\text{Then, } \text{CV} = \begin{cases} x, & \text{if } x \le \text{BS_CV_MAX} \\ 15, & \text{otherwise} \end{cases},$$

where:

TBC = total number of RLC data blocks that will be transmitted in the TBF,

BSN' = absolute block sequence number of the RLC data block, with range from 0 to (TBC - 1),

NTS = number of timeslots assigned to the uplink TBF in the assignment message, with range 1 to 8,

the function round() rounds upwards to the nearest integer,

BS_CV_MAX is a parameter broadcast in the system information,

the division operation is non-integer and results in zero only for (TBC - BSN' - 1) = 0.

The final RLC data block transmitted in the TBF (i.e., the RLC data block with BSN' = TBC - 1) shall have CV set to the value '0'. No other RLC data blocks transmitted during the TBF shall have the value '0'.

Once the mobile station transmits a value of CV other than 15, the mobile station shall transmit exactly (TBC - BSN' - 1) untransmitted RLC data blocks. If the mobile station receives a change in the Channel Coding Command in a PACKET UPLINK ACK/NACK message during the countdown procedure, the mobile station shall act upon the new Channel Coding Command. The mobile station shall then recalculate the CV values for any untransmitted RLC data blocks using the new RLC data block size. If the mobile station successfully complete the contention resolution procedure during one phase access and the countdown procedure already is running the mobile station shall recalculate the CV values for any untransmitted RLC data blocks. Any data that arrives from the higher layer after the commencement of the countdown process shall be sent within a future TBF.

The mobile station may retransmit during the countdown in response to a Packet Ack/Nack or if stalled.

The mobile station may transmit an RLC/MAC control block during the countdown only in response to a poll request.

For fixed allocation, once the MS counts down to zero, at that point the MS forfeits its current uplink allocation and shall not transmit again using that allocation.

If the MS receives a new allocation during the countdown, the MS shall use this new allocation to the end of the countdown procedure. The network shall provide unsolicited uplink resources for any retransmissions that may be required.

9.3.2 Acknowledged mode operation

The transfer of RLC data blocks in the RLC acknowledged mode uses retransmissions of RLC data blocks. The transmitting side numbers the RLC data blocks via the block sequence number (BSN). The BSN is used for retransmission and for reassembly. The receiving side sends PACKET Ack/Nack messages in order to request retransmission of RLC data blocks.

9.3.2.1 Establishment of Temporary Block Flow

The establishment of a TBF occurs as described in clause 7. RLC functions related to the ARQ function shall not operate until RLC data block transfer has been initiated.

If the last uplink TBF ended with an incompletely transmitted LLC PDU or any unacknowledged LLC PDUs, the mobile station shall begin transmission on the new TBF with the oldest unacknowledged LLC PDU.

9.3.2.2 Operation of uplink Temporary Block Flow

The mobile station shall transmit an RLC/MAC block in each assigned uplink data block. RLC/MAC control blocks have preference to RLC data blocks, i.e., temporarily replacing the PDTCH with PACCH.

The network shall send PACKET UPLINK ACK/NACK messages when needed.

The mobile station shall indicate a transmit window stall condition when V(S) = V(A) + k. Upon detecting a transmit window stall condition, the mobile station shall set the Stall indicator (SI) bit in all subsequent uplink RLC data block until the stall condition ceases to exist.

Upon detecting the stall condition the mobile station shall also start timer T3182. Timer T3182 shall be stopped upon reception of a PACKET UPLINK ACK/NACK message that makes V(S) < V(A) + k. If timer T3182 expires, the mobile station shall decrement counter N3102 by PAN_DEC, and perform an abnormal release with random access (see subclause 8.7.2).

Whenever the mobile station receives a PACKET UPLINK ACK/NACK message that allows the advancement of V(S) or V(A), the mobile station shall increment N3102 by PAN_INC, however N3102 shall never exceed the value PAN_MAX. Upon cell reselection the mobile station shall set counter N3102 to the value PAN_MAX. When N3102 ≤ 0 is reached, the mobile station shall perform an abnormal release with cell re-selection. If PAN_DEC, PAN_INC, or PAN_MAX are set to the value 0, counter N3102 shall be disabled.

A mobile station operating with a fixed allocation shall start or restart timer T3184 upon reception of a PACKET UPLINK ACK/NACK message. If timer T3184 expires, the mobile station shall perform an abnormal release with cell re-selection (see subclause 9.4.2).

9.3.2.3 Release of uplink Temporary Block Flow

The mobile station initiates release of the uplink TBF by beginning the countdown process (see subclause 9.3.1). When the mobile station has sent the RLC data block with CV = 0 and there are no elements in the V(B) array set to the value Nacked, it shall start timer T3182 and stop timer T3180, if running. The mobile station shall continue to send RLC data blocks on each assigned uplink data block, according to the algorithm defined in subclause 9.1.3.

If the network has received all RLC data blocks when it detects the end of the TBF (i.e. when CV=0 and V(Q) = V(R)), it shall send the PACKET UPLINK ACK/NACK message with the Final Ack Indicator bit set to '1', include a valid RRBP field in the RLC/MAC control block header and clear counter N3103. If the network has not received all of the RLC data blocks when it detects the end of the TBF, it shall send a PACKET UPLINK ACK/NACK message to the mobile station and if necessary allocate sufficient uplink resources for the mobile station to retransmit the required RLC data blocks.

Upon reception of a PACKET UPLINK ACK/NACK message the mobile station shall stop timer T3182.

If the PACKET UPLINK ACK/NACK message has the Final Ack Indicator bit set to '1', the mobile station shall transmit the PACKET CONTROL ACKNOWLEDGEMENT message and release the TBF. If the mobile station is operating in half duplex mode and received a downlink assignment during the countdown or while timer T3182 was running, it shall then act on the downlink assignment. If there is no ongoing downlink TBF the mobile station shall enter packet idle mode. Upon entering packet idle mode, the mobile shall apply DRX mode procedures as specified in subclause 5.5.1.5.

If the PACKET UPLINK ACK/NACK message requests retransmission of RLC data blocks, the mobile station shall if necessary wait for allocation of uplink resources and then retransmit the RLC data blocks requested, restarting timer T3180 after each block is transmitted. The mobile station shall then start timer T3182 and wait for a PACKET UPLINK ACK/NACK message as above. If the timer T3180 expires, the mobile station performs an abnormal release with random access.

If the mobile station is operating in half duplex mode and received a downlink assignment during the countdown or while timer T3182 was running, and then T3182 expires, the MS shall then immediately act on the downlink assignment and then request an uplink TBF via the Packet Downlink Ack/Nack. Otherwise, if timer T3182 expires the mobile station shall perform an abnormal release with random access (see subclause 8.7.2).

When the network receives the PACKET CONTROL ACKNOWLEDGEMENT message in the radio block indicated by the RRBP field, it may reuse the TFI and USF resources.

If the network does not receive the PACKET CONTROL ACKNOWLEDGEMENT message in the radio block indicated by the RRBP field, it shall increment counter N3103 and retransmit the PACKET UPLINK ACK/NACK message. If counter N3103 exceeds its limit, the network shall start timer T3169. When timer T3169 expires the network may reuse the TFI and USF resources.

9.3.2.4 Operation of downlink Temporary Block Flow

The mobile station receives RLC/MAC blocks on the assigned downlink PDCHs. On each assigned PDCH, the mobile station shall in the RLC header identify the TFI and decode the RLC data blocks intended for the mobile station. The operation during the TBF shall be as defined in subclause 9.1.

9.3.2.5 Release of downlink Temporary Block Flow

The network initiates release of a downlink TBF by sending an RLC data block with the Final Block Indicator (FBI) set to the value '1' and with a valid RRBP field. The RLC data block sent must have the highest BSN' (see clause 9.3.1) of the downlink TBF. The network shall start timer T3191. While timer T3191 is running the network may retransmit the RLC data block with the FBI bit set to the value '1'.

If the mobile station receives an RLC data block with the FBI bit set the value '1' and with a valid RRBP field, the mobile station shall transmit a PACKET DOWNLINK ACK/NACK message in the specified uplink block. The mobile station shall continue to monitor all assigned PDCHs.

Whenever the mobile station receives an RLC data block with a valid RRBP and the mobile station has received all RLC data blocks of the TBF, the mobile station shall send the PACKET DOWNLINK ACK/NACK message with the Final Ack Indicator bit set to '1', stop timer T3190 and start or restart timer T3192.

If the mobile station receives more than one RLC data block with the FBI set to '1', it shall accept the data from only the first one of these blocks.

If the network receives a PACKET DOWNLINK ACK/NACK message before timer T3191 expires, and if retransmissions are required, then the network stops timer T3191 and retransmits necessary RLC data blocks according to the ARQ protocol before re-initiating the release of the downlink TBF. The FBI is set to '1' only if the RLC data block with the highest BSN' of the TBF is retransmitted. If no retransmission is required, the network shall stop timer T3191 and start timer T3193. When T3193 expires the network shall release the TBF.

If timer T3191 expires, then the network shall release the TBF.

If the network has received the PACKET DOWNLINK ACK/NACK message with the Final Ack Indicator bit set to '1' and has new data to transmit for the mobile station, the network may establish a new downlink TBF for the mobile station by sending the PACKET DOWNLINK ASSIGNMENT or PACKET TIMESLOT RECONFIGURE message with the Control Ack bit set to '1' on PACCH. In case the network establishes a new downlink TBF for the mobile station, the network shall stop timer T3193.

If the mobile station, after sending the PACKET DOWNLINK ACK/NACK message with the Final Ack Indicator bit set to '1', receives a PACKET DOWNLINK ASSIGNMENT or PACKET TIMESLOT RECONFIGURE message with the Control Ack bit set to '1' while timer T3192 is running, the mobile station shall stop timer T3192, consider the previous downlink TBF released and act upon the new assignment.

When timer T3192 expires the mobile station shall stop monitoring its assigned downlink PDCHs. If the mobile station is operating in half duplex mode and received an uplink assignment during the TBF release procedure, the mobile station shall then immediately act upon the assignment. Otherwise, and if there is no ongoing uplink TBF, enter packet idle mode. Upon entering packet idle mode, the mobile shall apply DRX mode procedures as specified in subclause 5.5.1.5.

9.3.3 Unacknowledged mode operation

The transfer of RLC data blocks in the RLC unacknowledged mode does not include any retransmissions, except during the release of an uplink TBF where the last transmitted uplink block may be retransmitted (see subclause 9.3.3.3). The block sequence number (BSN) in the RLC data block header is used to number the RLC data blocks for reassembly. The receiving side sends Packet Ack/Nack messages in order to convey the necessary other control signalling (e.g. monitoring of channel quality for downlink transfer or timing advance correction for uplink transfers).

9.3.3.1 Establishment of Temporary Block Flow

If the last uplink TBF ended with an incompletely transmitted LLC PDU, the mobile station shall begin transmission on the new TBF with the last incompletely transmitted LLC PDU.

9.3.3.2 Operation of uplink Temporary Block Flow

The network shall send PACKET UPLINK ACK/NACK messages when needed.

The mobile station shall set the Stall indicator (SI) bit to '0' in all RLC data blocks.

If the mobile station transmits k RLC data blocks without receiving a Packet Ack/Nack message the mobile station shall start timer T3182. Timer T3182 shall be stopped upon reception of a PACKET UPLINK ACK/NACK message. If timer T3182 expires, the mobile station shall decrement counter N3102 by PAN_DEC, and perform an abnormal release with random access (see subclause 8.7.2).

Whenever the mobile station receives a PACKET UPLINK ACK/NACK message, the mobile station shall increment N3102 by PAN_INC, however N3102 shall never exceed the value PAN_MAX. Upon cell reselection the mobile station shall set counter N3102 to the value PAN_MAX. When N3102 ≤ 0 is reached, the mobile station shall perform an abnormal release with cell re-selection. If PAN_DEC, PAN_INC, or PAN_MAX are set to the value 0, counter N3102 shall be disabled.

A mobile station operating with a fixed allocation shall start or restart timer T3184 upon reception of a PACKET UPLINK ACK/NACK message. If timer T3184 expires, the mobile station shall perform an abnormal release with cell re-selection (see subclause 9.4.2).

9.3.3.3 Release of uplink Temporary Block Flow

The mobile station initiates release of the uplink TBF by beginning the countdown process (see subclause 9.3.1). It indicates the end of the TBF by setting the CV value to 0 and starts timer T3182.

If the mobile station is operating in half duplex mode and receives a downlink assignment during the countdown, it shall continue the countdown until complete and then immediately act on the downlink assignment.

When the network detects the end of the TBF (i.e. when CV=0) it shall send a PACKET UPLINK ACK/NACK message with the Final Ack Indicator bit set to '1', include a valid RRBP field in the RLC/MAC control block header and clear counter N3103.

In case the network receives multiple blocks with CV=0, only the first needs to be acknowledged with PACKET UPLINK ACK/NACK message.

Upon reception of a PACKET UPLINK ACK/NACK message the mobile station shall stop timer T3182. If the PACKET UPLINK ACK/NACK message has the Final Ack Indicator bit set to '1', the mobile station shall transmit the PACKET CONTROL ACKNOWLEDGEMENT message and release the TBF. If there is no ongoing downlink TBF the mobile station shall enter packet idle mode. Upon entering packet idle mode, the mobile shall apply DRX mode procedures as specified in subclause 5.5.1.5.

If the PACKET UPLINK ACK/NACK message does not have the Final Ack Indicator bit set to '1', the mobile station shall when possible repeat sending the last block with CV=0 until a PACKET UPLINK ACK/NACK message with Final Ack Indicator bit set to '1' is received. Upon each retransmission of the last block with CV=0, the mobile station shall restart timer T3182. The block with CV=0 shall not be retransmitted more than four times. If the medium access mode is dynamic allocation, the repetitions are transmitted when the mobile station is scheduled USFs. If fixed allocation is used, the mobile station shall transmit the repetitions within any remaining allocated uplink blocks. If timer T3182 expires the mobile station shall release the TBF as if a PACKET UPLINK ACK/NACK message was received.

When the network receives the PACKET CONTROL ACKNOWLEDGEMENT message in the radio block indicated by the RRBP field, it may reuse the TFI and USF resources.

If the network does not receive the PACKET CONTROL ACKNOWLEDGEMENT message in the radio block indicated by the RRBP field, it shall increment counter N3103 and retransmit the PACKET UPLINK ACK/NACK message. If counter N3103 exceeds its limit, the network shall start timer T3169. When timer T3169 expires the network may reuse the TFI and USF resources.

9.3.3.4 Operation of downlink Temporary Block Flow

The mobile station receives RLC/MAC blocks on the assigned downlink PDCHs. On each assigned PDCH, the mobile station shall in the RLC header identify the TFI and decode the RLC data blocks intended for the mobile station. The operation during the TBF shall be as defined in subclause 9.1.

9.3.3.5 Release of downlink Temporary Block Flow

The network initiates release of a downlink TBF by sending an RLC data block with the Final Block Indicator (FBI) set to the value '1' and with a valid RRBP field. The RLC data block sent must have the highest BSN' (see clause 9.3.1) of the downlink TBF. The network shall start timer T3191. The network may retransmit the last block with FBI set to the value '1' and with a valid RRBP field. For each retransmission the timer T3191 is restarted.

For each RLC data block with the FBI bit set to '1' and with a valid RRBP field, the mobile station shall transmit the PACKET CONTROL ACKNOWLEDGEMENT message in the uplink block specified by the RRBP field. The mobile station shall continue to read the assigned downlink PDCHs until the block period pointed to by the RRBP. If the mobile station receives more than one RLC data block with the FBI bit set to '1' and with valid RRBP fields that point the same uplink block period, the mobile station shall transmit the PACKET CONTROL ACKNOWLEDGEMENT message only once. The mobile station shall then stop timer T3190, start timer T3192 and continue to monitor all assigned downlink PDCHs. If the mobile station then receives a subsequent RLC data block with a valid RRBP and the FBI bit set to '1', the mobile station shall retransmit the PACKET CONTROL ACKNOWLEDGEMENT message and restart timer T3192.

If the mobile station receives more than one RLC data block with the FBI set to '1', it shall accept the data from only the first one of these blocks.

If the network receives the PACKET CONTROL ACKNOWLEDGEMENT message before timer T3191 expires, the network shall stop timer T3191 and start timer T3193. When T3193 expires the network shall release the TBF.

If timer T3191 expires, the network shall release the TBF.

If the network has received the PACKET CONTROL ACKNOWLEDGEMENT message and has new data to transmit for the mobile station, the network may establish a new downlink TBF for the mobile station by sending the PACKET DOWNLINK ASSIGNMENT or PACKET TIMESLOT RECONFIGURE message with the Control Ack bit set to '1' on PACCH. In case the network establishes a new downlink TBF for the mobile station, the network shall stop timer T3193.

If the mobile station, after sending the PACKET CONTROL ACKNOWLEDGEMENT message, receives a PACKET DOWNLINK ASSIGNMENT or PACKET TIMESLOT RECONFIGURE message with the Control Ack bit set to '1' while timer T3192 is running, the mobile station shall stop timer T3192, consider the previous downlink TBF released and act upon the new assignment.

When timer T3192 expires the mobile station shall stop monitoring its assigned downlink PDCHs. If the mobile station is operating in half duplex mode and received an uplink assignment during the TBF release procedure, the mobile station shall then immediately act upon the assignment. Otherwise, if there is no ongoing uplink TBF the mobile station shall enter packet idle mode. Upon entering packet idle mode, the mobile shall apply DRX mode procedures as specified in subclause 5.5.1.5.

9.4 Abnormal release cases

9.4.1 Abnormal release with random access

The mobile station shall abort all TBFs in progress and return to the CCCH or PCCCH and initiate establishment of an uplink TBF as defined in subclause 7.1.

9.4.2 Abnormal release with cell reselection

The mobile station shall abort all TBFs in progress. If access to another cell is allowed, i.e. the RANDOM_ACCESS_RETRY bit is set, the mobile station shall perform abnormal cell reselection (see GSM 05.08) and initiate establishment of an uplink TBF as defined in subclause 7.1 on the new cell. The mobile station shall not reselect back to the original cell for T_RESEL seconds if another suitable cell is available. The parameters RANDOM_ACCESS_RETRY and T_RESEL (default value 5 s) are broadcast in PSI 3.

If access to another cell is not allowed, i.e. the RANDOM_ACCESS_RETRY bit is not set, or if no neighbour cells are available, the mobile station shall go to the CCCH or PCCCH and report an RLC/MAC failure to the higher layer.

10 RLC/MAC block structure

A RLC/MAC block consists of a MAC header and a RLC data block or RLC/MAC control block. The RLC/MAC block structure is shown in figure 2.

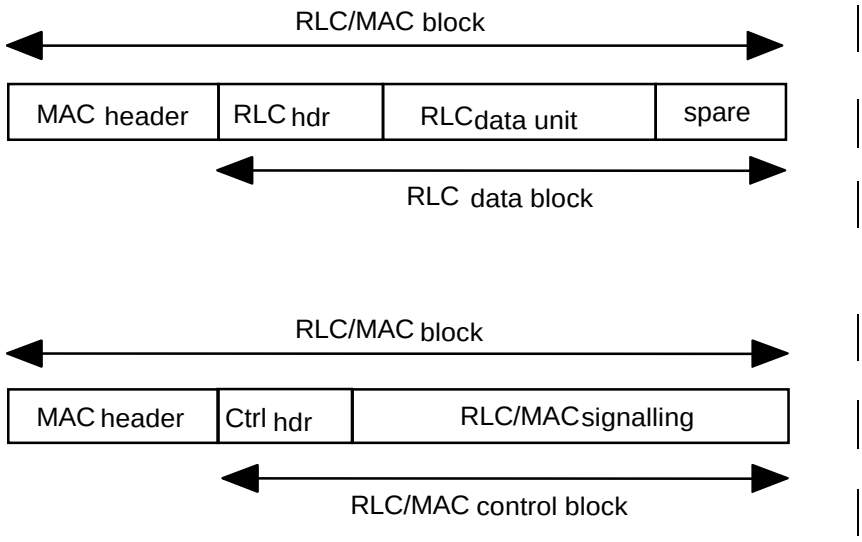

Figure 2: RLC/MAC block structure

10.1 Spare bits

Where the description of RLC/MAC blocks in this Technical Specification contains bits defined to be 'spare bits', these bits shall set to the value '0' by the sending side, and their value shall be ignored by the receiving side.

10.2 RLC data blocks

The RLC data block consists of an RLC header, an RLC data unit, and spare bits. An RLC/MAC block containing an RLC data block may be encoded using any of the available channel coding schemes CS-1, CS-2, CS-3, or CS-4 (see GSM 05.03). RLC/MAC blocks encoded using CS-1 do not contain spare bits. The size of the RLC data block for each of the channel coding schemes is shown in table 3.

Table 3: RLC data block size

Channel Coding Scheme	RLC data block size without spare bits (octets)	Number of spare bits	RLC data block size (octets)
CS-1	22	0	22
CS-2	32	7	32 7/8
CS-3	38	3	38 3/8
CS-4	52	7	52 7/8

10.2.1 Downlink RLC data block

The Downlink RLC data block together with its MAC header is formatted as shown in figure 3.

Bit 8	7	6	5	4	3	2	1	
Payload Type		RRBP		S/P	USF			MAC header
PR			TFI				FBI	Octet 1
BSN							E	Octet 2
Length indicator						M	E	Octet 3 (optional)
. . .								. . .
Length indicator						M	E	Octet M (optional)
RLC data								Octet M+1 . . . Octet N-1 Octet N
spare						spare		(if present)

Figure 3: Downlink RLC data block with MAC header

10.2.2 Uplink RLC data block

The Uplink RLC data block together with its MAC header is formatted as shown in figure 4.

Bit 8	7	6	5	4	3	2	1	
Payload Type		Countdown Value				SI	R	MAC header
spare		TFI					TI	Octet 1
BSN							E	Octet 2
Length indicator						M	E	Octet 3 (optional)
. . .								. . .
Length indicator						M	E	Octet M (optional)
TLLI								Octet M+1 \ Octet M+2 } (optional) Octet M+3 / Octet M+4 /
RLC data								Octet M+5 (M+1 if no TLLI) . . . Octet N-1 Octet N
spare						spare		(if present)

Figure 4: Uplink RLC data block with MAC header

10.3 RLC/MAC control blocks

The RLC/MAC control block consists of a control message contents field and in the downlink direction an optional control header. RLC/MAC control messages shall be transported within RLC/MAC control blocks. An RLC/MAC control blocks shall always be encoded using the coding scheme CS-1 (see GSM 04.04).

10.3.1 Downlink RLC/MAC control block

The Downlink RLC/MAC control block together with its MAC header is formatted as shown in figure 5.

Bit 8	7	6	5	4	3	2	1	
Payload Type		RRBP		S/P	USF			MAC header
RBSN	RTI					FS	AC	Octet 1 (optional)
PR		TFI					D	Octet 2 (optional)
Control Message Contents								Octet M . . . Octet 21 Octet 22

Figure 5: Downlink RLC/MAC control block together with its MAC header

10.3.2 Uplink RLC/MAC control block

The Uplink RLC/MAC control block together with its MAC header is formatted as shown in figure 6.

Bit 8	7	6	5	4	3	2	1	
Payload Type		spare					R	MAC header
Control Message Contents								Octet 1 Octet 2 Octet 3 . . . Octet 21 Octet 22

Figure 6: Uplink RLC/MAC control block together with its MAC header

10.4 Header fields

10.4.1 Uplink state flag (USF) field

The USF field is sent in all downlink RLC/MAC blocks and indicates the owner or use of the next uplink Radio block on the same timeslot (see GSM 05.02). The USF field is three bits in length and eight different USF values can be assigned, except on PCCCH, where the value '111' (USF=FREE) indicates that the corresponding uplink Radio block contains PRACH.

10.4.2 Retry (R) bit

The Retry (R) bit shall indicate whether the mobile station transmitted the CHANNEL REQUEST message (see GSM 04.08) or PACKET CHANNEL REQUEST message one time or more than one time during its most recent channel access. The mobile station shall send the same value for the R bit in each uplink RLC/MAC block of the TBF.

Table 4: Retry (R) bit

bit	
1	Retry (R) bit
0	MS sent channel request message once
1	MS sent channel request message twice or more

10.4.3 Stall indicator (SI) bit

The Stall indicator (SI) bit indicates whether the mobile's RLC transmit window can advance (i.e., is not stalled) or can not advance (i.e., is stalled). The mobile station shall set the SI bit in all uplink RLC data blocks.

Table 5: Stall indicator bit

bit	
2	Stall indicator
0	MS RLC transmit window is not stalled
1	MS RLC transmit window is stalled

10.4.4 Supplementary/Polling (S/P) Bit

The S/P bit is used to indicate whether the RRBP field is valid or not valid.

Table 6: Supplementary/Polling (S/P) bit

bit	
4	S/P
0	RRBP field is not valid
1	RRBP field is valid

10.4.5 Relative Reserved Block Period (RRBP) field

The RRBP value specifies a single uplink block in which the mobile station shall transmit either a PACKET CONTROL ACKNOWLEDGEMENT message or a PACCH block to the network. If the RRBP field is received as part of an RLC/MAC block containing an RLC/MAC control block containing any message except Packet Paging Request, Packet Access Reject, and Packet Queueing Notification, the mobile station shall transmit a PACKET CONTROL ACKNOWLEDGEMENT message in the uplink radio block specified. If the RRBP field is received as part of an RLC/MAC block containing an RLC/MAC control block containing a Packet Paging Request, Packet Access Reject, or Packet Queueing Notification message, the mobile station shall ignore this RRBP field. The mobile station shall only react on RLC/MAC control blocks containing a valid RRBP field if the mobile station is unambiguously addressed eitherin the downlink RLC/MAC control block header or in the control message itself. If the control message is segmented into more than one downlink RLC/MAC control blocks the mobile station shall react only on RLC/MAC control blocks containing a valid RRBP field if the mobile station is unambiguously addressed in the downlink RLC/MAC control block header.

If the mobile station receives two or more RLC/MAC blocks containing an RLC/MAC control message with different RRBP values such that they specify the same uplink block, the mobile station shall transmit one PACKET CONTROL ACKNOWLEDGEMENT message in the specified uplink radio block.

If the RRBP field is received as part of a RLC/MAC block containing an RLC data block, the mobile station shall transmit a PACCH block in the specified uplink radio block. If the mobile station receives two or more RLC/MAC blocks containing an RLC data block with different RRBP values such they specify the same uplink radio block, the mobile station shall transmit one PACCH block in the specified uplink radio block.

If the mobile station receives an RLC data block and an RLC/MAC control block with different RRBP values such that they specify the same uplink radio block, the mobile station shall transmit an PACKET CONTROL ACKNOWLEDGEMENT message in the specified uplink radio block.

The mobile station shall always transmit the uplink radio block on the same timeslot as the block where the RRBP was received. After receiving an RLC/MAC block containing a valid RRBP field the mobile station need not monitor the USF in the associated downlink RLC/MAC block appearing just before the uplink block it shall transmit.

A polled control message shall always be sent in the uplink block specified by the corresponding valid RRBP field of a downlink RLC/MAC control block, and not in any other uplink block that may be allocated to the mobile station.

Table 7 indicates the number of TDMA frames the mobile station shall wait before transmitting the uplink RLC/MAC block. The delay is relative to the first TDMA frame (N) of the downlink block containing the RRBP value. For definition of TDMA frame numbering, see GSM 05.02.

Table 7: Relative Reserved Block Period (RRBP) field

bit 6 5	
0 0	uplink block with TDMA frame number = (N+13) mod 2715648
0 1	uplink block with TDMA frame number = (N+17 or N+18) mod 2715648
1 0	uplink block with TDMA frame number = (N+21 or N+22) mod 2715648
1 1	uplink block with TDMA frame number = (N+26) mod 2715648

10.4.6 Countdown Value (CV) field

The Countdown Value (CV) field is sent by the mobile station to allow the network to calculate the number of RLC data blocks remaining for the current uplink TBF. The CV value shall be calculated according to the process described in subclause 9.3.1. The CV field is 4 bits in length and is encoded as a binary number with range 0 to 15.

10.4.7 Payload Type field

The Payload Type field shall indicate the type of data contained in remainder of the RLC/MAC block. The encoding of the Payload Type field is shown in table 8.

Table 8: Payload Type field

bit 8 7	Payload Type
0 0	RLC/MAC block contains an RLC data block
0 1	RLC/MAC block contains an RLC/MAC control block that does not include the optional octets of the RLC/MAC control header
10	In the downlink direction, the RLC/MAC block contains an RLC/MAC control block that includes the optional first octet of the RLC/MAC control header. In the uplink direction, this value is reserved.
1 1	Reserved. In this version of the protocol, the mobile station shall ignore all fields of the RLC/MAC block except for the USF field

10.4.8 Final block indicator (FBI) bit

The Final block indicator (FBI) bit indicates that the downlink RLC data block is the last RLC data block of the downlink TBF.

Table 9: Final block indicator bit

bit 1	Final block indicator
0	Current block is not last RLC data block in TBF
1	Current block is last RLC data block in TBF

10.4.9 TLLI Indicator (TI) bit

The TLLI Indicator (TI) bit indicates the presence of an optional TLLI field within the RLC data block.

Table 10: TLLI Indicator (TI) bit

bit 1	TLLI indicator (TI) bit
0	TLLI field is not present
1	TLLI field is present

10.4.9a Address Control (AC) bit

The Address Control (AC) bit is used to indicate the presence of the optional TFI/D octet in the header of downlink RLC/MAC control blocks.

Table 11: Address Control (AC) bit

bit	
1	Address Control (AC) bit
0	TFI/D octet is not present
1	TFI/D octet is present

10.4.9b Final Segment (FS) bit

The Final Segment (FS) bit indicates that the downlink RLC/MAC control block contains the final segment of an RLC/MAC control message.

Table 12: Final Segment (FS) bit

bit	
2	Final Segment (FS) bit
0	Current block does not contain the final segment of an RLC/MAC control message
1	Current block contains the final segment of an RLC/MAC control message

10.4.9c Radio Transaction Identifier (RTI) field

The Radio Transaction Identifier (RTI) field is used to group the downlink RLC/MAC control blocks that make up an RLC/MAC control message and identifies the segmented control message sequence with which the downlink RLC/MAC control block is associated. The RTI field is five bits in length with range 0 to 31.

10.4.9d Direction (D) bit

The Direction (D) bit indicates the direction of the TBF identified by the TFI field in the downlink RLC/MAC control block header.

Table 13: Direction (D) bit

bit	
1	Direction (D) bit
0	TFI field identifies an uplink TBF
1	TFI field identifies a downlink TBF

10.4.10 Temporary Flow Identity (TFI) field

In RLC data blocks, the TFI identifies the Temporary Block Flow (TBF) to which the RLC data block belongs. For the downlink and the uplink TFI the TFI field is 5 bits in length and are encoded as a binary number with range 0 to 31.In downlink RLC/MAC control blocks, the TFI identifies the Temporary Block Flow (TBF) to which the RLC/MAC control message contained in the downlink RLC/MAC control block relates. If present, this field indicates the mobile station to which the control message is addressed, and all other mobile stations shall ignore the control message. If this field is present and the contents of the control message also contain a TFI addressing the mobile station, the mobile station shall ignore the TFI in the control message contents. If this field is not present all mobile stations shall interpret the contents of the control message.

10.4.10a Power Reduction (PR) field

The Power Reduction (PR) field indicates the power level reduction of the current RLC block.

The coding of Power Reduction (PR) field depends on downlink power control mode (mode A and B defined in BTS_PWR_CTRL_MODE bit sent in assignment messages).

For mode A, there is one value of the PR field which indicates that the field shall be ignored by the MS.

If downlink power control is not used, the MS shall ignore the PR field.

Table 14 gives values for mode A.

Table 14: Power Reduction (PR) field for mode A

bit 8 7	Power Reduction
0 0	0 – 2 dB less than BCCH level – P0
0 1	4 – 6 dB less than BCCH level – P0
1 0	8 – 10 dB less than BCCH level – P0
1 1	Not usable

Table 15 gives values for mode B.

Table 15: Power Reduction (PR) field for mode B

bit 8 7	Power Reduction
0 0	0-6 dB less than BCCH level
0 1	8-14 dB less than BCCH level
1 0	16-22 dB less than BCCH level
1 1	24-30 dB less than BCCH level

10.4.11 Extension (E) Bit

The Extension (E) bit is used to indicate the presence of an optional octet in the RLC data block header.

Table 16: Extension (E) bit

bit 1	E bit
0	Extension octet follows immediately
1	No extension octet follows

10.4.12 Block Sequence Number (BSN) field

The Block Sequence Number (BSN) field carries the sequence absolute Block Sequence Number (BSN') modulo 128 of each RLC data block within the TBF. The BSN is 7 bits in length and is encoded as a binary number with range 0 to 127.

10.4.12a Reduced Block Sequence Number (RBSN) bit

The Reduced Block Sequence Number (RBSN) bit carries the sequence number of the downlink RLC/MAC control blocks. The RBSN bit is encoded as a binary number with range 0 to 1.

10.4.13 More (M) bit

The M bit, along with the E bit and the Length Indicator (LI), are used to delimit LLC frameLLC PDUs within a TBF. When the M bit is present it indicates whether or not another LLC PDU follows the current one within the RLC data block. The function of the M and E bits when they occur in the same octet is defined in table 17.

Table 17: M bit and E bit

bit M	bit E	
0	0	Reserved. In this version of the protocol, if received by the mobile station it shall ignore all fields of the RLC/MAC block except for the fields of the MAC header
0	1	no LLC data after the current LLC PDU, no more extension octets
1	0	a new LLC PDU starts after the current LLC PDU and there is another extension octet, which delimits the new LLC PDU
1	1	a new LLC PDU starts after the current LLC PDU and continues until the end of the RLC information field, no more extension octets

10.4.14 Length Indicator (LI) field

The Length Indicator is used to delimit LLC PDUs within the RLC data block. The first Length Indicator shall indicate the number of octets of the RLC data field belonging to the first LLC PDU, the second Length Indicator shall indicate the number of octets of the RLC data field belonging to the second LLC PDU, etc. Only the last segment of any LLC PDU of a TBF (either this segment carries the entire LLC PDU or not) shall be identified with a Length Indicator within the corresponding RLC data block.

A singular case occurs when the end of the LLC PDU would fit within the RLC data block but the addition of the Length Indicator octet (to indicate the LLC PDU boundary) causes the LLC PDU to extend into the next RLC data block. In this case, this additional LI field shall take the value 0 whatever is the length of the last but one LLC PDU segment.

The final RLC data block of a TBF shall have a Length Indicator field corresponding to the final LLC PDU unless this PDU fills the RLC data block precisely without the LI field being added (i.e. the singular case mentioned above never applies in this situation).

The LI field is 6 bits in length and shall be encoded as a binary number with range 1 to 19, 29, 35 or 49, according to the coding scheme in use, i.e. CS-1, CS-2, CS-3 or CS-4 respectively. The value 0 shall indicate that no LLC PDU boundary exists. In this case the M bit shall be set to' 0' and the E bit shall be set to '1' on the transmitting side, while on the receiving side the M bit shall be ignored and the E bit shall be interpreted as having the value '1'. All other values are reserved, and in this version of the protocol, the mobile station shall ignore all fields of the RLC data block except for the USF field.

10.4.15 TLLI field

The TLLI field contains a TLLI encoded as the contents of the TLLI information element defined in GSM 04.08.

10.4.16 RLC data field

The RLC data field contains octets from one or more LLC PDUs. The RLC data field may contain parts of one or two LLC PDUs and all of an arbitrary number of LLC PDUs. The E bit, the M bit, and the Length Indicator delimit the RLC data field into LLC PDUs. If the last LLC PDU of the TBF does not fill the entire RLC data field, an extension octet shall be used to indicate the number of valid RLC data octets and the remainder of the RLC data field shall be filled with filler octets with the value '00101011'. Only the last RLC data block of the TBF may contain filler octets.

10.4.17 Control message contents field

The Control message contents field shall contain exactly one segment from one RLC/MAC control message field (i.e. RLC/MAC control block).

11 Message functional definitions and contents

This clause defines the structure of the RLC/MAC control messages. These are non-standard L3 messages as defined in GSM 04.07. The formats for the messages are valid only for the PDCH. The format for RLC/MAC control messages for use on the CCCH are defined in GSM 04.08.

Each definition given in the present clause includes:

- a brief description of the message direction and use;
- a CSN.1 description of the message information elements and fields (see GSM 04.07). Definition of information elements may immediately follow the definition of the message. If the definition of an information element immediately follows the message definition, the information element name ends with 'struct'. Otherwise the information element name ends with 'IE' and the definition of the information element is defined in clause 12 or in GSM 04.08. The definition of a 'struct' is valid only within the table in which it is defined. No references shall be made to a 'struct' definition from outside of the table in which it is defined or from outside the present document. The definition of an information element is valid throughout clause 11 and clause 12;
- a note specifying, where appropriate, conditions for information elements or fields with presence requirement C or O in the relevant message which together with other conditions specified in GSM 04.60 define when the information elements shall be included or not, what non-presence of such information elements or fields means, and - for IEs with presence requirement C - the static conditions for presence and/or non-presence of the information elements or fields (see GSM 04.07);
- a table follows which contains a definition for each field referenced in the message definition or in an information element struct immediately following the message definition.

Bit fields within RLC/MAC messages shall have the highest numbered bit of the bit field in the highest numbered bit of the lowest number octet. The mapping of an 11 bit field is illustrated in figure 7.

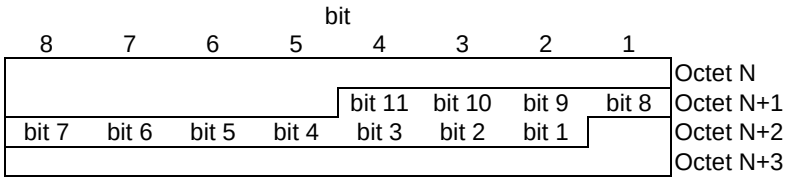

Figure 7: Field mapping within RLC/MAC messages

The length of an RLC/MAC control messages is an integer number of RLC/MAC control blocks. Padding bits are necessary to fill the message up to the desired length. The padding bits may be the 'null' string. Otherwise, the padding bits starts with bit '0', followed by 'spare padding'.

```
< padding bits > ::= { null | 0 < spare padding > ! < Ignore : 1 bit** = < no string > > } ;
```

The padding sequence used for 'spare padding' in the present document, see GSM 04.07, is a repetition of octet '00101011', starting on an octet boundary.

11.1 Handling of erroneous protocol data

This section specifies procedures for the handling of unknown and erroneous protocol data by the receiving entity.

These error-handling procedures are mandatory for the mobile station.

A message is defined to be syntactically incorrect if it violates rules of clauses 11 and 12, or if it contains at least one value defined as "reserved" in clauses 11 and 12. However, if the rules of clause 11 and 12 define a specific interpretation for a "reserved" value, the specified interpretation takes precedence and the considered field remains syntactically correct.

Decoding a received message based on its CSN.1 description yields the complete acceptance or rejection of the message. Error handling allows a message to be partially accepted even when some parts are erroneous.

Error detection mechanisms are introduced to identify which parts of a message to be protected against which kinds of errors.

11.1.1 Message classification

The packet data channel (PDCH) is a shared resource, i.e., all mobile stations assigned resources on a PDCH may receive a message sent by the network. The message type is identified by the MESSAGE_TYPE field contained in each message. The message type is used for classification and determining the message syntax.

Messages sent from the network to the mobile station are classified as either distribution messages or non-distribution messages.

11.1.1.1 Distribution messages

A distribution message is recognised by the most significant bit of the message type being set to bit '1'. The general format of a distribution message sent from the network to the mobile station is:

```
< Distribution message > ::=
    < MESSAGE_TYPE : 1 bit (5) >
    < Distribution contents >
    < padding bits > ;
```

Any mobile stations may receive a distribution message. Depending on the protocol state of the mobile station, a distribution message shall be analysed as specified in clauses 5, 6, 7, 8 and 9 of the present document.

The ‘Distribution contents’ of a distribution message contains Page Mode information and any specific distribution information according to the syntax defined for the message type. The 'padding bits' of a distribution message can be reduced to the null string.

The general format of the ‘Distribution contents’ is

```
< Distribution contents > ::=
    < PAGE_MODE : bit (2) >
    < specific distribution information > ;
```

The encoding of the Page Mode information is defined in clause 12.20.

11.1.1.2 Non-distribution messages

A non-distribution message is recognised by the most significant bit of the message type being set to bit '0'. The general format of a message sent from the network to the mobile station is

```
< Non-distribution message > ::=
    < MESSAGE_TYPE : 0 bit (5) >
    < Distribution contents >
    < Address information > < Non-distribution contents >
    < padding bits > ;
```

Any mobile station may receive a non-distribution message.

The 'Distribution contents' of a non-distribution message contains Page Mode information and any specific distribution information according to the syntax defined for the message type. The general format of the ‘Distribution contents’ is defined in clause 11.1.1.1. Depending on the protocol state of the mobile station, the ‘Distribution contents’ of a non-distribution message shall be analysed as specified in clause 5 and 7 of the present document.

The 'Address information' contained in a non-distribution message shall be analysed by a mobile station receiving the message. The 'Non-distribution contents' following the address information shall be ignored by any mobile station not identified by the address information. The allowed addressing options and the specific syntax of the 'Non-distribution contents' depend on the message type. The 'padding bits' of a non-distribution message can be reduced to the null string.

11.1.1.2.1 Format of the address information

The general format of the 'Address information' in a non-distribution message is

```
< Address information > ::=
    0   < Global TFI IE > |                          -- see clause 12.10
    1 0 < TLLI > |                                   -- see clause 12.16
    1 1 0   < TQI > |                                -- see clause 12.17
    1 1 1   < Packet Request Reference IE > ;        -- see clause 12.11
```

The description of a certain message type may specify a restricted set of addressing options being syntactically correct in the message. A message received with a disallowed addressing option shall be regarded as syntactically incorrect.

11.1.2 Error detection mechanism

The symbol '!' indicates an error branch. It acts as a separator (similar to the '|' choice symbol) where the choice on the right of the '!' are to be considered as an 'error' branch. The symbol '!' allows partial analysis of data in a received message, with some parts of the message to be ignored due to it being syntactically incorrect.

The description on the left of '!' defines the set of syntactically correct data and shall be recognised correctly. Otherwise, the data associated shall be rejected and the description within the error branch shall be used.

The description within the error branch, on the right of '!', shall accept any syntactically incorrect data. Therefore, according to the error label the relevant error handling procedure shall be implemented.

11.1.3 Error labels

There are different categories of error labels introduced in clauses 11 and 12 of the present document.

11.1.3.1 Generic error labels

Generic error labels are defined for syntactical errors 'Unknown message type', 'Distribution part error', 'Address information part error' and 'Non-distribution part error'.

The general format of a distribution message, including these error labels, is

```
< Distribution message > ::=
    < MESSAGE_TYPE : 1 bit (5) >
    {   < Distribution contents >
        < padding bits >
         ! < Distribution part error : bit (*) = < no string > > }
     ! < Unknown message type : bit (6) = < no string > < Default downlink message content > > ;
```

The general format of a non-distribution message, including these error labels, is

```
< Non-distribution message > ::=
    < MESSAGE_TYPE : 0 bit (5) >
    {   < Distribution contents >
        {   < Address information >
            {   < Non-distribution contents >
                < padding bits >
                ! < Non-distribution part error : bit (*) = < no string > > }
            ! < Address information part error : bit (*) = < no string > > }
        ! < Distribution part error : bit (*) = < no string > > }
    ! < Unknown message type : bit (6) = < no string > < Default downlink message content > > ;
```

These error labels allow ignoring a part of the message that is syntactically incorrect. Once an error is detected, the error branch is called. Except for the ‘Unknown message type’, the error branch is followed by an unspecified bit string that expands to the end of the message. The corresponding data is ignored. In case of an ‘Unknown message type’, further treatment of the message is defined in clause 11.1.4.1.

11.1.3.2 'Ignore' error label

An 'Ignore' error label is used to ignore part of the message. The generic description is

```
< content > ! < Ignore : bit (*) = < no string > >                    -- Ignore by indefinite length
```

Or

```
< content of fixed length n > ! < Ignore : bit (n) = < no string > >    -- Ignore by definite length
```

An 'Ignore' error label shall be applied by the receiver of a downlink RLC/MAC control message when specified in the message description in clauses 11 and 12 of the present document. This error label allows ignoring a part of the message that is syntactically incorrect. Once the error is detected, the error branch 'Ignore' is called followed by an unspecified bit string.

When this error label is used with an indefinite length (bit (*) = < no string >), the unspecified bit string expands to the end of the message and the corresponding data is ignored.

NOTE: If this error label is used with the indefinite length within a structure or delimited description (i.e. within { } brackets), any description following the structure or delimited description must allow truncation, in order to be consistent with the CSN.1 description of the message.

When this error label is used with a definite length (bit (n) = < no string >), the unspecified bit string contains a defined number of bits. The corresponding data is ignored.

11.1.3.3 'Message escape' error label

The 'Message escape' error label is used to provide an escape for, e.g., a future modification of the message syntax. The generic description is

```
0 < Content > ! < Message escape : 1 bit (*) = < no string > >
```

An 'Message escape' error label shall be applied by the receiver of a downlink RLC/MAC control message when specified in the message description in clauses 11 and 12 of the present document. The description on the left of the error branch needs to be correctly recognised. Otherwise, the error branch 'Message escape' is called and the remaining part of the message is ignored.

NOTE: Any description following a structure or delimited description (i.e. within { } brackets) including this error label must allow truncation. Otherwise, it is not consistent with the CSN.1 description of the message.

11.1.4 Error detection and order of precedence

A mobile station shall detect and process errors in the order in which they are defined in this clause (11.1.4) of the present document. (E.g., a message, which is not compatible with the current protocol state AND is syntactically incorrect, shall be treated as if it is not compatible with the current protocol state.)

At certain error events defined in this clause (11.1.4), the PACKET TBF STATUS message shall be sent by the mobile station. In case of multiple error events, and, due to restrictions defined in clauses 5, 6, 7, 8 and 9, the mobile station is not able to send a first status message until the occurrence of a subsequent event generating a second status message, the mobile station shall suppress the sending of the second and additional status messages until the first status message has been sent to the network.

For mobile stations implemented according to this version of the protocol, the sending of the PACKET TBF STATUS message is optional. This option is implementation dependent. A mobile station implementing this option shall send the PACKET TBF STATUS message as specified in this subclause.

11.1.4.1 Unknown message type

If a mobile station receives a message with message type either not defined or not implemented (generic error label: 'Unknown message type'), the content of the bits representing the message type shall be ignored.

The remaining part of the message shall be analysed according to the syntax defined as the ‘Default downlink message content’ in clause 11.2.0.1. The ‘Default downlink message content’ contains the Page Mode information. Depending on the protocol state of the mobile station, the Page Mode information shall be analysed as specified in clause 5 of the present document.

11.1.4.2 Message not compatible with current protocol state

When a non-distribution message is received, which is not expected by the addressed receiver in its current protocol state, the mobile station shall follow the procedures that are described in clauses 5, 6, 7, 8 and 9 of the present document.

If no such reaction is specified, the mobile station shall ignore the message. If in packet transfer mode, the mobile station, which is identified by the address information shall return a status message (PACKET MOBILE TBF STATUS message) with TBF_CAUSE #4, "Message not compatible with current protocol state".

Unexpected distribution messages are ignored.

11.1.4.3 Syntactically incorrect message

When a message containing a syntactically incorrect data is received, depending on the error detection mechanisms that may be defined in the CSN.1 description of the message, the message can be rejected or partially accepted.

Exceptions to the rules in this subclause are given in subclause 11.1.4.5.

NOTE: The order, in which the error labels mentioned in this clause are detected and processed, depends on the nesting of error labels defined by the description of each message type in clauses 11.2 and 12. E.g., a message, which contains syntactically incorrect data in both the addressing information AND the non-distribution contents, is typically received with the error label 'Address information part error'.

11.1.4.3.1 Messages with error label: 'Distribution part error'

For syntactically incorrect messages received with generic error label: 'Distribution part error', data corresponding to the description following the error label shall be recognised as erroneous data and be ignored.

11.1.4.3.2 Messages with error label: 'Address information part error'

For syntactically incorrect messages received with generic error label: 'Address information part error', data corresponding to the description following the error label shall be recognised as erroneous data and be ignored. The distribution contents preceding the error label may be analysed and treated as described in clause 5 and 7 of the present document.

11.1.4.3.3 Messages with error label: 'Non-distribution part error'

For syntactically incorrect messages received with generic error label: 'Non-distribution part error', data corresponding to the description following the error label shall be recognised as erroneous data and be ignored.

The distribution contents preceding the error label may be analysed and treated as described in clause 5 and 7 of the present document.

The address information preceding the error label shall be analysed. In packet transfer mode, the mobile station identified by the address information shall return a PACKET MOBILE TBF STATUS message with TBF_CAUSE #2 "Syntactically incorrect message, non-distribution part error".

11.1.4.3.4 Messages with error label: 'Message escape'

For syntactically incorrect messages with error label: 'Message escape', data corresponding to the description following the error label shall be recognised as erroneously received mandatory data and be rejected.

The distribution contents preceding the error label may be analysed and treated as described in clause 5 and 7 of the present document.

If the address information proceeds the error label and it is received correctly, it shall be analysed. In packet transfer mode, the mobile station identified by the address information shall return a PACKET MOBILE TBF STATUS message with TBF_CAUSE #3 "Syntactically incorrect message, message escape".

11.1.4.3.5 Messages with error label: 'Ignore'

For syntactically incorrect messages with error label: 'Ignore', data corresponding to the description following the error label shall be recognised as unnecessary data. If a syntactically incorrect message with the 'Ignore' error label is received, depending on the length of the unspecified bit string associated with the error label (clause 11.1.2.1), the corresponding data shall be ignored.

11.1.4.4 Syntactic error in truncated concatenation

Truncated concatenation is sequences of components encapsulated by the { } brackets followed by the symbol '//'. The concatenation is any of the concatenations starting with null and up to any number of components.

```
{ < a >  < b >  < c > } //
```

The above set is equivalent to

```
{ < a >  < b >  < c > } or
{ < a >  < b > }     or
{ < a > }    or
null
```

Any syntactically incorrect component shall truncate the sequence. The correctly received components are accepted and the truncated components are ignored.

NOTE: If the 'padding bits' at the end of a message are included within the concatenation, truncation requires the resulting concatenation to fit exactly with the received message length. Otherwise, it is a syntactical error, which may cause rejection of the complete message or part thereof.

11.1.4.5 Exceptions

Void.

11.2 RLC/MAC control messages

Table 18 summarises the RLC/MAC control messages. For each control message, the message type shall be a fixed number of bits from the beginning of the message.

Table 18: RLC/MAC control messages

Uplink TBF establishment messages:	**Reference**
Packet Access Reject	11.2.1
Packet Channel Request	11.2.5
Packet Queuing Notification	11.2.15
Packet Resource Request	11.2.16
Packet Uplink Assignment	11.2.29
Downlink TBF establishment messages:	**Reference**
Packet Downlink Assignment	11.2.7
TBF release messages:	**Reference**
Packet TBF Release	11.2.26
Paging messages:	**Reference**
Packet Paging Request	11.2.10
RLC messages:	**Reference**
Packet Downlink Ack/Nack	11.2.6
Packet Uplink Ack/Nack	11.2.28
System information messages:	**Reference**
Packet System Information Type 1	11.2.18
Packet System Information Type 2	11.2.19
Packet System Information Type 3	11.2.20
Packet System Information Type 3 bis	11.2.21
Packet System Information Type 4	11.2.22
Packet System Information Type 5	11.2.23
Packet System Information Type 13	11.2.25
Miscellaneous messages:	**Reference**
Packet Control Acknowledgement	11.2.2
Packet Cell Change Failure	11.2.3
Packet Cell Change Order	11.2.4
Packet Downlink Dummy Control Block	11.2.8
Packet Uplink Dummy Control Block	11.2.8b
Packet Measurement Report	11.2.9
Packet Measurement Order	11.2.9b
Packet Mobile TBF Status	11.2.9c
Packet PDCH Release	11.2.11
Packet Polling Request	11.2.12
Packet Power Control/Timing Advance	11.2.13
Packet PRACH Parameters	11.2.14
Packet PSI Status	11.2.17
Spare	11.2.24
Spare	11.2.27
Spare	11.2.30
Packet Timeslot Reconfigure	11.2.31

11.2.0 Message format

All RLC/MAC control messages, with the exception of the PACKET CONTROL ACKNOWLEDGEMENT message in access burst format (11-bit and 8-bit contents) and the PACKET CHANNEL REQUEST message, follow the same non-standard format (see GSM 04.07).

11.2.0.1 Downlink RLC/MAC messages

Downlink RLC/MAC control messages are received in RLC/MAC control block format. The different types of messages are distinguished by the MESSAGE_TYPE field.

```
< Downlink RLC/MAC control message > ::=
    < MESSAGE_TYPE : bit (6) == 1 00001 >      < Packet Access Reject message content > |
    < MESSAGE_TYPE : bit (6) == 0 00001 >      < Packet Cell Change Order message content > |
    < MESSAGE_TYPE : bit (6) == 0 00010 >      < Packet Downlink Assignment message content > |
    < MESSAGE_TYPE : bit (6) == 0 00011 >      < Packet Measurement Order message content > |
    < MESSAGE_TYPE : bit (6) == 1 00010 >      < Packet Paging Request message content > |
    < MESSAGE_TYPE : bit (6) == 1 00011 >      < Packet PDCH Release message content > |
    < MESSAGE_TYPE : bit (6) == 0 00100 >      < Packet Polling Request message content > |
    < MESSAGE_TYPE : bit (6) == 0 00101 >
                                   < Packet Power Control/Timing Advance message content > |
    < MESSAGE_TYPE : bit (6) == 1 00100 >      < Packet PRACH Parameters message content > |
    < MESSAGE_TYPE : bit (6) == 0 00110 >      < Packet Queueing Notification message content > |
    < MESSAGE_TYPE : bit (6) == 0 00111 >      < Packet Timeslot Reconfigure message content > |
    < MESSAGE_TYPE : bit (6) == 0 01000 >      < Packet TBF Release message content > |
    < MESSAGE_TYPE : bit (6) == 0 01001 >      < Packet Uplink Ack/Nack message content > |
    < MESSAGE_TYPE : bit (6) == 0 01010 >      < Packet Uplink Assignment message content > |
    < MESSAGE_TYPE : bit (6) == 1 00101 >
                                   < Packet Downlink Dummy Control Block message content > |
    < MESSAGE_TYPE : bit (6) == 1 10001 >      < PSI1 message content > |
    < MESSAGE_TYPE : bit (6) == 1 10010 >      < PSI2 message content > |
    < MESSAGE_TYPE : bit (6) == 1 10011 >      < PSI3 message content > |
    < MESSAGE_TYPE : bit (6) == 1 10100 >      < PSI3 bis message content > |
    < MESSAGE_TYPE : bit (6) == 1 10101 >      < PSI4 message content > |
    < MESSAGE_TYPE : bit (6) == 1 10110 >      < PSI5 message content > |
    < MESSAGE_TYPE : bit (6) == 1 10111 >      < PSI13 message content >
    ! < Unknown message type : bit (6) = < no string > < Default downlink message content > > ;
```

The ‘Default downlink message contents’ consists of the Page Mode information and an unspecified bit string that expands to the end of the message.

```
< Default downlink message content > ::=
    < PAGE_MODE : bit (2) >
    bit (*) = < no string > ;
```

The encoding of the Page Mode information is defined in clause 12.20.

11.2.0.2 Uplink RLC/MAC messages

Uplink RLC/MAC control messages, except those using the access burst formats, are received in the RLC/MAC control block format. The different types of messages are distinguished by the MESSAGE_TYPE field.

```
< Uplink RLC/MAC control message > ::=
    < MESSAGE_TYPE : bit (6) == 000000 >       < Packet Cell Change Failure message content > |
    < MESSAGE_TYPE : bit (6) == 000001 >
                                   < Packet Control Acknowledgement message content > |
    < MESSAGE_TYPE : bit (6) == 000010 >       < Packet Downlink Ack/Nack message content > |
    < MESSAGE_TYPE : bit (6) == 000011 >
                                   < Packet Uplink Dummy Control Block message content > |
    < MESSAGE_TYPE : bit (6) == 000100 >       < Packet Measurement Report message content > |
    < MESSAGE_TYPE : bit (6) == 000101 >       < Packet Resource Request message content > |
    < MESSAGE_TYPE : bit (6) == 000110 >       < Packet Mobile TBF Status message content > |
    < MESSAGE_TYPE : bit (6) == 000111 >       < Packet PSI Status message content > ;
```

Messages using the access burst formats (11-bit and 8-bit formats) are defined in clauses 11.2.2 and 11.2.5.

11.2.1 Packet Access Reject

This message is sent on the PCCCH or PACCH by the network to the mobile station to indicate that the network has rejected the MSs access request. This message may contain fields addressing more than one mobile station.

Message type: PACKET ACCESS REJECT

Direction: network to mobile station

Classification: distribution message

Table 19: PACKET ACCESS REJECT information elements

```
< Packet Access Reject message content > ::=
    < PAGE_MODE : bit (2) >
    < Reject : < Reject struct > >
    { { 1 < Additional Reject: < Reject struct > > } ** 0
     < padding bits > } //       -- truncation at end of message allowed, bits '0' assumed
     ! < Distribution part error : bit (*) = < no string > > ;

< Reject struct > ::=
    { 0 < TLLI : bit (32) >
     | 1 { 0 < Packet Request Reference : < Packet Request Reference IE > >
          | 1 < Global TFI : < Global TFI IE > > } }
    { 0 | 1  < WAIT_INDICATION : bit (8) >
             < WAIT _INDICATION_SIZE : bit (1) > }
     ! < Ignore : bit (*) = <no string> > ;
```

Table 20: PACKET ACCESS REJECT information element details

PAGE_MODE (2 bit field)
This field is defined in clause 12.20.

Reject struct
The mobile station shall only accept the first Reject struct addressed to it and ignore all other Reject structs.

Packet Request Reference
This information element shall be included if the PACKET ACCESS REJECT message is sent in response to a PACKET CHANNEL REQUEST message. This information element is defined in subclause 12.11.

TLLI (32 bit field)
This information field shall be included if the PACKET ACCESS REJECT message is sent in response to a PACKET RESOURCE REQUEST message or a Channel Request Description IE contained in a PACKET DOWNLINK ACK/NACK message. This information field is defined in subclause 12.16.

Global TFI
This information element contains the TFI of the mobile station's downlink TBF or uplink TBF. This field is defined in clause 12.10.

WAIT_INDICATION (8 bit field)
The Wait Indication field indicates the time the mobile station shall wait before attempting another channel request. If this field is present the cause value is 'Wait'. If this field is not present, the cause value is 'Read System Information'. This field is coded as the binary representation of the T3172 timeout value in units of 20 milliseconds or in units of seconds. The units are indicated in the WAIT_INDICATION_SIZE field.
Range 0 to 255.

WAIT_INDICATION_SIZE (1 bit field)
This field indicates the units of the WAIT_INDICATION field.

0 the WAIT_INDICATION field is coded in units of seconds
1 the WAIT_INDICATION field is coded in units of 20 milliseconds

11.2.2 Packet Control Acknowledgement

This message is sent on the PACCH from the mobile station to the network. The message is formatted either as an RLC/MAC control block or as 4 identical access bursts. If sent as response to a Packet Polling Request message this latter message shall specify the format of the Packet Control Acknowledgement message. Otherwise the System Information parameter CONTROL_ACK_TYPE indicates which format the mobile station shall use. The order of bit transmission is defined in GSM 04.04.

The RLC/MAC control block format is shown in table 21 and table 22.

The access burst format is 11 bits or 8 bits long and is coded as shown in table 21. If the System Information parameter ACCESS_BURST_TYPE indicates 11-bit access, the mobile station shall transmit the 11-bit format. If the System Information parameter ACCESS_BURST_TYPE indicates 8-bit access, the mobile station shall transmit the 8-bit format. The mobile station shall transmit the access burst four times, one time in each TDMA frame of the uplink radio block.

Message type: PACKET CONTROL ACKNOWLEDGEMENT

Direction: mobile station to network

Table 21: PACKET CONTROL ACKNOWLEDGEMENT

```
< Packet Control Acknowledgement message content > ::=          -- RLC/MAC control block format
    < TLLI : bit (32) >
    < CTRL_ACK : bit (2) >
    < padding bits > ;

< Packet Control Acknowledgement 11 bit message > ::=           -- 11-bit access burst format
    < MESSAGE_TYPE : bit (9) == 1111 1100 1 >
    < CTRL_ACK : bit (2) > ;

< Packet Control Acknowledgement 8 bit message > ::=            -- 8-bit access burst format
    < MESSAGE_TYPE : bit (6) == 0111 11 >
    < CTRL_ACK : bit (2) > ;
```

Table 22: PACKET CONTROL ACKNOWLEDGEMENT

TLLI (32 bit field)
This field contains the TLLI of the mobile station. This field is encoded as defined in clause 12.16.

CTRL_ACK (2 bit field)
This field contains acknowledgement information for the group of RLC/MAC control blocks that make up an RLC/MAC control message. The mobile station shall set the CTRL_ACK field to indicate which segments of an RLC/MAC control message have been received by the time of transmission of the PACKET CONTROL ACKNOWLEDGEMENT message.

If the PACKET CONTROL ACKNOWLEDGEMENT message is being transmitted in response to a valid RRBP field received as part of an RLC/MAC block with Payload Type equal to '10', the CTRL_ACK field shall be set according to the following table:

bit 2 1	
0 0	reserved - this value shall not be sent. If received it shall be interpreted as bit value '0 1'.
0 1	the MS received an RLC/MAC control block addressed to itself and with RBSN = 1, and did not receive an RLC/MAC control block with the same RTI value and RBSN = 0.
1 0	the MS received an RLC/MAC control block addressed to itself and with RBSN = 0, and did not receive an RLC/MAC control block with the same RTI value and RBSN = 1. This value is sent irrespective of the value of the FS bit.
1 1	the MS received two RLC/MAC blocks with the same RTI value, one with RBSN = 0 and the other with RBSN = 1.

If the PACKET CONTROL ACKNOWLEDGEMENT message is being transmitted in response to a valid RRBP field received as part of an RLC/MAC block with Payload Type not equal to '10', the CTRL_ACK field shall be set to the

value '11'.

If the PACKET CONTROL ACKNOWLEDGEMENT message is being transmitted in response to a polling request in an IMMEDIATE ASSIGNMENT message received on CCCH, the CTRL_ACK field shall be set to the value '11'.

If the mobile station receives an RLC/MAC block with Payload Type equal to '10' and RLC/MAC block with Payload Type not equal to '10' with different RRBP values such that they specify the same uplink block, the mobile station shall set the CTRL_ACK field according to the group of RLC/MAC control blocks that the RLC/MAC block with Payload Type equal to '10' belongs.

11.2.3 Packet Cell Change Failure

This message is sent on the PACCH from the mobile station to the network to indicate that a commanded cell change order has failed.

Message type: PACKET CELL CHANGE FAILURE

Direction: mobile station to network

Table 23: PACKET CELL CHANGE FAILURE message content

< Packet Cell Change Failure message content > ::=
< **TLLI** : bit (32) >
< **ARFCN** : bit (10) >
< **BSIC** : bit (6) >
< **CAUSE** : bit (4) >
< padding bits > ;

Table 24: PACKET CELL CHANGE FAILURE information element details

TLLI (32 bit field)
This field is defined in clause 12.16.

ARFCN (10 bit field)
This field contains the BCH frequency of the new cell on which the failure occurred. This field is encoded as the ARFCN defined in GSM 04.08.
Range 0 to 1023

BSIC (6 bit field)
This field contains the BSIC of the BCH frequency of the new cell on which the failure occurred. This field is encoded as the BSIC value defined in GSM 04.08.
Range 0 to 63

CAUSE (8 bit field)
This field indicates the cause of the cell change order failure on the target cell.

bit 4 3 2 1	
0 0 0 0	Frequency not implemented
0 0 0 1	No response on target cell
0 0 1 0	Immediate Assign Reject or Packet Access Reject on target cell
0 0 1 1	On going CS connection
0 1 0 0	Anonymous Access
0 1 0 1	MS in GMM Standby state
0 1 1 0	Forced to the Standby state
All others	Reserved for future use

11.2.4 Packet Cell Change Order

This message is sent on the PCCCH or PACCH by the network to the mobile station to command the mobile station to leave the current cell and change to a new cell.

Message type: PACKET CELL CHANGE ORDER

Direction: network to mobile station

Classification: non-distribution message

Table 25: PACKET CELL CHANGE ORDER message content

```
< Packet Cell Change Order message content > ::=
    < PAGE_MODE : bit (2) >
    {   { 0 < Global TFI : < Global TFI IE > >
         | 10    < TLLI : bit (32) > }
        { 0      -- Message escape
            {    < IMMEDIATE_REL : bit >
                 < ARFCN : bit (10) >
                 < BSIC : bit (6) >
                 < NC Measurement Parameters : < NC Measurement Parameters struct > >
                 < padding bits >
                 ! < Non-distribution part error : bit (*) = < no string > > }
            ! < Message escape : 1 bit (*) = <no string> > }
        ! < Address information part error : bit (*) = < no string > > }
    ! < Distribution part error : bit (*) = < no string > > ;

< NC Measurement Parameters struct > ::=
    < NETWORK_CONTROL_ORDER : bit (2) >
    { 0 | 1 < NC_NON_DRX_PERIOD : bit (3) >
            < NC_REPORTING_PERIOD_I : bit (3) >
            < NC_REPORTING_PERIOD_T : bit (3) > }
    { 0 | 1 < NC_FREQUENCY_LIST : NC Frequency list struct > } ;

< NC Frequency list struct > ::=
    { 0 | 1   < NR_OF_REMOVED_FREQ : bit (5) >
            { < REMOVED_FREQ_INDEX : bit (6) > } * (1 + val(NR_OF_REMOVED_FREQ)) }
    { 1 < List of added Frequency : < Add Frequency list struct > >} ** 0;

< Add Frequency list struct > ::=
    < START_FREQUENCY : bit (10) >
    < BSIC : bit (6) >
    { 0 | 1 < Cell selection params : < Cell Selection struct > > }
            < NR_OF_FREQUENCIES : bit (5) >
            < FREQ_DIFF_LENGTH : bit (3) >
            { < FREQUENCY_DIFF : bit (val(FREQ_DIFF_LENGTH)) >
            < BSIC : bit (6) >
            { 0 | 1  < Cell selection params :
                        < Cell Selection struct > > } } * (val(NR_OF_FREQUENCIES));

< Cell Selection struct > ::=
    < CELL_BAR_ACCESS_2 : bit (1) >
    < EXC_ACC : bit >
    < SAME_RA_AS_SERVING_CELL : bit (1) >
    { 0 | 1  < GPRS_RXLEV_ACCESS_MIN : bit (6) >
            < GPRS_MS_TXPWR_MAX_CCH : bit (5) > }
    { 0 | 1 < GPRS_TEMPORARY_OFFSET : bit (3) >
            < GPRS_PENALTY_TIME : bit (5) > }
    { 0 | 1  < GPRS_RESELECT_OFFSET : bit (5) > }
    { 0 | 1  < HCS params : < HCS struct > > }
    { 0 | 1 < SI13_PBCCH_LOCATION : < SI13_PBCCH_LOCATION struct > > } ;

< SI13_PBCCH_LOCATION struct > ::=
    { 0 < SI13_LOCATION : bit (1) >
     | 1 < PBCCH_LOCATION : bit (2) >
        < PSI1_REPEAT_PERIOD : bit (4) > } ;
```

```
< HCS struct > ::=
    < PRIORITY_CLASS : bit (3) >
    < HCS_THR : bit (5) > ;
```

Table 26: PACKET CELL CHANGE ORDER information element details

PAGE_MODE (2 bit field)
This field is defined in clause 12.20.

Global TFI
This information element contains the TFI of the mobile station's downlink TBF or uplink TBF. This field is defined in clause 12.10.

TLLI (32 bit field)
This field is defined in clause 12.16.

IMMEDIATE_REL (bit)
This field indicates whether the MS shall immediately abort any operation in the old cell and move to the target cell (see subclause 8.4), or it shall not immediately abort operation in the old cell and follow the cell reselection procedure defined in subclause 5.5.1.1. This field is coded according to the following table:

0 No immediate abort of operation in the old cell is required
1 Immediate abort of operation in the old cell is required.

ARFCN (10 bit field)
This field contains the BCCH frequency of the new cell. This field is encoded as the ARFCN defined in GSM 04.08.
Range 0 to 1023

BSIC (6 bit field)
This field contains the BSIC of the new cell. This field is encoded as the BSIC value defined in GSM 04.08.
Range 0 to 63

The **NC_Measurement_Parameters struct** contains the NETWORK_CONTROL_ORDER and the optional parameters NC_NON_DRX_PERIOD, NC_REPORTING_PERIOD_I, NC_REPORTING_PERIOD_T and the NC_FREQUENCY LIST. These parameters shall apply in the target cell (see subclause 5.6.1)

NETWORK_CONTROL_ORDER (2 bit field)
The NETWORK_CONTROL_ORDER field is coded according to the following table (for definition of NCx see GSM 05.08);

bit 2 1	
0 0	NC0
0 1	NC1
1 0	NC2
1 1	RESET

NC_NON_DRX_PERIOD (3 bit field)
NC_REPORTING_PERIOD_I (3 bit field)
NC_REPORTING_PERIOD_T (3 bit field)
For detailed element definitions see the PSI5 message.

NC_FREQUENCY_LIST
For detailed element definitions see the Packet Measurement Order message.

11.2.5 Packet Channel Request

This message is sent in random mode on the PRACH. It does not follow the basic format. The possible formats are presented directly below, without reference to information fields. The order of bit transmission is defined in GSM 04.04.

The message is 11 bits or 8 bits long. If the System Information parameter ACCESS_BURST_TYPE indicates 11-bit access, the mobile station shall transmit the 11-bit format. If the System Information parameter ACCESS_BURST_TYPE indicates 8-bit access, the mobile station shall transmit the 8-bit format.

The 11-bit format is coded as shown in table 27.

The 8-bit format is coded as shown in table 28.

Table 27: PACKET CHANNEL REQUEST 11 bit message content

< Packet channel request 11 bit message content > ::=		
| < **One Phase Access Request** :	0	< **MultislotClass** : bit (5) >
		< **Priority** : bit (2) >
		< **RandomBits** : bit (3) > >
| < **Short Access Request** :	100	< **NoOfBlocks** : bit (3) >
		< **Priority** : bit (2) >
		< **RandomBits** : bit (3) > >
| < **Two Phase Access Request** :	110000	< **Priority** : bit (2) >
		< **RandomBits** : bit (3) > >
| < **Page Response** :	110001	< **RandomBits** : bit (5) > >
| < **Cell Update** :	110010	< **RandomBits** : bit (5) > >
| < **MM Procedure** :	110011	< **RandomBits** : bit (5) > >
| < **Single Block Without TBF Establishment** :	110100	< **RandomBits** : bit (5) > > ;

Table 28: PACKET CHANNEL REQUEST 8 bit message content

< Packet channel request 8 bit message content > ::=		
< **One Phase Access Request** :	1	< **MultislotClass** : bit (5) >
		< **RandomBits** : bit (2) > >
| < **Short Access Request** :	00	< **NoOfBlocks** bit (3) >
		< **RandomBits** : bit (3) > >
| < **Two Phase Access Request** :	01000	< **RandomBits** : bit (3) > >
| < **Page Response** :	01001	< **RandomBits** : bit (3) > >
| < **Cell Update** :	01010	< **RandomBits** : bit (3) > >
| < **MM Procedure** :	01011	< **RandomBits** : bit (3) > >
| < **Single Block Without TBF Establishment** :	01100	< **RandomBits** : bit (3) > > ;

Table 29: PACKET CHANNEL REQUEST details

MultislotClass (5 bit field)
This information field indicates the multislot class of the ME. The coding is defined inthe following table. The semantics of this field is defined in GSM 05.02, Annex B.

bit 5 4 3 2 1	
0 0 0 0 0	multislot class 1
0 0 0 0 1	multislot class 2
: :	: :
1 1 1 0 0	multislot class 29
other	reserved values

Priority (2 bit field)
This information field indicates the requested Radio Priority. This field is coded as shown inthe following table. The 8 bit format has a default Radio Priority of 4.bit

bit 2 1	
0 0	Radio Priority 1 (Highest priority)

0 1 Radio Priority 2
1 0 Radio Priority 3
1 1 Radio Priority 4 (Lower priority)

NumberOfBlocks (3 bit field)
This information field indicates the number of blocks requested during a mobile originated Temporary Block Flow. This field is is coded as shown in the following table:

bit 3 2 1	
0 0 0	1 RLC data block
0 0 1	2 RLC data blocks
. . .	
1 1 1	8 RLC data blocks

RandomBits (2 bit field or 3 bit field or 5 bit field)
This is an unformatted field.

11.2.6 Packet Downlink Ack/Nack

This message is sent on the PACCH from the mobile station to the network to indicate the status of downlink RLC data blocks received and to report the channel quality of the downlink. The mobile station may optionally initiate an uplink TBF.

Message type: PACKET DOWNLINK ACK/NACK

Direction: mobile station to network

Table 30: PACKET DOWNLINK ACK/NACK information elements

```
< Packet Downlink Ack/Nack message content > ::=
    < DOWNLINK_TFI : bit (5) >
    < Ack/Nack Description : < Ack/Nack Description IE > >
    { 0 | 1 < Channel Request Description : < Channel Request Description IE > > }
    < Channel Quality Report : < Channel Quality Report struct > >
    < padding bits > ;

< Channel Quality Report struct > ::=
    < C_VALUE : bit (6) >
    < RXQUAL : bit (3) >
    < SIGN_VAR : bit (6) >
    { 0 | 1 < I_LEVEL_TN0 : bit (4) > }
    { 0 | 1 < I_LEVEL_TN1 : bit (4) > }
    { 0 | 1 < I_LEVEL_TN2 : bit (4) > }
    { 0 | 1 < I_LEVEL_TN3 : bit (4) > }
    { 0 | 1 < I_LEVEL_TN4 : bit (4) > }
    { 0 | 1 < I_LEVEL_TN5 : bit (4) > }
    { 0 | 1 < I_LEVEL_TN6 : bit (4) > }
    { 0 | 1 < I_LEVEL_TN7 : bit (4) > } ;
```

Table 31: PACKET DOWNLINK ACK/NACK information element details

DOWNLINK_TFI (5 bit field)
This field contains the TFI of the mobile station's downlink TBF. This field is defined in clause 12.15.

Ack/Nack Description
This information element is defined in clause 12.3.

Channel Request Description
This information element is defined in clause 12.7.

C_VALUE (6 bit field)
This field is encoded as the binary representation of the C value as specified in GSM 05.08.
Range 0 to 63

RXQUAL (3 bit field)
This field contains the RXQUAL parameter field calculated by the mobile station (see GSM 05.08). This field is encoded as defined in GSM 04.08.
Range 0 to 7

SIGN_VAR (6 bit field)
This field contains the signal variance parameter SIGN_VAR calculated by the mobile station (see GSM 05.08).

bit 6 5 4 3 2 1	
0 0 0 0 0 0	0dB^2 to 0.25 dB^2
0 0 0 0 0 1	>0.25 dB^2 to 0.50 dB^2
0 0 0 0 1 0	>0.50 dB^2 to 0.75 dB^2
: : :	: :
1 1 1 1 1 0	>15.50 dB^2 to 15.75 dB^2
1 1 1 1 1 1	>15.75 dB^2

I_LEVEL_TN0 (4 bit field)
I_LEVEL_TN1 (4 bit field)
I_LEVEL_TN2 (4 bit field)
I_LEVEL_TN3 (4 bit field)
I_LEVEL_TN4 (4 bit field)
I_LEVEL_TN5 (4 bit field)
I_LEVEL_TN6 (4 bit field)
I_LEVEL_TN7 (4 bit field)
These fields contain the I_LEVEL value measured on timeslots 0 through 7, respectively. The I_LEVEL is defined in GSM 05.08 and the coding of I_LEVEL is as follows:

bit 4 3 2 1	
0 0 0 0	I_LEVEL_0
0 0 0 1	I_LEVEL_1
. . .	
1 1 1 0	I_LEVEL_14
1 1 1 1	I_LEVEL15

11.2.7 Packet Downlink Assignment

This message is sent on the PCCCH or PACCH by the network to the mobile station to assign downlink resources to the mobile station.

For a mobile station assigned to operate in the fixed allocation MAC mode, the network may assign regularly repeating intervals during which the mobile station shall measure neighbour cell power levels. A mobile allocation or reference frequency list received as part of this assignment message shall be valid until a new assignment is received or each TBF of the MS are terminated.

Message type: PACKET DOWNLINK ASSIGNMENT

Direction: network to mobile station

Classification: non-distribution message

Table 32: PACKET DOWNLINK ASSIGNMENT information elements

```
< Packet Downlink Assignment message content > ::=
    < PAGE_MODE : bit (2) >
    { 0 | 1 <PERSISTENCE_LEVEL : bit (4) > * 4 }
    {   { 0 < Global TFI : < Global TFI IE > >
         | 10   < TLLI : bit (32) > }
        { 0     -- Message escape
            {   < MAC_MODE : bit (2) >
                < RLC_MODE : bit (1) >
                < CONTROL_ACK : bit (1) >
                < TIMESLOT_ALLOCATION : bit (8) >
                < Packet Timing Advance : < Packet Timing Advance IE > >
                { 0 | 1 < P0 : bit (4) >
                    < BTS_PWR_CTRL_MODE : bit (1) >
                    < PR_MODE :bit (1) > }
                {   { 0 | 1 < Frequency Parameters : < Frequency Parameters IE > > }
                    { 0 | 1 < DOWNLINK_TFI_ASSIGNMENT : bit (5) > }
                    { 0 | 1 < Power Control Parameters : < Power Control Parameters IE > > }
                    { 0 | 1 < TBF Starting Time : < Starting Frame Number Description IE > > }
                    { 0 | 1 < Measurement Mapping : < Measurement Mapping struct > > }
                    < padding bits > } //       -- truncation at end of message allowed, bits '0' assumed
                 ! < Non-distribution part error : bit (*) = < no string > > }
            ! < Message escape : 1 bit (*) = <no string> > }
        ! < Address information part error : bit (*) = < no string > > }
    ! < Distribution part error : bit (*) = < no string > > ;

< Measurement Mapping struct > ::=
    < Measurement Starting Time : < Starting Frame Number Description IE > >
    < MEASUREMENT_INTERVAL : bit (5) >
    < MEASUREMENT_BITMAP : bit (8) > ;
```

Table 33: PACKET DOWNLINK ASSIGNMENT information element details

PAGE_MODE (2 bit field)
This field is defined in clause 12.20.

PERSISTENCE_LEVEL (4 bit field for each Radio Priority 1…4)
This field is defined in subclause 12.14, PRACH Control Parameters.

Referenced address struct
This information element contains the address of the mobile station addressed by the message.

Global TFI
This information element contains the TFI of the mobile station's downlink TBF or uplink TBF. This field is defined in clause 12.10.

TLLI (32 bit field)

This field is defined in subclause 12.16.

MAC_MODE (1 bit field)
This information field indicates the medium access method to be used during the TBF.

bit
2 1
0 0 Dynamic Allocation
0 1 Extended Dynamic Allocation
1 0 Fixed Allocation, not half duplex mode
1 1 Fixed Allocation, half duplex mode

RLC_MODE (1 bit field)
This field indicates the RLC mode of the requested TBF.

0 RLC acknowledged mode
1 RLC unacknowledged mode

CONTROL_ACK (1 bit field)
This field shall be set to '1' if the network establishes a new downlink TBF for the mobile station whose timer T3192 is running. Otherwise this field shall be set to '0'.

TIMESLOT_ALLOCATION (8 bit field)
This field is defined in subclause 12.18.

Packet Timing Advance
This information element is defined in subclause 12.12.

P0 (4 bit field)
For description and encoding, see the Packet Uplink Assignment message.

BTS_PWR_CTRL_MODE (1 bit field)
For description and encoding, see the Packet Uplink Assignment message.

PR_MODE (1 bit field)
For description and encoding, see the Packet Uplink Assignment message.

Power Control Parameters
This information element is defined in subclause 12.13.

Frequency Parameters
This information element is defined in subclause 12.8.

DOWNLINK_TFI_ASSIGNMENT (5 bit field)
This information element, if present, assigns the TFI to the mobile station to identify to downlink TBF described by this message. TFI is encoded as defined in subclause 12.15.

TBF Starting Time
The TBF Starting Time field contains a starting time that indicates the TDMA framenumber during which the assigned TBF may start. If no downlink TBF is in progress, the mobile station need not monitor the TFI field of downlink RLC data blocks until the indicated TDMA framenumber. After the indicated TDMA framenumber, the mobile station shall operate as during a downlink TBF. If a downlink TBF is already in progress, the mobile station shall continue to use the parameters of the existing TBF until the TDMA framenumber occurs. When the indicated TDMA framenumber occurs, the mobile station shall immediately begin to use the new parameters assigned. This information element is defined in subclause 12.21.

Measurement Starting Time
The Measurement Starting Time field contains a starting time that indicates the framenumber during which the first assigned measurement period shall occur. The mobile station must make one or more neighbour cell power measurements during the assigned framenumber and during the following 3 TDMA frames. This information element is defined in subclause 12.21.

MEASUREMENT_BITMAP (8 bit field)
This information field indicates the timeslots assigned for use during measurement periods. The field as a bitmap where

each bit corresponds with a timeslot number. Bit 1 corresponds to TS0; Bit 2 to TS1...

0 the MS shall receive downlink data during this timeslot
1 the MS shall make measurements during the timeslot

MEASUREMENT_INTERVAL (5 bit field)
The Measurement Interval field indicates the number of block periods from the start of one assigned measurement period to the beginning of the next measurement period.

bit 5 4 3 2 1	
0 0 0 0 0	make measurements during every block period
0 0 0 0 1	make measurements during every other block period
0 0 0 1 0	make measurements during every 3rd block period
. . .	
1 1 1 1 1	make measurements during every 32nd block period

11.2.8a Void

11.2.8 Packet Downlink Dummy Control Block

This message is sent on the PCCCH or PACCH by the network to the mobile station as a fill message with either of the optional parameters PAGE_MODE and PERSISTENCE_LEVEL or with no content.

Message type: PACKET DOWNLINK DUMMY CONTROL BLOCK

Direction: network to mobile station

Classification: distribution message

Table 34: PACKET DOWNLINK DUMMY CONTROL BLOCK information elements

< Packet Downlink Dummy Control Block message content > ::= < **PAGE_MODE** : bit (2) > { 0 | 1 <**PERSISTENCE_LEVEL** : bit (4) > * 4 } < padding bits > ! < Distribution part error : bit (*) = < no string > > ;

Table 35: PACKET DOWNLINK DUMMY CONTROL BLOCK information element details

PAGE_MODE (2 bit field) This field is defined in clause 12.20. **PERSISTENCE_LEVEL** (4 bit field for each Radio Priority 1…4) This field is defined in subclause 12.14, PRACH Control Parameters.

11.2.8b Packet Uplink Dummy Control Block

This message is sent on the PACCH from the mobile station to the network when the mobile station has no other block to transmit.

Message type: PACKET UPLINK DUMMY CONTROL BLOCK

Direction: mobile station to network

Table 36: PACKET UPLINK DUMMY CONTROL BLOCK information elements

< Packet Uplink Dummy Control Block message content > ::=
< **TLLI** : bit (32) >
< padding bits > ;

Table 37: PACKET UPLINK DUMMY CONTROL BLOCK information element details

TLLI (32 bit field) This field contains the TLLI of the mobile station. This field is encoded as defined in subclause 12.16.

11.2.9 Packet Measurement Report

This message is sent on the PACCH from the mobile station to the network to report measurement results. The message may contain measurement results from the Network Control measurements or from the Extended measurements, but not both simultaneously. More than one message may be required depending on the number of measurements to report.

Message type: PACKET MEASUREMENT REPORT

Direction: mobile station to network

Table 38: PACKET MEASUREMENT REPORT message content

```
< Packet Measurement Report message content > ::=
    < TLLI : bit (32) >
    { 0 | 1 < PSI5_CHANGE_MARK : bit (2) > }
    { 0 < NC Measurement Report : < NC Measurement Report struct > >
     | 1 < EXT Measurement Report : < EXT Measurement Report struct > > }
    < padding bits > ;

< NC Measurement Report struct > ::=
    < NC_MODE : bit (1) >
    < RXLEV_SERVING_CELL : bit (6) >
    { 0 | 1 < INTERFERENCE_SERVING_CELL : bit (6) > }
    < NUMBER_OF_NC_MEASUREMENTS : bit (3) >
    {   < FREQUENCY_N : bit (6) >
        { 0 | 1 < BSIC_N : bit (6) > }
        < RXLEV_N : bit (6) > } * (val(NUMBER_OF_NC_MEASUREMENTS)) ;

< EXT Measurement Report struct > ::=
    < EXT_REPORTING_TYPE: 00 | 01 | 10 >
    { 0 | 1
        { 0 | 1 < I_LEVEL_TN0 : bit (6) > }
        { 0 | 1 < I_LEVEL_TN1 : bit (6) > }
        { 0 | 1 < I_LEVEL_TN2 : bit (6) > }
        { 0 | 1 < I_LEVEL_TN3 : bit (6) > }
        { 0 | 1 < I_LEVEL_TN4 : bit (6) > }
        { 0 | 1 < I_LEVEL_TN5 : bit (6) > }
        { 0 | 1 < I_LEVEL_TN6 : bit (6) > }
        { 0 | 1 < I_LEVEL_TN7 : bit (6) > } }
    < NUMBER_OF_MEASUREMENTS : bit (5) >
    {   < FREQUENCY_N : bit (6) >
        { 0 | 1 < BSIC_N : bit (6) > }
        < RXLEV_N : bit (6) > } * (val(NUMBER_OF_MEASUREMENTS)) ;
```

Table 39: PACKET MEASUREMENT REPORT information element details

TLLI (32 bit field)
This field contains the TLLI of the mobile station. This field is encoded as defined in clause 12.16.

PSI5_CHANGE_MARK (2 bit field)
This field shall contain the value of the PSI5_CHANGE_MARK in the PSI5 message containing the list of frequencies to measure. If the measurement order has been initiated by a PACKET MEASUREMENT ORDER message, the PSI5_CHANGE_MARK parameter shall be omitted from the message.

NC_MODE (1 bit field)
This field indicates if the mobile station was in mode NC1 or NC2 when sending the measurement report.

0 Mobile station in mode NC1
1 Mobile station in mode NC2

RXLEV_SERVING_CELL (6 bit field)
This field contains the value of the RXLEV parameter for the serving cell calculated by the mobile station (see GSM 05.08). This field is encoded as the binary representation of the RXLEV parameter value defined in GSM 05.08. Range 0 to 63

INTERFERENCE_SERVING_CELL (6 bit field)
This field contains the average interference level γ_{ch} for the serving cell measured on the PCCCH if a valid value is available (measured in packet idle mode, see GSM 05.08). The field is encoded as the binary representation of the I_LEVEL value defined in GSM 05.08.

EXT_REPORTING_TYPE (2 bit field)
This field indicates the type of Extended measurement report also indicated by the same parameter in the PSI5 or in the PACKET MEASUREMENT ORDER message (see GSM 05.08).

bit
2 1
0 0 Type 1 measurement reporting
0 1 Type 2 measurement reporting
1 0 Type 3 measurement reporting
1 1 Reserved.

I_LEVEL_TN0 (6 bit field)
I_LEVEL_TN1 (6 bit field)
I_LEVEL_TN2 (6 bit field)
I_LEVEL_TN3 (6 bit field)
I_LEVEL_TN4 (6 bit field)
I_LEVEL_TN5 (6 bit field)
I_LEVEL_TN6 (6 bit field)
I_LEVEL_TN7 (6 bit field)
These fields contain the I_LEVEL value measured on timeslots 0 through 7, respectively for the frequency specified either in the Packet Measurement Order or in the PSI5 message. . The fields are transferred if the data is available and each field is encoded as the binary representation of the I_LEVEL value defined in GSM 05.08.
Range 0 to 63

FREQUENCY_N (6 bit field)
This field indicates the frequency upon which the measurement was made. The field is an index into the resulting Frequency List either for NC- or for EXT- measurements.

NC Measurements

The resulting frequency list for NC Measurements is based on BA(GPRS) frequency list (received either on BCCH or PBCCH) (see GSM 05.08). Frequencies can then be added to or removed from BA(GPRS), producing a resulting frequency list. Addition or removal of frequencies are defined either in the Packet Cell Change Order message or in the Packet Measurement Order message.
As the Packet Measurement Order message can be repeated in a number of instances each message instance can contain a sub-list of frequency parameters. The sub-lists shall then be concatenated in ascending message instance order and added to the end of the BA(GPRS) list into a resulting frequency list. Each frequency position in the resulting frequency list shall then be assigned an ascending index used for measurement reports. If the same combination of frequency and BSIC (ARFCN,BSIC) is defined more than once in the resulting list, each occurrence will get an index, but measurements shall only be performed and reported for the last added position.

The FREQUENCY_N = 0 refers to the first frequency and FREQUENCY_N = n refers to the last frequency in the BA(GPRS) list. FREQUENCY_N = n+1 refers then to the first frequency in the'Add Frequency list struct' in the first message instance and N = n+m to the last frequency in the 'Add Frequency list struct' in the last message instance of the Packet Measurement Order message or of the Packet Cell Change Order message. Deletion of frequencies in a measurement order does not affect the index.

EXT Measurements

The 'EXT Measurements Parameters' can be repeated either in a sequence of PSI5 message instances or in a sequence of Packet Measurement Order message instances where each message instance can contain one or more sub-lists of frequency (ARFCN) parameters. The sub-lists of either of the messages shall then be concatenated into a resulting frequency list in order of appearance within a message instance and then in order of ascending message instances. Each added frequency position in the resulting frequency list shall then be assigned an ascending index used for measurement reports. If the same frequency is defined more than once in the resulting list, each occurrence will get en index, but measurements shall only be performed and reported for the last added position.

For EXT measurements the FREQUENCY_N = 0 refers to the first frequency within the first message instance and

FREQUENCY_N = n refers to the last frequency in the 'EXT Frequency list struct' within the last message instance.

Range 0 to 63

BSIC_N (6 bit field)
This field indicates the BSIC of the frequency upon which the measurement was made. For EXT measurements this field shall be include only if the Frequency List Type is type 1 or type 2. For type 1, this field is included if the BSIC was decoded and shall not be included if the BSIC was not decoded. For NC measurements this field shall be included only for frequencies that refer to the BA(BCCH) list. The field is encoded as the BSIC value defined in GSM 04.08.
Range 0 to 63

RXLEV_N (6 bit field)
This field indicates the measured RXLEV of the frequency upon which the measurement was made (see GSM 05.08). This field is encoded as the RXLEV value defined in GSM 04.08.
Range 0 to 63

11.2.9a Void

11.2.9b Packet Measurement Order

This message is sent on the PCCCH or PACCH by the network to a mobile station giving information for NC and EXT measurement reporting and network controlled cell reselection. If not all information fits into one message, the remaining information will be sent in other instances of the Packet Measurement Order message.

Message type: PACKET MEASUREMENT ORDER

Direction: network to mobile station

Classification: distribution message

Table 40: Packet Measurement Order information elements

```
< Packet Measurement Order message content > ::=
    < PAGE_MODE : bit (2) >
    {   { 0 < Global TFI : < Global TFI IE > >
         | 10    < TLLI : bit (32) > }
        {   < PMO_INDEX : bit (3) >
            < PMO_COUNT : bit (3) >
            { 0 | 1 < NC Measurement Parameters : < NC Measurement Parameters struct > > }
            { 0 | 1 < EXT Measurement Parameters : < EXT Measurement Parameters struct > > }
            < padding bits >
             ! < Non-distribution part error : bit (*) = < no string > > }
         ! < Address information part error : bit (*) = < no string > > }
     ! < Distribution part error : bit (*) = < no string > > ;

< NC Measurement Parameters struct > ::=
    < NETWORK_CONTROL_ORDER : bit (2) >
    { 0 | 1  < NC_ NON_DRX_PERIOD : bit (3) >
        < NC_REPORTING_PERIOD_I : bit (3) >
        < NC_REPORTING_PERIOD_T : bit (3) > }
    { 0 | 1  < NC_FREQUENCY_LIST : < NC Frequency list struct > > } ;

< NC Frequency list struct > ::=
    { 0 | 1 { < NR_OF_REMOVED_FREQ : bit (5) >
            { < REMOVED_FREQ_INDEX : bit (6) > } * (1 + val(NR_OF_REMOVED_FREQ)) } }
    { 1 < List of added Frequency struct : < Add Frequency list struct > >} ** 0;

< Add Frequency list struct > ::=
    < START_FREQUENCY : bit (10) >
    < BSIC : bit (6) >
    { 0 | 1  < Cell selection params : < Cell Selection struct > > }
    < NR_OF_FREQUENCIES : bit (5) >
    < FREQ_DIFF_LENGTH : bit (3) >
    {   < FREQUENCY_DIFF : bit (1+val(FREQ_DIFF_LENGTH)) >
        < BSIC : bit (6) >
```

```
        { 0 | 1  < Cell selection params : < Cell Selection struct > > } } * (val(NR_OF_FREQUENCIES));

< Cell Selection struct > ::=
    < CELL_BAR_ACCESS_2 : bit (1) >
    < EXC_ACC : bit >
    < SAME_RA_AS_SERVING_CELL : bit (1) >
    { 0 | 1  < GPRS_RXLEV_ACCESS_MIN : bit (6) >
        < GPRS_MS_TXPWR_MAX_CCH : bit (5) > }
    { 0 | 1  < GPRS_TEMPORARY_OFFSET : bit (3) >
        < GPRS_PENALTY_TIME : bit (5) > }
    { 0 | 1  < GPRS_RESELECT_OFFSET : bit (5) > }
    { 0 | 1  < HCS params : < HCS struct > > } ;
    { 0 | 1  < SI13_PBCCH_LOCATION : < SI13_PBCCH_LOCATION struct > > } ;
< SI13_PBCCH_LOCATION struct > ::=
    { 0 < SI13_LOCATION : bit (1) >
     | 1 < PBCCH_LOCATION : bit (2) >
        < PSI1_REPEAT_PERIOD : bit (4) > } ;

< HCS struct > ::=
    < PRIORITY_CLASS : bit (3) >
    < HCS_THR : bit (5) > ;

< EXT Measurement Parameters struct > ::=
    {   < EXT_MEASUREMENT_ORDER : bit (2) == 00 >      < no string >
    |   < EXT_MEASUREMENT_ORDER : bit (2) == 01 >      < EM1 struct >
    |   < EXT_MEASUREMENT_ORDER : bit (2) == 10 >      < no string >
    |   < EXT_MEASUREMENT_ORDER : bit (2) == 11 >      < no string > } ;

< EM1 struct > ::=
    { 0 | 1 < EXT_REPORTING_TYPE: bit (2) == 00 >        < no string >
    |       < EXT_REPORTING_TYPE: bit (2) == 01 >        < NCC_PERMITTED : bit (8) >
    |       < EXT_REPORTING_TYPE: bit (2) == 10 >        { 0 | 1 < INT_FREQUENCY : bit (5) > }
    |       < EXT_REPORTING_TYPE: bit (2) == 11 >        < no string > }
    { 0 | 1 < EXT_REPORTING_PERIOD : bit (3) >}
    { < EXT_FREQUENCY_LIST : < EXT Frequency list description struct > > } ;

< EXT Frequency list description struct > ::=
    < EXT Frequency list struct > { 1 < EXT Frequency list struct > } ** 0 ;

< EXT Frequency list struct > ::=
    < START_FREQUENCY : bit (10) >
    < NR_OF_FREQUENCIES : bit (5) >
    < FREQ_DIFF_LENGTH : bit (3) >
    { < FREQUENCY_DIFF : bit (1+val(FREQ_DIFF_LENGTH)) > } * (val(NR_OF_FREQUENCIES)) ;
```

Table 41: Packet Measurement Order information element details

The Packet Measurement Order message contains measurement parameters either for Network Control (NC) measurements or for Extended (EXT) measurements or for both. If parameters for one of the measurement types are not included, a previous Packet Measurement Order message for that type shall still be valid.

The 'NC measurement parameters struct' contains the Network Control Order, the NC parameters and an NC Frequency List struct. If the value of the Network Control Order or any of the NC parameters differs between instances of the message, the value of the parameter in the instance with the highest PMO_INDEX shall be valid and all others shall be ignored.
If included, the NC Frequency List struct is a deviation list which contains removed or added frequencies to the BA(GPRS) list (see GSM 05.08). When the MS receives the message in a cell without a PBCCH allocated, the NC Frequency List struct refers to the sorted list sent out in SI2, SI2bis and SI2ter on BCCH as specified in GSM 04.08. When received in a cell with a PBCCH allocated the NC Frequency List struct refers to the indexed neighbour cell list sent out in PSI3 and PSI3bis messages on PBCCH. The list of added frequencies may contain GPRS cell re-selection parameters. In case an added frequency (combination of frequency and BSIC) already exists in the BA(GPRS) list, the cell re-reselection parameters for that cell may have been modified in the NC Frequency List struct. In that case only the new parameters shall be used for cell re-selection and only the new position shall be referred to in measurement reports. The total number of frequencies to measure shall not exceed 32. If the list includes more than 32 frequencies to

be measured, the MS shall only measure the first 32 frequencies with the lowest indexes.

If the NC frequency list struct is not included in the 'NC measurement parameters struct' (no added or deleted frequencies) the mobile station shall return to BA(GPRS).

The 'EXT measurement parameters struct' contains the EXT Measurement Order, the EXT parameters and one or more EXT Frequency List structs. If the value of the EXT Measurement Order or any of the EXT parameters differs between instances of the message, the value of the parameter in the instance with the highest index shall be valid and all others shall be ignored.
The EXT Frequency List struct is a frequency list that contains frequencies to be measured on (see GSM 05.08).

PAGE_MODE (2 bit field)
This field is defined in clause 12.20.

PMO_INDEX (3 bit field) and **PMO_COUNT** (3 bit field)
The purpose of the PMO_INDEX field and the PMO_COUNT field is to indicate the number of individual messages within the sequence of Packet Measurement Order messages and to assign an index to identify each one of them. The PMO_INDEX field is binary coded, range: 0 to 7, and provides an index to identify the individual Packet Measurement Order message. The PMO_COUNT field is binary coded, range: 0 to 7, and provides the PMO_INDEX value for the last (highest indexed) message in the sequence of Packet Measurement Order messages. A measurement order shall not be effected by the mobile station until all instances of a Packet Measurement Order message is received.

Global TFI
If present, this information element indicates the mobile station to which this message is addressed. This field is defined in subclause 12.10.

TLLI (32 bit field)
If present, this field indicates the mobile station to which this message is addressed. This field is defined in subclause 12.16.

The NC Measurement Parameters gives the parameters for the serving cell and may contain frequency list deviations (add/delete) to the BA(GPRS) either on PBCCH or on BCCH.

The EXT Measurement Parameters gives the EXT measurement parameters to be used in the serving cell and contains one or more frequency lists.

The **NC_Measurement_Parameters struct** contains the NETWORK_CONTROL_ORDER and the optional parameters NC_NON_DRX_PERIOD, NC_REPORTING_PERIOD_I, NC_REPORTING_PERIOD_T and the NC_FREQUENCY LIST.

NETWORK_CONTROL_ORDER (2 bit field)
The NETWORK_CONTROL_ORDER field is coded according to the following table (for definition of NCx see GSM 05.08);

bit 2 1	
0 0	NC0
0 1	NC1
1 0	NC2
1 1	RESET

NC_NON_DRX_PERIOD (3 bit field)
NC_REPORTING_PERIOD_I (3 bit field)
NC_REPORTING_PERIOD_T (3 bit field)
For detailed element definitions, see the PSI5 message.

NR_OF_REMOVED_FREQ (5 bit field)
1+val(NR_OF_REMOVED_FREQ) indicates the number of frequencies in the BA(GPRS)-list which shall not be used for NC-measurements and gives the number of instances of the parameter REMOVED_FREQ_INDEX.
Range of NR_OF_REMOVED_FREQ: 0 to 31.

REMOVED_FREQ_INDEX (6 bit field)
This field indicates the index to the frequency position (0 n) in the BA(GPRS) sent on PBCCH or on BCCH. The frequency pointed at shall not be used for NC-measurements. The index = 0 shall point to the first frequency in the first message instance and index = n to the last frequency in the last message instance carrying the BA(GPRS) list on

PBCCH. If BA(GPRS) refers to BCCH the index shall point to the sorted list of ARFCNs defined in the 'Measurement Results information element in GSM 04.08. The removed frequencies shall keep their indexes, but no measurements shall be performed.
Range: 0 to 63.

Add Frequency list struct and EXT Frequency list struct contains the frequency list for NC measurements and for EXT measurements respectively.

START_FREQUENCY (10 bit field)
For detailed element definition see the PSI5 message.

BSIC (6 bit field)
This field is encoded as the 'Base Station Identity Code' defined in GSM 03.03.
Range 0 to 63

FREQ_DIFF_LENGTH (3 bit field)
This field is required to calculate the number of bits to be used for the FREQUENCY_DIFF field in the current frequency group.

FREQUENCY_DIFF (1+val(FREQ_DIFF_LENGTH) bit field)
Each FREQUENCY_DIFF parameter field specifies the difference in frequency to the next carrier to be defined. The FREQUENCY_DIFF parameter encodes a non negative integer in binary format (W).

Each frequency following the start frequency (ARFCN(0)) and belonging to the Frequency List struct is then calculated by the formula ARFCN(n) = (ARFCN(n-1) + W(n)) modulus 1024, n=1, . . ., val(NR_OF_FREQUENCIES.The **Cell selection params** in the Add Frequency list struct shall only be included when a frequency is added to the NC_FREQUENCY_LIST. For description of the cell selection parameters see, Table: *PSI3 information element details.*

EXT_MEASUREMENT_ORDER (2 bit field)
The EXT_MEASUREMENT_ORDER field indicates to the mobile station how to interpret the rest of the extended measurement parameters. This field is coded according to the following table (for definition of EMx, see 05.08):

bit 2 1	
0 0	EM0
0 1	EM1
1 0	Reserved.
1 1	RESET

If the EXT_MEASUREMENT_ORDER parameter = EM1 the other optional parameters in the EXT Measurement parameters struct may be included in at least one instance of the message.

If the EXT_MEASUREMENT_ORDER parameter = RESET the mobile station shall stop performing EXT Measurements and stop sending EXT measurement reports (if not ordered in the PSI5 message).

For description of the following Extended Measurement parameters see the PSI5 message

NCC_PERMITTED

EXT_REPORTING_TYPE

EXT_REPORTING_PERIOD

INT_FREQUENCY

11.2.9c Packet Mobile TBF Status

This message is sent from the mobile station to the network on the uplink PACCH to indicate erroneous messages have been received relating to either a downlink or an uplink TBF.

Message type: PACKET MOBILE TBF STATUS

Direction: mobile station to network

Table 42: Packet MOBILE TBF STATUS information elements

< Packet Mobile TBF Status message content > ::=
< **GLOBAL TFI** : < Global TFI IE > >
< **TBF_CAUSE** : bit (3) >
{ 0 | 1 < **STATUS_MESSAGE_TYPE** : bit (6) > }
< padding bits > ;

Table 43: Packet MOBILE TBF STATUS information element details

Global TFI IE
This information element contains the TFI of the mobile station's downlink TBF or uplink TBF. This field is defined in clause 12.10.

TBF_CAUSE (3 bit field)
The TBF_CAUSE field indicates the error cause value of the current TBF. This field is encoded according to the following table:

bit 3 2 1	
0 0 0	Normal event;
0 0 1	Status, unspecified;
0 1 0	Syntactically incorrect message, non-distribution part error;
0 1 1	Syntactically incorrect message, message escape;
1 0 0	Message not compatible with current protocol state.

All other values are reserved and may be interpreted "Status, unspecified".

STATUS_MESSAGE_TYPE (6 bit field)
The STATUS_MESSAGE_TYPE field, if present, is the binary representation of the message type of the downlink RLC/MAC control message that caused the status condition. Message type values are defined in clause 11.2.0.1.

11.2.10 Packet Paging Request

This message is sent on the PCCCH by the network to trigger channel access by up to four mobile stations, for either TBF or RR connection establishment. It may also be sent on PACCH to a mobile station in packet transfer mode to indicate page request for RR connection establishment. The mobile stations are identified by either IMSI, TMSI or P-TMSI. Depending on the method used to identify the mobile station, 1 - 4 mobile stations can be addressed in the message. Special requirements for the transmission of this message on PACCH applies, see GSM 05.02.

Message type: PACKET PAGING REQUEST MESSAGE

Direction: network to mobile station

Classification: distribution message

Table 44: PACKET PAGING REQUEST message content

```
< Packet Paging Request message content > ::=
    < PAGE_MODE : bit (2) >
    { 0 | 1 < PERSISTENCE_LEVEL : bit (4) >* 4}
    { 0 | 1 < NLN : bit (2) > }
    {   { 1 < Repeated Page info : < Repeated Page info struct > > } ** 0
        < padding bits > } //       -- truncation at end of message allowed, bits '0' assumed
     ! < Distribution part error : bit (*) = < no string > > ;

< Repeated Page info struct > ::=
    { 0                                     -- Page request for TBF establishment
        { 0 < PTMSI : bit (32) >
        | 1  < Length of Mobile Identity contents : bit (4) >
            < Mobile Identity : octet (val (Length of Mobile Identity contents)) > }
    | 1                                     -- Page request for RR conn. establishment
        { 0 < TMSI : bit (32) >
        | 1  < Length of Mobile Identity contents : bit (4) >
            < Mobile Identity : octet (val (Length of Mobile Identity contents)) > }
        < CHANNEL_NEEDED : bit (2) >
        { 0 | 1 < eMLPP_PRIORITY : bit (3) > } }
    ! < Ignore : bit (*) = <no string> > ;
```

Table 45: PACKET PAGING REQUEST information element details

PAGE_MODE (2 bit field)
This field is defined in clause 12.20.

PERSISTENCE_LEVEL (4 bit field for each Radio Priority 1...4)
This field is defined in subclause 12.14, PRACH Control Parameters.

NLN (2 bit field)
Notification List Number - This field may only be present if the message contains at least one page request for an RR connection establishment. The field is coded as defined in the P1 Rest Octets information element in GSM 04.08.

Repeated Page info struct
The Repeated Page info struct is repeated as many times as required to fulfil the number of wanted paged mobiles. If the Paging Request Message is used with only P-TMSIs or TMSIs, the field can be repeated up to four times within one message. If the Paging Request Message is used with only IMSIs, the field can be repeated up to two times within one message.

The first bit in the Repeated Page info field indicates if this is a page request for TBF connection establishment or for RR connection establishment.

A page request for TBF connection establishment can either be addressed with P-TMSI or IMSI.

A page request for RR connection establishment contains a Channel Needed and optionally a Priority parameter and can either be addressed with TMSI or IMSI.

PTMSI (32 bit field)
The Packet Temporary Mobile Station Identity (PTMSI) is defined in GSM 03.03. This field is encoded as a binary number.
Range 0 to 4294967295

Mobile Identity (variable length octet string)
This octet string is the representation of the *Mobile Identity*. It shall provide the international mobile subscriber identity, IMSI. The encoding of this octet string is the *value part* (starting with octet 3) of the type 4 information element *Mobile Identity* defined in GSM 04.08.

Any value other than IMSI for the type of identity in this octet string is spare. Such mobile identity shall be disregarded by the receiver but any further occurrence of the Repeated Page Info struct in the message shall be analysed.

TMSI (32 bit field)
TMSI is a unique Temporary Mobile Subscriber Identity. TMSI is associated with the mobile subscriber and defined in GSM 03.03. This field is coded as a binary number.

Range 0 to 4294967295

CHANNEL_NEEDED (2 bit field)
The channel needed field indicates which type of channel is needed for the mobile station for the transaction linked to the paging procedure. The field is coded according to following table:

bit 2	bit 1	
0	0	Any channel
0	1	SDCCH
1	0	TCH/F (Full rate)
1	1	TCH/H or TCH/F (Dual rate)

eMLPP_PRIORITY (3 bit field)
The optional eMLPP_PRIORITY field relates to Mobile Station Identity i(i = 1,2,3,4) and may only be present when the page relates to a paging request to trigger RR connection establishment. The eMLPP_PRIORITY field is coded as the Priority field defined in the P1 Rest Octets information element in GSM 04.08.

11.2.11 Packet PDCH Release

This message is sent on PACCH by the network to notify all mobile stations listening to that PDCH that one or more PDCHs will be immediately released and become unavailable for packet data traffic.

Message type: PACKET PDCH RELEASE

Direction: network to mobile station

Classification: distribution message

Table 46: PACKET PDCH RELEASE information elements

```
< Packet PDCH Release message content > ::=
    < PAGE_MODE : bit (2) >
    { 1 < TIMESLOTS_AVAILABLE : bit (8) > }
    < padding bits >
     ! < Distribution part error : bit (*) = < no string > > ;
```

Table 47: PACKET PDCH RELEASE information element details

PAGE_MODE (2 bit field)
This field is defined in clause 12.20.

TIMESLOTS_AVAILABLE (8 bit field)
This information field indicates the timeslots assigned for GPRS use on the current MAIO or ARFCN. Bit 8 indicates the status of timeslot 0, bit 7 indicates the status of timeslot 1, etc.

0 Timeslot is not assigned
1 Timeslot is assigned

NOTE: If the bit preceding the parameter TIMESLOTS_AVAILABLE is received = 0 a distribution part error should be generated by the mobile station. To allow compatibility with early GPRS mobile stations in Release 97 such mobile stations may interpret this message, if received with the bit preceding the parameter TIMESLOTS_AVAILABLE equal to 0, as a command to release the timeslot on which the message was received.

11.2.12 Packet Polling Request

This message is sent on the PCCCH or PACCH by the network to the mobile station to solicit a PACKET CONTROL ACKNOWLEDGEMENT message from the mobile station.

Message type: PACKET POLLING REQUEST

Direction: network to mobile station

Classification: non-distribution message

Table 48: PACKET POLLING REQUEST information elements

```
< Packet Polling Request message content > ::=
    < PAGE_MODE : bit (2) >
    {   { 0 < Global TFI : < Global TFI IE > >
          | 10    < TLLI : bit (32) >
          | 110   < TQI : bit (16) > }
        { < TYPE_OF_ACK : bit (1) >
        {    < padding bits >
             ! < Non-distribution part error : bit (*) = < no string > > }
          ! < Address information part error : bit (*) = < no string > > }
     ! < Distribution part error : bit (*) = < no string > > ;
```

Table 49: PACKET POLLING REQUEST information element details

PAGE_MODE (2 bit field)
This field is defined in clause 12.20.

TQI (16 bit field)
This field is defined in subclause 12.17.

TLLI (32 bit field)
This field is defined in subclause 12.16.

Global TFI
This information element contains the TFI of the mobile station's downlink TBF or uplink TBF. This field is defined in clause 12.10.

TYPE_OF_ACK
This field indicates the format of the PACKET CONTROL ACKNOWLEDGEMENT message requested from the mobile station by the PACKET POLLING REQUEST message.

0 PACKET CONTROL ACKNOWLEDGEMENT message format shall be sent as four access bursts
1 PACKET CONTROL ACKNOWLEDGEMENT message format shall be an RLC/MAC control block

11.2.13 Packet Power Control/Timing Advance

This message is sent on PACCH by the network to the mobile station in order to update the mobile station timing advance or power control parameters.

Message type: PACKET POWER CONTROL/TIMING ADVANCE

Direction: network to mobile station

Classification: non-distribution message

Table 50: PACKET POWER CONTROL/TIMING ADVANCE information elements

```
< Packet Power Control/Timing Advance message content > ::=
    < PAGE_MODE : bit (2) >
    {   { 0 < Global TFI : < Global TFI IE > >
          | 110  < TQI : bit (16) >
          | 111  < Packet Request Reference : < Packet Request Reference IE > > }
        { 0      -- Message escape
            {   { 0 | 1 < Global Power Control Parameters : < Global Power Control Parameters IE >> }
                { 0 < Global Packet Timing Advance : < Global Packet Timing Advance IE > >
                      < Power Control Parameters : < Power Control Parameters IE > >
                  | 1 { 0 < Global Packet Timing Advance : < Global Packet Timing Advance IE > >
                        | 1 < Power Control Parameters : < Power Control parameters IE > > } }
                < padding bits >
                ! < Non-distribution part error : bit (*) = < no string > > }
            ! < Message escape : 1 bit (*) = <no string> > }
        ! < Address information part error : bit (*) = < no string > > }
    ! < Distribution part error : bit (*) = < no string > > ;
```

Table 51: PACKET POWER CONTROL/TIMING ADVANCE information element details

Global Power Control Parameters IE
This information field is defined in subclause 12.9.

Global_Packet Timing Advance IE
This information field is defined in subclause 12.12a.

Power Control Parameters IE
This information field is defined in subclause 12.13.

Referenced Address struct
This information element indicates the identity of the mobile station to which this message is addressed. All other mobile stations shall ignore this message.

Global TFI IE
This information element contains the TFI of the mobile station's downlink TBF or uplink TBF. This field is defined in subclause 12.10.

TQI (16 bit field)
This field is defined in subclause 12.17.

Packet Request Reference IE
This information element is defined in subclause 12.11.

11.2.14 Packet PRACH Parameters

This message is sent on the PCCCH by the network to all mobile stations within the cell to update the PRACH parameters in between Packet System Information messages containing PRACH parameters.

Message type: PACKET PRACH PARAMETERS

Direction: network to mobile station

Classification: distribution message

Table 52: PACKET PRACH PARAMETERS information elements

```
< Packet PRACH Parameters message content > ::=
    < PAGE_MODE : bit (2) >
    < PRACH Control Parameters : < PRACH Control Parameters IE > >
    < padding bits >
    ! < Distribution part error : bit (*) = < no string > > ;
```

Table 53: PACKET PRACH PARAMETERS information element details

PAGE_MODE (2 bit field) This field is defined in clause 12.20. **PRACH Control Parameters** This information element is defined in subclause 12.14.

11.2.15 Packet Queueing Notification

This message is sent on the PCCCH by the network to the mobile station to notify the mobile station that it is being placed in queue. The message allocates a Temporary Queueing Identity to the mobile station.

Message type: PACKET QUEUEING NOTIFICATION

Direction: network to mobile station

Classification: non-distribution message

Table 54: PACKET QUEUEING NOTIFICATION information elements

```
< Packet Queueing Notification message content > ::=
    < PAGE_MODE : bit (2) >
    {   111 < Packet Request Reference : < Packet Request Reference IE > >
        {   < TQI : bit (16) >
            < padding bits >
            ! < Non-distribution part error : bit (*) = < no string > > }
        ! < Address information part error : bit (*) = < no string > > }
    ! < Distribution part error : bit (*) = < no string > > ;
```

Table 55: PACKET QUEUEING NOTIFICATION information element details

PAGE_MODE (2 bit field) This field is defined in clause 12.20. **Packet Request Reference** This information element is defined in subclause 12.11. **TQI** (16 bit field) This information field is defined in subclause 12.17.

11.2.16 Packet Resource Request

This message is sent on the PACCH by the mobile station to the network to request a change in the uplink resources assigned.

Message type: PACKET RESOURCE REQUEST

Direction: mobile station to network

Table 56: PACKET RESOURCE REQUEST information elements

```
< Packet Resource Request message content > ::=
    { 0 | 1 < ACCESS_TYPE : bit (2) > }
    { 0 < Global TFI : < Global TFI IE > >
    | 1 < TLLI : < TLLI IE > > }
    { 0 | 1 < MS Radio Access Capability : < MS Radio Access Capability IE > > }
    < Channel Request Description : < Channel Request Description IE > >
    { 0 | 1 < CHANGE_MARK : bit (2) > }
    < C_VALUE : bit (6) >
    { 0 | 1 < SIGN_VAR : bit (6) >}
    { 0 | 1 < I_LEVEL_TN0 : bit (4) > }
    { 0 | 1 < I_LEVEL_TN1 : bit (4) > }
    { 0 | 1 < I_LEVEL_TN2 : bit (4) > }
    { 0 | 1 < I_LEVEL_TN3 : bit (4) > }
    { 0 | 1 < I_LEVEL_TN4 : bit (4) > }
    { 0 | 1 < I_LEVEL_TN5 : bit (4) > }
    { 0 | 1 < I_LEVEL_TN6 : bit (4) > }
    { 0 | 1 < I_LEVEL_TN7 : bit (4) > }
    < padding bits > ;
```

Table 57: PACKET RESOURCE REQUEST information element details

Global TFI
This information element contains the TFI of the mobile station's uplink TBF, if available, or the TFI of the mobile station's downlink TBF. If no TFI is available, this field is omitted. This field is defined in clause 12.10.

ACCESS_TYPE (2 bit field)
This field indicates the reason for requesting the access. It shall be included only in response to a single block assignment.

bit
2 1
0 0 Two Phase Access Request
0 1 Page Response
1 0 Cell Update
1 1 Mobility Management procedure

TLLI
This information element is defined in Clause 12.16.

MS Radio Access Capability
This information element is coded as defined by the *MS RA capability value part* defined in the *MS Radio Access Capability* IE defined in GSM 04.08. This information element is sent only during two phase access. When this information element is sent, all spare bits shall be suppressed by the transmitter.

Channel Request Description
This information element is defined in clause 12.7.

CHANGE_MARK (2 bit field)
This field contains the PSI2_CHANGE_MARK value stored by the mobile station's if PBCCH is present in the current cell. If PBCCH is not present in the current cell, this field contains the SI13_CHANGE_MARK value stored by the mobile station. If the mobile station does not have a valid PSI2 or SI13 *change mark* for the current cell, the mobile station shall omit this field. The coding of this field is network dependent.

C_VALUE (6 bit field)
This field is encoded as the binary representation of the C value as specified in GSM 05.08.
Range 0 to 63

SIGN_VAR (6 bits)
This field contains the signal variance parameter SIGN_VAR calculated by the mobile station (see GSM 05.08). This field is not present for TBF establishment using two phase access.

bit
6 5 4 3 2 1

0 0 0 0 0 0	0dB^2 to 0.25 dB^2
0 0 0 0 0 1	>0.25 dB^2 to 0.50 dB^2
0 0 0 0 1 0	>0.50 dB^2 to 0.75 dB^2
: : :	
1 1 1 1 1 0	>15.50 dB^2 to 15.75 dB^2
1 1 1 1 1 1	>15.75 dB^2

I_LEVEL_TN0 (4 bit field)
I_LEVEL_TN1 (4 bit field)
I_LEVEL_TN2 (4 bit field)
I_LEVEL_TN3 (4 bit field)
I_LEVEL_TN4 (4 bit field)
I_LEVEL_TN5 (4 bit field)
I_LEVEL_TN6 (4 bit field)
I_LEVEL_TN7 (4 bit field)
For element definition see subclause 11.2.6 - Packet Downlink Ack/Nack.

11.2.17 Packet PSI Status

This message is sent on the PACCH from the mobile station to the network to indicate which PSI messages the mobile station has received.

Message type: PACKET PSI STATUS

Direction: mobile station to network

Table 58: PACKET PSI STATUS information elements

```
< Packet PSI Status message content > ::=
    < GLOBAL_TFI : < Global TFI IE > >
    < PBCCH_CHANGE_MARK : bit (3) >
    < Received PSI Message List : < PSI Message List struct > >
    < Received Unknown PSI Message List : < Unknown PSI Message List struct > >
    < padding bits > ;

< PSI Message List struct > ::=
    { 1 < MESSAGE_TYPE : bit (6) >
        < PSIX_CHANGE_MARK : bit (2) >
        { 0 | 1 < PSIX_COUNT : bit (4) >
                < Instance bitmap : bit (val(PSIX_COUNT) + 1) > } } ** 0
    < ADDITIONAL_MSG_TYPE : bit > ;

< Unknown PSI Message List struct > ::=
    { 1 < MESSAGE_TYPE : bit (6) > } ** 0
    < ADDITIONAL_MSG_TYPE : bit > ;
```

Table 59: PACKET PSI STATUS information element details

Global TFI (information element)
This information element identifies the TBF where this message is sent. The coding of this information element is defined in subclause 12.10.

PBCCH_CHANGE_MARK (3 bit field)
This field is the binary representation of the last PBCCH_CHANGE_MARK received in the PSI1 message on PBCCH.

Received PSI Message List (construction)
This construction contains a list of correctly received PSI messages. In this version of the protocol, the following message types may be indicated in this list: PSI2 (highest priority), PSI3, PSI3bis, PSI4 and PSI5 (lowest priority). The sender of this message may indicate as many messages in this list as can be fit into the message. Messages are listed by message type in descending order of priority. If there are more PSI messages than can be indicated in this list, the presence of additional message type(s) shall be indicated at the end of the list.

If the sender of this message has received a PSI message which is part of a consistent set of PSI messages (see 5.5.2.1.4), the Instance Bitmap may indicate which instances of this message type that have been received.

Received Unknown PSI Message List (construction)
This construction contains a list of message types that are received on PBCCH, which are not recognized as a PSI message type. In this version of the protocol, any message type except PSI1, PSI2, PSI3, PSI3bis, PSI4 or PSI5 may be indicated in this list. The sender of this message may indicate as many messages in this list as can be fit into the message following the Received PSI Message List. Messages are listed by message type in the inverse order of reception, starting with the most recently received message type. If there are more messages than can be indicated in this list, the presence of additional message type(s) shall be indicated at the end of the list.

MESSAGE_TYPE (6 bit field)
This field is the binary representation of the message type (see subclause 11.2.0.1).

PSIX_CHANGE_MARK (2 bit field)
This field is the binary representation of the PSI *change mark* parameter received for a certain PSI message type. Range: 0 to 3.

PSIX_COUNT (4 bit field)

This field is the binary representation of the PSI *count* parameter received for a certain PSI message type. This field indicates the length of the corresponding *Instance bitmap* field and shall be provided only if the corresponding *Instance bitmap* field is provided in the message.
Range: 0 to 7 or 0 to 15, depending on message type.

Instance bitmap (1 – 16 bit field)
This field is a bitmap indicating which instances of a certain message type that are received within a consistent set of PSI messages. This field shall be included when a sub-set of these messages has been received. This field shall not be included when the complete set of these messages has been received.

The most significant bit of this bitmap (bit N) refers to the message instance with the PSI *index* parameter = N–1, where N is the number of instances of the particular message type (PSI *count* + 1). The least significant bit of this bitmap (bit 1) refers to the message instance with the PSI *index* parameter = 0. Each bit position is coded:

0 Message instance is not received;
1 Message instance is received.

ADDITIONAL_MSG_TYPE (1 bit field)
0 No additional message type is present.
1 Additional message type(s) are present.

11.2.18 Packet System Information Type 1

This message is sent by the network on the PBCCH or PACCH giving information for Cell selection, for control of the PRACH, for description of the control channel(s) and optional global power control parameters. This message shall not be segmented across more than one RLC/MAC control block by using the procedures specified in subclause 9.1.11a. Special requirements for the transmission of this message apply on the PBCCH, see GSM 05.02.

Message type: PACKET SYSTEM INFORMATION TYPE 1

Direction: network to mobile station

Classification: distribution message

Table 60: PSI1 information elements

< PSI1 message content > ::=
< **PAGE_MODE** : bit (2) >
< **PBCCH_CHANGE_MARK** : bit (3) >
< **PSI_CHANGE_FIELD** : bit (4) >
< **PSI1_REPEAT_PERIOD** : bit (4) >
< **PSI_COUNT_LR** : bit (6) >
{ 0 | 1 < **PSI_COUNT_HR** : bit (4) > }
< **MEASUREMENT_ORDER**: bit (1) >
< **GPRS Cell Options** : < GPRS Cell Options IE > >
< **PRACH Control Parameters** : < PRACH Control Parameters IE > >
< **PCCCH Organization Parameters** : < PCCCH Organization Parameters IE > >
< **Global Power Control Parameters** : < Global Power Control Parameters IE > >
< **PSI_STATUS_IND** : bit >
< padding bits >
! < Distribution part error : bit (*) = < no string > > ;

Table 61: PSI1 information element details

GPRS Cell Options
This information element is defined in subclause 12.24

Global Power Control Parameters
This information element is defined in subclause 12.9.

MEASUREMENT ORDER (1 bit field)
The MEASUREMENT ORDER field indicates if set = 0 that the mobile station is in control of the cell re-selection in both packet idle mode and packet transfer mode (= NC0 in GSM 05.08) and that the mobile station shall not send any measurement reports to the network (= NC0 and = EM0 in GSM 05.08). It also indicates that the Optional PSI5 message is not broadcast.
If set = 1 the mobile station shall send measurement reports for cell re-selection and/or for extended measurements to the network. Further cell re-selection and measurement details are included in the PSI5 message.

PAGE_MODE (2 bit field)
This field describes which type of page mode used, i.e. either normal paging, extended paging, paging reorganization or same as before from the previous page mode. The mobile station shall ignore this field if the message is received on the PACCH. Coding of this field is defined in GSM 04.08.

PBCCH_CHANGE_MARK (3 bit field)
The PBCCH_CHANGE_MARK field is a 3 bit counter incremented with one each time information has been changed in one or more of the broadcast PSI2-PSIn messages on PBCCH (n>2).

PSI_CHANGE_FIELD (4 bit field)
The PSI_CHANGE_FIELD is a 4 bit value reflecting which PSI message or group of instantiated PSI message was most recent updated when the PBCCH_CHANGE_MARK was last incremented. If more than one PSI message or group of instantiated PSI message were changed at the same time, the PSI_CHANGE_FIELD indicates usnspecified updates. Range 0 to 15.

bit
4 3 2 1

0 0 0 0 Update of unspecified PSI message(s);
0 0 0 1 Unknown
0 0 1 0 PSI2 updated
0 0 1 1 PSI3/PSI3bis updated
0 1 0 0 PSI4 updated
0 1 0 1 PSI5 updated
All other values shall be interpreted as 'Update of unknown SI message type'.

PSI1_REPEAT_PERIOD (4 bit field)
The PSI1_REPEAT_PERIOD field indicates the PSI1 repeat period (see GSM 05.02). The field is coded according to the following table:

bit
4 3 2 1
0 0 0 0 PSI1 repeat period = 1
0 0 0 1 PSI1 repeat period = 2
. . .
1 1 1 1 PSI1 repeat period = 16

PSI_COUNT_LR (6 bit field)
The PSI_COUNT_LR field is a 6 bit value indicating the number of different Packet System Information messages that are mapped onto the PBCCH with low repetition rate (see GSM 05.02).

bit
6 5 4 3 2 1
0 0 0 0 0 0 PSI Count Low Rate = 0
0 0 0 0 0 1 PSI Count Low Rate = 1
. . .
1 1 1 1 1 1 PSI Count Low Rate = 63

PSI_COUNT_HR (4 bit field)
The PSI_COUNT_HR is a 4 bit value indicating the number of different Packet System Information messages that are mapped onto the PBCCH with high repetition rate (see GSM 05.02). The value does not include PSI1, but can include any selected message and all instance of that message. If PSI_COUNT_HR is not included in PSI1, the default value of PSI_COUNT_HR = 0.

bit
4 3 2 1
0 0 0 0 PSI Count High Rate = 1
0 0 0 1 PSI Count High Rate = 2
. . .
1 1 1 1 PSI Count High Rate = 16

PCCCH Organization Parameters
This information element is defined in subclause 12.25

PRACH Control Parameters
This information element is defined in subclause 12.14.

PSI_STATUS_IND (1 bit field):
0 The network does not support the PACKET PSI STATUS message;
1 The network supports the PACKET PSI STATUS message.

11.2.19 Packet System Information Type 2

This message is sent by the network on PBCCH and PACCH giving information of reference frequency lists, cell allocation, GPRS mobile allocations and PCCCH descriptions being used in the cell. Special requirements for the transmission of this message apply on PBCCH, see GSM 05.02.

PSI2 also contains Non-GPRS cell options applicable for non-packet access.

This message shall not be segmented across more than one RLC/MAC control block by using the procedures specified in subclause 9.1.11a. A consistent set of this message type is required to completely decode the information (see 5.5.2.1.4).

Message type: PACKET SYSTEM INFORMATION TYPE 2

Direction: network to mobile station

Classification: distribution message

Table 62: PSI2 information elements

```
< PSI2 message content > ::=
    < PAGE_MODE : bit (2) >
    < PSI2_CHANGE_MARK : bit (2) >
    < PSI2_INDEX : bit (3) >
    < PSI2_COUNT : bit (3) >
    {   { 0 | 1 < Cell Identification : < Cell Identification IE > > }
        { 0 | 1 < Non GPRS Cell Options : < Non GPRS Cell Options IE > > }
        < Reference Frequency Lists : < Reference Frequency Lists struct > >
        < Cell Allocation : < Cell Allocation Lists struct > >
        < GPRS Mobile Allocations : < GPRS Mobile Allocations Lists struct > >
        < PCCCH Description : < PCCCH Description Lists struct > >
        < padding bits > } //       -- truncation at end of message allowed, bits '0' assumed
    ! < Distribution part error : bit (*) = < no string > > ;

< Reference Frequency Lists struct > ::= { 1 < Reference Frequency struct > } ** 0;

< Reference Frequency struct >::=
    < RFL_NUMBER : bit (4) >
    < Length of RFL contents : bit (4) >
    < RFL contents : octet (val(Length of RFL contents) + 3) > ;

< Cell Allocation Lists struct > ::= { 1 < Cell Allocation struct > } ** 0 ;

< Cell Allocation struct > ::=
    < RFL_NUMBER : bit (4) > ;

< GPRS Mobile Allocations Lists struct > ::= { 1 < GPRS Mobile Allocations struct > } ** 0 ;

< GPRS Mobile Allocations struct > ::=
    < MA_NUMBER : bit (4) >
    < GPRS Mobile Allocation : < GPRS Mobile Allocation IE > > ;

< PCCCH Description Lists struct > ::= { 1 < PCCCH Description struct > } ** 0 ;

< PCCCH Description struct > ::=
    < TSC : bit (3) >
    { 0 < Non-hopping PCCCH carriers : < Non-Hopping PCCCH Carriers Lists struct > >
    | 1 < MA_NUMBER : bit (4) >
        < Hopping PCCCH carriers : < Hopping PCCCH Carriers Lists struct > > } ;
< Non-hopping PCCCH Carriers Lists struct > ::= { 1 < Non-Hopping PCCCH Carriers struct > } ** 0 ;
< Non-Hopping PCCCH Carriers struct > ::=
    < ARFCN : bit (10) >
    < TIMESLOT_ALLOCATION : bit (8) > ;

< Hopping PCCCH Carriers Lists struct > ::= { 1< Hopping PCCCH Carriers struct > } ** 0 ;

< Hopping PCCCH Carriers struct > ::=
    < MAIO : bit (6) >
    < TIMESLOT_ALLOCATION : bit (8) > ;
```

Table 63: PSI2 information element details

PAGE_MODE (2 bit field)
This field describes which type of page mode used, i.e. either normal paging, extended paging, paging reorganization or same as before from the previous page mode. The mobile station shall ignore this field if the message is received on the PACCH. Coding of this field is defined in GSM 04.08

PSI2_CHANGE_MARK (2 bit field)
This field is the binary representation of the PSI *change mark* parameter identifying a consistent set of PSI2 messages.
Range: 0 to 3.

PSI2_INDEX (3 bit field) and **PSI2_COUNT** (3 bit field)
These fields are the binary representation of the PSI *index* and PSI *count* parameters associated with the PSI2 message.

Cell Identification
This information element is defined in subclause 12.23. The Cell Identification IE may appear only once in a complete set of PSI2 messages.

Non GPRS Cell Options
This field is defined in subclause 12.27.
This field shall be present in at least one instance of PSI2.**Reference Frequency Lists** (construction)
This construction is the representation of the reference frequency lists provided in an instance of the PSI2 message. An RFL_NUMBER field preceding each reference frequency list (RFL) identifies the RFL.

Cell Allocations (construction)
This construction is a representation of the cell allocation (CA) defined for the cell. The set of radio frequency channels contained in the referenced RFLs in this construction defines the cell allocation.

GPRS Mobile Allocations (construction)
This construction is the representation of the GPRS mobile allocations provided in an instance of the PSI2 message. An MA_NUMBER field preceding each GPRS mobile allocation identifies the GPRS mobile allocation. The receiver shall disregard a GPRS mobile allocation provided in this message that is identified by MA_NUMBER = 14 or 15.

PCCCH Description (construction)
This construction is a representation of the timeslots carrying PCCCH in the cell and their frequency configurations. The preceding training sequence code (TSC) shall be used for each timeslot carrying PCCCH.

The number of timeslots carrying PCCCH in the cell is denoted KC. This is also the implicit value of the parameter BS_PCC_CHANS, see GSM 05.02. The range for KC is 1 to 16 if PBCCH (and PCCCH) is present in the cell. (KC = 0 if PBCCH is not present in the cell.)

The mapping of the PCCCH_GROUPs (numbered from 0 to KCñ1) starts with the lowest numbered PCCCH_GROUP, which is mapped on the lowest numbered timeslot carrying PCCCH on the first (non-hopping or hopping) PCCCH carrier appearing in this construction. The next higher numbered PCCCH_GROUP is mapped on the next (if any) higher numbered timeslot carrying PCCCH on the same carrier, and so on. When all timeslots carrying PCCCH on the first carrier have been used, the next higher numbered PCCCH_GROUP is mapped on the lowest numbered timeslot carrying PCCCH on the next PCCCH carrier appearing in this construction, and so on. The highest numbered PCCCH_GROUP is mapped on the highest numbered timeslot carrying PCCCH on the last PCCCH carrier appearing in this construction.

RFL_NUMBER (4 bit field)
This field is the binary identification of an RFL provided in this message or the binary reference to such.
Range: 0 to 15.

RFL contents (variable length octet string)
This variable length octet string is the representation of a set of radio frequency channels defining an RFL provided in the PSI2 message. The encoding of the octet string is defined by the *value part* of the type 4 information element *Frequency List*, defined in GSM 04.08. The allowed formats of the *Frequency List* information element are the *bit map 0*, *1024 range*, *512 range*, *256 range*, *128 range* and *variable bit map* formats.

MA_NUMBER (4 bit field)
This field is the binary identification of a GPRS Mobile Allocation provided in this message or the binary reference to such.
Range: 0 to 15.

GPRS Mobile Allocation (information element)
The *GPRS Mobile Allocation* information element is defined in subclause 12.10a.

TSC (3 bit field)
This field is the binary representation of the training sequence code, see GSM 05.02.
Range: 0 to 7.

ARFCN (10 bit field)
This field is the binary representation of the absolute radio frequency channel number (ARFCN) defined in GSM 05.05.
Range 0 to 1023.

MAIO (6 bit field)
This field is the binary representation of the mobile allocation index offset (MAIO), see GSM 05.02.
Range: 0 to 63.

PCCCH_TIMESLOT (8 bit field)
This field indicates which timeslot are assigned as PCCCH. This field is coded as TIMESLOT_ALLOCATION information element defined in subclause 12.18.

11.2.19.1 Reference Frequency Lists in PSI2

A Reference Frequency Lists construction may be included in each instance of the PSI2 message. The presence of reference frequency lists (RFLs) is optional. RFLs shall be provided as required for the decoding of GPRS mobile allocations and cell allocation.

11.2.19.2 Cell Allocation in PSI2

A Cell Allocation construction shall not be included in more than one instance of the PSI2 message within the consistent set of PSI2 messages. The presence of a Cell Allocation construction is optional. It shall be provided as required for the decoding of GPRS mobile allocations and for the support of GPRS mobile stations which may access the network in dedicated, group receive and group transmit modes, see GSM 04.08.

11.2.19.3 GPRS Mobile Allocation in PSI2

A GPRS Mobile Allocations construction may be included in each instance of the PSI2 message. The presence of GPRS mobile allocations is optional. The GPRS mobile allocations shall be provided as required for determining the frequency configuration of PDCHs.

11.2.19.4 PCCCH Description

A PCCCH Description construction shall be included in one and only one instance of the PSI2 message within the consistent set of PSI2 messages.

11.2.19.5 Abnormal cases

If the receiver detects any violation against the rules for the appearance of the different constructions defined for this message within the consistent set of this message type, it may regard the contents of these messages as invalid.

11.2.20 Packet System Information Type 3

This message is sent by the network on the PBCCH or PACCH giving information of the BCCH allocation (BA_GPRS) in the neighbour cells and cell selection parameters for serving cell and non-serving cells. This message shall not be segmented across more than one RLC/MAC control block by using the procedures specified in subclause 9.1.11a. Special requirements for the transmission of this message apply on the PBCCH, see GSM 05.02.

Message type: PACKET SYSTEM INFORMATION TYPE 3

Direction: network to mobile station

Classification: distribution message

Table 64: PSI3 information elements

```
< PSI3 message content > ::=
    < PAGE_MODE : bit (2) >
    < PSI3_CHANGE_MARK : bit (2) >
    < PSI3_BIS_COUNT : bit (4) >
    < Serving Cell parameters : < Serving Cell params struct > >
    < General Cell Selection parameter : < Gen Cell Sel struct > >
    < Neighbour Cell parameters : { 1 < Neighbour Cell params struct >  } ** 0 >
    < padding bits >
     ! < Distribution part error : bit (*) = < no string > > ;

< Serving Cell params struct > ::=
    < CELL_BAR_ACCESS_2 : bit >
    < EXC_ACC : bit>
    < GPRS_RXLEV_ACCESS_MIN : bit (6) >
    < GPRS_MS_TXPWR_MAX_CCH : bit (5) >
    { 0 | 1 < HCS Serving Cell parameters : < HCS struct > > }
    < MULTIBAND_REPORTING : bit (2) >;

< HCS struct > ::=
    < PRIORITY_CLASS : bit (3) >
    < HCS_THR : bit (5) > ;

< Gen Cell Sel struct > ::=
    < GPRS_CELL_RESELECT_HYSTERESIS : bit (3) >
    < C31_HYST : bit (1) >
    < C32_QUAL: bit (1) >
    < RANDOM_ACCESS_RETRY : bit (1) >
    { 0 | 1 < T_RESEL : bit (3) > }
    { 0 | 1 < RA_RESELECT_HYSTERESIS : bit (3) > } ;

< Neighbour Cell params struct > ::=
    < START_FREQUENCY : bit (10) >
    < Cell selection params : < Cell Selection struct > >
    < NR_OF_REMAINING_CELLS : bit (4) >
    < FREQ_DIFF_LENGTH : bit (3) >
    {    < FREQUENCY_DIFF : bit (1 + val(FREQ_DIFF_LENGTH)) >
         < Cell Selection Params : <Cell Selection struct>> } * (val(NR_OF_REMAINING_CELLS)) ;

< Cell Selection struct > ::=
    < BSIC : bit (6) >
    < CELL_BAR_ACCESS_2 : bit >
    < EXC_ACC : bit >
    < SAME_RA_AS_SERVING_CELL : bit (1) >
    { 0 | 1  < GPRS_RXLEV_ACCESS_MIN : bit (6) >
         < GPRS_MS_TXPWR_MAX_CCH : bit (5) > }
    { 0 | 1  < GPRS_TEMPORARY_OFFSET : bit (3) >
         < GPRS_PENALTY_TIME : bit (5) > }
    { 0 | 1  < GPRS_RESELECT_OFFSET : bit (5) > }
    { 0 | 1  < HCS params : < HCS struct > > }
    { 0 | 1  < SI13 PBCCH Location : < SI13 PBCCH Location struct > > } ;

< SI13 PBCCH Location struct > ::=
```

```
{ 0 < SI13_LOCATION : bit (1) >
 | 1 < PBCCH_LOCATION : bit (2) >
    < PSI1_REPEAT_PERIOD : bit (4) > } ;
```

Table 65: PSI3 information element details

PAGE_MODE (2 bit field)
This field describes which type of page mode used, i.e. either normal paging, extended paging, paging reorganization or same as before from the previous page mode. The mobile station shall ignore this field if the message is received on the PACCH. Coding of this field is defined in GSM 04.08

PSI3_CHANGE_MARK (2 bit field)
The PSI3 change mark field is changed each time information has been updated in any of the PSI3 or PSI3 bis messages. A new value indicates that the mobile station shall re-read the information from the PSI3 and all PSI3 bis messages. The coding of this field is network dependent.
Range: 0-3.

PSI3_BIS_COUNT (4 bit field)
This field is coded as the binary representation of the PSI3 bis index (in the PSI3 bis message) for the last (highest indexed) individual PSI3 bis message.
Range: 0-15.

Serving Cell Parameters:

CELL_BAR_ACCESS_2 (1 bit field)
This field combines the CELL_BAR_ACCESS and CELL_BAR_QUALIFY parameters and indicates the status for cell reselection, see GSM 05.08:

0 Status for cell reselection is set to *normal*;
1 Status for cell reselection is set to *barred*.

EXC_ACC (1 bit field)
EXC_ACC is used by the network to prevent mobiles from camping on the cell.

0 Status for cell selection and reselection is set to *normal*;
1 The MS is only allowed to camp on the cell for limited service.

GPRS_RXLEV_ACCESS_MIN (6 bit field)
The GPRS_RXLEV_ACCESS_MIN field is coded as the binary representation of the 'RXLEV_ACCESS_MIN' defined in GSM 05.08. It is the minimum received level at the mobile station required for access to the system.

GPRS_MS_TXPWR_MAX_CCH (5 bit field)
The GPRS_MS_TXPWR_MAX_CCH field is coded as the binary representation of the 'power control level' in GSM 05.05 corresponding to the maximum TX power level a mobile station may use when accessing on a packet control channel. This value shall be used by the mobile station according to GSM 05.08.

HCS struct

If the HCS struct is omitted for the serving cell, HCS is not used and the HCS parameters for the other cells shall be neglected i.e the HCS signal strength threshold shall be set to infinity for all cells. Otherwise PRIORITY_CLASS and HCS_THR are defined. The use of the HCS parameters is defined in GSM 05.08.

PRIORITY_CLASS (3 bit field)
The PRIORITY_CLASS field contains the binary representation of the HCS priority for the cell.

bit 3 2 1	
0 0 0	Lowest Priority
... ...	
1 1 1	Highest Priority

HCS_THR (5 bit field)
The HCS_THR is the HCS signal strength threshold

bit 5 4 3 2 1	
0 0 0 0 0	-110 dBm
0 0 0 0 1	-108 dBm
... ...	
1 1 1 1 1	-48 dBm

MULTIBAND_REPORTING (2 bit field)
Binary encoding of multiband reporting parameter as specified in GSM 05.08
Range 0-3.

General Cell Selection Parameters

GPRS_CELL_RESELECT_HYSTERESIS (3 bit field)
The GPRS_CELL_RESELECT_HYSTERESIS field indicates the Additional Hysteresis which applies in Ready state for cells in same RA. This field is encoded according to the following table:

bit 3 2 1	
0 0 0	0 dB
0 0 1	2 dB
0 1 0	4 dB
0 1 1	6 dB
1 0 0	8 dB
1 0 1	10 dB
1 1 0	12 dB
1 1 1	14 dB

C31_HYST (1 bit field)
The C31_HYST field indicates if set to 1 that the GPRS_RESELECT_HYSTERESIS shall be applied to the C31 criterion.

C32_QUAL (1 bit field)
C32_QUAL is a flag indicating an exception rule for GPRS_RESELECT_OFFSET according to GSM 05.08.

RANDOM_ACCESS_RETRY (1 bit field)
The RANDOM_ACCESS_RETRY field indicates if set to 1 that the mobile station is allowed to try to access another cell if available (see subclause 9.4.2).

T_RESEL (3 bit field)
If the mobile station has performed an abnormal release with cell reselection (see subclause 9.4.2) from this cell, the mobile station is not allowed to reselect this cell for T_RESEL seconds if another cell is available. The default value of T_RESEL is 5 seconds. If the field is omitted from the message, the default value shall be used by the mobile station.

bit 3 2 1	
0 0 0	5 seconds
0 0 1	10 seconds
0 1 0	15 seconds
0 1 1	20 seconds
1 0 0	30 seconds
1 0 1	60 seconds
1 1 0	120 seconds
1 1 1	300 seconds

RA_RESELECT_HYSTERESIS (3 bit field)
The RA_RESELECT_HYSTERESIS field indicates in both STANDBY and READY state the additional hysteresis which applies when selecting a cell in a new Routing Area. If this field is not present, the default value is GPRS_CELL_RESELECT_HYSTERESIS. This field is encoded according to the following table:

bit 3 2 1	
0 0 0	0 dB
0 0 1	2 dB

0 1 0	4 dB
0 1 1	6 dB
1 0 0	8 dB
1 0 1	10 dB
1 1 0	12 dB
1 1 1	14 dB

Neighbour Cell Parameters (BA-GPRS)
The Neighbour cell parameters (BA-GPRS) are specified in PSI3 and in at least one instance of PSI3bis. BA-GPRS is used to specify one or several groups of neighbouring cells and their corresponding cell selection parameters. Preferably cells with several common cell selection parameters can be grouped together. If one instance of PSI3bis is not sufficient to specify the cell selection parameters of all neighbouring cells, the remaining frequency groups are specified in consecutive instances of PSI3bis. If all information fits within the PSI3 message, one instance of PSI3bis without any neighbour cell parameters is broadcast.

Each neighbour cell listed in PSI3 and in one or more instances of PSI3bis is assigned an ascending index used for measurement reports. The first neighbour cell in PSI3 has the lowest index (= 0), and the last neighbour cell in the highest indexed PSI3bis message has the highest index. The total number of neighbour cells in the BA-GPRS shall not exceed 32. If a mobile station receives more than 32 cells in the BA-GPRS, only the 32 cells with the lowest indexes shall be considered.

START_FREQUENCY (10 bit field)
The START_FREQUENCY defines the ARFCN for the first carrier in the list (ARFCN(0)).

FREQ_DIFF_LENGTH (3 bit field)
This field is required to calculate the number of bits to be used for the FREQUENCY_DIFF field in the current frequency group.

FREQUENCY_DIFF (1+val(FREQ_DIFF_LENGTH) bit field)
Each FREQUENCY_DIFF parameter field specifies the difference in frequency to the next carrier to be defined. The FREQUENCY_DIFF parameter encodes a non negative integer in binary format (W).

Each frequency following the start frequency (ARFCN(0)) and belonging to the Frequency List struct is then calculated by the formula ARFCN(n) = (ARFCN(n-1) + W(n)) modulus 1024, n=1, . . ., val(NR_OF_REMAINING_CELLS.

General rules for handling neigbour cell parameter default values

The first neighbour cell defined in PSI3 uses as its default parameter values the parameter values defined for the serving cell. The following neighbour cells use the parameter values of the previous neighbour cell as their default values.

Cell Selection params
The first field of the Cell Selection struct, *BSIC*, defines the BSIC of the cell and then comes the fields CELL_BAR_ACCESS_2, ECX_ACC and SAME_RA_AS_SERVING_CELL. Then follows none, some, or all of the fields GPRS_RXLEV_ACCESS_MIN, GPRS_MS_TXPWR_MAX_CCH, GPRS_TEMPORARY_OFFSET, GPRS_PENALTY_TIME, GPRS_RESELECT_OFFSET , HCS params, SI13_PBCCH_LOCATION, PCCH_TYPE and PSI1_REPEAT_PERIOD. If fields are omitted, the values for these parameters are the same as for the preceding cell unless otherwise specified for the parameter.

BSIC (6 bit field)
The BSIC field is coded as the 'Base Station Identity Code' defined in GSM 03.03. One BSIC for each carrier in BA(GPRS) is defined.

CELL_BAR_ACCESS_2 (1 bit field)
EXC_ACC (1 bit field)
For definition see Serving Cell parameters

SAME_RA_AS_SERVING_CELL (1 bit field)
The same RA as serving cell field contains one bit, set to
0 if the cell is in a Routeing Area different from the serving cell, or
1 if the cell is in the same Routeing Area as the serving cell.

GPRS_TEMPORARY_OFFSET (3 bit field)
The GPRS_TEMPORARY_OFFSET field indicates the negative offset to C32 that the mobile station shall use for duration of GPRS_PENALTY_TIME. It is used by the mobile station as part of its calculation of C32 for the cell

reselection process.

bit
3 2 1
0 0 0 0 dB
0 0 1 10 dB
0 1 0 20 dB
0 1 1 30 dB
1 0 0 40 dB
1 0 1 50 dB
1 1 0 60 dB
1 1 1 infinity

GPRS_PENALTY_TIME (5 bit field)
The GPRS_PENALTY_TIME defines the length of time for which GPRS_TEMPORARY_OFFSET is active.

bit
5 4 3 2 1
0 0 0 0 0 10 seconds
0 0 0 0 1 20 seconds
. . .
1 1 1 1 1 320 seconds

GPRS_RESELECT_OFFSET (5 bit field)
GPRS_RESELECT_OFFSET is used by the mobile station to apply a positive or negative offset and a hysteresis to the GPRS cell reselection criterion. Default value is 0 dB. If the field is omitted from the message, the default value shall be used by the mobile station.

bit
5 4 3 2 1
0 0 0 0 0 -52 dB
0 0 0 0 1 -48 dB
...
0 1 0 1 0 -12 dB
0 1 0 1 1 -10 dB
...
1 0 1 1 0 +12 dB
1 0 1 1 1 +16 dB
...
1 1 1 1 1 +48 dB

SI13_PBCCH_LOCATION construction

The optional SI13_PBCCH_LOCATION struct may either indicate the position of the SI13 message or a PBCCH position. If not included, SI3 and SI4 in the neighbour cell indicates if the neighbour cell supports GPRS.

SI13_LOCATION (1 bit field)
The SI13_LOCATION field, if present, indicates the logical channel where the SYSTEM INFORMATION TYPE 13 is broadcast (see GSM 05.02).

0 SYSTEM INFORMATION TYPE 13 message is sent on BCCH norm
1 SYSTEM INFORMATION TYPE 13 message is sent on BCCH ext

PBCCH_LOCATION (2 bit field)
The PBCCH_LOCATION field, if present, indicates the location of the PBCCH on the BCCH carrier (see GSM 05.02).

bit
2 1
0 0 PBCCH on TN 1 of BCCH carrier
0 1 PBCCH on TN 2 of BCCH carrier
1 0 PBCCH on TN 3 of BCCH carrier
1 1 PBCCH on TN 4 of BCCH carrier

PSI1_REPEAT_PERIOD (4 bit field)

The PSI1_REPEAT_PERIOD field indicates the PSI repeat period. The field is coded according to the following table:

bit 4 3 2 1	
0 0 0 0	PSI1 repeat period = 1
0 0 0 1	PSI1 repeat period = 2
...	
1 1 1 1	PSI1 repeat period = 16

11.2.21 Packet System Information Type 3 bis

This message is sent by the network on the PBCCH and PACCH giving information of the BCCH allocation in the neighbour cells and cell selection parameters for non-serving cells. This message shall not be segmented across more than one RLC/MAC control block by using the procedures specified in subclause 9.1.11a. If not all information fits into one instance of the PSI3bis message, the PSI3bis message can be repeated. Special requirements for the transmission of this message apply on PBCCH, see GSM 05.02.

Message type: PACKET SYSTEM INFORMATION TYPE 3 BIS

Direction: network to mobile station

Classification: distribution message

Table 66: PSI3 bis information elements

```
< PSI3 bis message content > ::=
    < PAGE_MODE : bit (2) >
    < PSI3_CHANGE_MARK : bit (2) >
    < PSI3_BIS_INDEX : bit (4) >
    < PSI3_BIS_COUNT : bit (4) >
    {   < Neighbour cell parameters : { 1 < Neighbour cell params struct > } ** 0 >
        < Neighbour Cell parameters 2 : { 1 < Neighbour Cell params 2 struct > } ** 0 >
                        -- may be repeated many times
        < padding bits > } //       -- truncation at end of message allowed, bits '0' assumed
     ! < Distribution part error : bit (*) = < no string > > ;

< Neighbour cell params struct > ::=
    < START_FREQUENCY : bit (10) >
    < Cell selection params : < Cell Selection struct > >
    < NR_OF_REMAINING_CELLS : bit (4) >
    < FREQ_DIFF_LENGTH : bit (3) >
    {   < FREQUENCY_DIFF : bit (1 + val(FREQ_DIFF_LENGTH)) >
        < Cell selection params : <Cell Selection struct> > } * (val(NR_OF_REMAINING_CELLS)) ;

< Cell Selection struct > ::=
    < BSIC : bit (6) >
    < CELL_BAR_ACCESS_2 : bit >
    < EXC_ACC : bit >
    < SAME_RA_AS_SERVING_CELL : bit (1) >
    { 0 | 1  < GPRS_RXLEV_ACCESS_MIN : bit (6) >
             < GPRS_MS_TXPWR_MAX_CCH : bit (5) > }
    { 0 | 1  < GPRS_TEMPORARY_OFFSET : bit (3) >
             < GPRS_PENALTY_TIME : bit (5) > }
    { 0 | 1  < GPRS_RESELECT_OFFSET : bit (5) > }
    { 0 | 1  < HCS params : < HCS struct > > }
    { 0 | 1  < SI13_PBCCH_LOCATION : < SI13_PBCCH_LOCATION struct > > } ;

< SI13_PBCCH_LOCATION struct > ::=
    { 0 < SI13_LOCATION : bit (1) >
    | 1 < PBCCH_LOCATION : bit (2) >
        < PSI1_REPEAT_PERIOD : bit (4) > } ;

< HCS struct > ::=
    < PRIORITY_CLASS : bit (3) >
    < HCS_THR : bit (5) > ;
< Neighbour Cell params 2 struct > ::=
    < GENERATION : bit (2) >
    { 1
        { 1 < START_FREQUENCY : bit (10) >          -- multiple START FREQ/FREQ DIFF sets
                                                    -- may be defined
            < SAME_RA_AS_SERVING_CELL : bit (1) >
            < CELL_BAR_ACCESS_2 : bit >
            < BCC : bit (3) >
            < NR_OF_REMAINING_CELLS : bit (4) >
                                -- if val(NR_OF_REMAINING_CELLS)=0
                                --then the CELL_PARAMS_POINTER
```

```
                                    -- follows immediately
            < FREQ_DIFF_LENGTH : bit (3) >
            {   < FREQUENCY_DIFF : bit (1 + val(FREQ_DIFF_LENGTH)) >
                < SAME_RA_AS_SERVING_CELL : bit (1) >
                < CELL_BAR_ACCESS_2 : bit >
                < BCC : bit (3) > } * (val(NR_OF_REMAINING_CELLS)) } ** 0
        < CELL_PARAMS_POINTER : bit (2) > } ** 0 --up to four pointers to the parameter set
    < Neighbour parameter set : < Neighbour parameter set struct > > *
        (1 + max(val(CELL_PARAMS_POINTER))) ;

< Neighbour parameter set struct > ::=          -- the first zero indicates that default parameter value(s)
                                                -- are used.
    { 0 | 1 < NCC : bit (3) > }
    < EXC_ACC : bit >
    { 0 | 1 < GPRS_RXLEV_ACCESS_MIN : bit (6) > }
    { 0 | 1 < GPRS_MS_TXPWR_MAX_CCH : bit (5) > }
    { 0 | 1 < PRIORITY_CLASS : bit (3) > }
    { 0 | 1 < HCS_THR : bit (5) >}
    { 0 | 1 < SI13_PBCCH_LOCATION : SI13_PBCCH_LOCATION struct > }
    < GPRS_TEMPORARY_OFFSET : bit (3) >
    < GPRS_PENALTY_TIME : bit (5) >
    < GPRS_RESELECT_OFFSET : bit (5) > ;
```

Table 67: PSI3 bis information element details

PAGE_MODE (2 bit field)
See description under PSI3.

PSI3_CHANGE_MARK (2 bit field)
See description under PSI3.

PSI3_BIS_INDEX (4 bit field)
The PSI3_BIS_INDEX field is used to distinguish individual PSI3 bis messages containing information about different neighbour cells. The field can take the binary representation of the values 0 to n, where n is the index of the last PSI3 bis message. (PSI3 bis count).

PSI3_BIS_COUNT (4 bit field)
See description under PSI3.

General rules for handling neighbour cell parameter default values

The first neighbour cell defined in the first PSI3bis instance uses as its default parameter values the parameter values defined for the last neighbour cell in PSI3.
The following neighbour cells in PSI3bis use the parameter values of the previous neighbour cell as their default values.
This principle of referring to the previous cell applies independently of the coding used in PSI3bis (Neighbour cell parameters and Neighbour cell parameters 2).
This principle also applies when going from PSI3bis instance i over to PSI3bis instance i+1.

Neighbour cell params struct
The coding of the Neighbour cell parameters is described under PSI3.

Neighbour cell params struct 2
This coding may be used if the number of neighbour cells is high and many cells share common parameter values. The structure contains pointers to the list of sets of actual parameters.

GENERATION (2 bit field)
Reserved for future extension. The sender shall use 00. The receiver: if received different from 00 discard the structure.

CELL_PARAMS_POINTER (2 bit field)
Pointer to the parameter set valid for a certain cell group (up to four).

BCC (3 bit field)
BTS Colour Code.

Neighbour parameter set struct

The actual parameter values are given is this structure.

NCC : bit (3). Network Colour Code. The default value is given by the serving cell.
GPRS_RXLEV_ACCESS_MIN : bit (6).
GPRS_MS_TXPWR_MAX_CCH : bit (5).
PRIORITY_CLASS : bit (3).
HCS_THR : bit (5).

11.2.22 Packet System Information Type 4

This message is optionally sent by the network on the PBCCH and PACCH giving information directing the mobile station to make interference measurements. This message shall not be segmented across more than one RLC/MAC control block by using the procedures specified in subclause 9.1.11a. Special requirements for the transmission of this message apply on PBCCH, see GSM 05.02.

Message type: PACKET SYSTEM INFORMATION TYPE 4

Direction: network to mobile station

Classification: distribution message

Table 68: PSI4 information elements

```
< PSI4 message content > ::=
    < PAGE_MODE : bit (2) >
    < PSI4_CHANGE_MARK : bit (2) >
    < PSI4_INDEX : bit (3) >
    < PSI4_COUNT : bit (3) >
    < INT_MEAS_CHANNEL_LIST: < Channel List struct > >
    < padding bits >
     ! < Distribution part error : bit (*) = < no string > > ;

< Channel List struct > ::=
    < Channel group struct >
    { 1 < Channel group struct > } ** 0 ;

< Channel Group struct > ::=
    { 0 < ARFCN : bit (10) >
    | 1 < MA_NUMBER : bit (4) >
        < MAIO : bit (6) > }
    < TIMESLOT_ALLOCATION : bit (8) > ;
```

Table 69: PSI4 information element details

The PSI4 message is optional and is only sent if indicated by the Power Control parameter INT_MEAS_CHANNEL_LIST_AVAIL (see subclause 12.9).

Depending on the size of the list more than one PSI4 messages can be required to broadcast the total list. The PSI4 count parameter therefore indicates the last (highest indexed) PSI4 message. The sequence number of each PSI4 message is then indicated by the Message Sequence number parameter.

The PSI4 message contains a list of channels which shall be used by the mobile station for interference measurements in packet idle mode (se GSM 05.08). The channel list is defined by a Channel list struct which contains one or more Channel Group struct. The Channel Group struct can have two alternative coding formats, the MA format or the ARFCN format. The MA format shall be used for frequency hopping physical channels. At maximum 32 Channel Group structs may be defined, and of these at maximum 4 Channel Group structs may be defined in MA format.

Using the MA format, a set of hopping physical channels may be defined. The definition comprises a mobile allocation specified in the PSI2 message and referenced by the MA_NUMBER value, a MAIO value and a TIMESLOT_ALLOCATION bit map.

Using the ARFCN format, a set of non-hopping physical channels may be defined by a ARFCN value, identifying the

radio frequency, and a TIMESLOT_ALLOCATION bit map.

PSI4_CHANGE_MARK (2 bit field)
The PSI4 change mark field is changed each time information has been updated in any of the individual PSI4 messages. A new value indicates that the mobile station shall re-read the information from all PSI4 messages. The coding of this field is network dependent.
Range: 0 - 3.

PAGE_MODE (2 bit field)
This field is defined in clause 12.20.

PSI4_COUNT (3 bit field)
The PSI4 count field is coded as the binary representation of the last (highest indexed) individual PSI4 message.
Range: 0 - 7.

PSI4_INDEX (3 bit field)
The PSI4 index field is used to distinguish individual PSI4 messages. The field can take the binary representation of the values 0 to n, where n is the index of the last PSI4 message. (PSI4 count).
Range: 0 - 7.

ARFCN (Absolute RF channel number) (10 bit field)
The ARFCN is coded as the binary representation of the absolute RF channel number (see GSM 05.05).
Range: 0 to 1023.

MA_NUMBER (4 bit field)
The purpose of the MA_NUMBER field is to refer to a mobile allocation and a corresponding HSN value defined in the PSI2 message for the decoding of a physical channel description. The MA_NUMBER field is binary coded.
Range: 0 - 15.

MAIO (Mobile allocation index offset) (6 bit field)
The MAIO field is coded as the binary representation of the mobile allocation index offset as defined in GSM 05.02.
Range: 0 to 63.

TIMESLOT_ALLOCATION (8 bit field)
This field is defined in subclause 12.18.

11.2.23 Packet System Information Type 5

This optional message is sent by the network on the PBCCH giving information for measurement reporting and network controlled cell reselection. If not all information fits into one message, the remaining information will be sent in other instances of the PSI5 message. The message is sent on PBCCH only if so indicated in PSI1.

Message type: PACKET SYSTEM INFORMATION TYPE 5

Direction: network to mobile station

Classification: distribution message

Table 70: PSI5 information elements

```
< PSI5 message content > ::=
    < PAGE_MODE : bit (2) >
    < PSI5_CHANGE_MARK : bit (2) >
    < PSI5_INDEX : bit (3) >
    < PSI5_COUNT : bit (3) >
    { 0 | 1 < NC Measurement Parameters : < NC Measurement Parameters struct > > }
    { 0 | 1 < EXT Measurement Parameters : < EXT Measurement Parameters struct > > }
    < padding bits >
     ! < Distribution part error : bit (*) = < no string > > ;

< NC Measurement Parameters struct > ::=
    < NETWORK_CONTROL_ORDER : bit (2) >
    { 0 | 1 < NC_ NON_DRX_PERIOD : bit (3) >
            < NC_REPORTING_PERIOD_I : bit (3) >
            < NC_REPORTING_PERIOD_T : bit (3) > } ;

< EXT Measurement Parameters struct >::=
    {   < EXT_MEASUREMENT_ORDER : bit (2) == 00 >      < no string >
    |   < EXT_MEASUREMENT_ORDER : bit (2) == 01 >      < EM1 struct >
    |   < EXT_MEASUREMENT_ORDER : bit (2) == 10 >      < no string >
    |   < EXT_MEASUREMENT_ORDER : bit (2) == 11 >      < no string > } ;

< EM1 struct > ::=
    { 0 | 1 < EXT_REPORTING_TYPE: bit (2) == 00 >      < no string >
    |       < EXT_REPORTING_TYPE: bit (2) == 01 >      < NCC_PERMITTED : bit (8) >
    |       < EXT_REPORTING_TYPE: bit (2) == 10 >      { 0 | 1 < INT_FREQUENCY : bit (5) > }
    |       < EXT_REPORTING_TYPE: bit (2) == 11 >      < no string > }
    { 0 | 1 < EXT_REPORTING_PERIOD : bit (3) >}
    { < EXT_FREQUENCY_LIST : < EXT Frequency list description struct > > } ;

< EXT Frequency List Description struct > ::=
     < EXT Frequency List struct > { 1 < EXT Frequency List struct > } ** 0 ;

< EXT Frequency List struct > ::=
    {   < START_FREQUENCY : bit (10) >
        < NR_OF_FREQUENCIES : bit (5) >
        < FREQ_DIFF_LENGTH : bit (3) >
        { < FREQUENCY_DIFF : bit (val(FREQ_DIFF_LENGTH)) > } * (val(NR_OF_FREQUENCIES))};
```

Table 71: PSI5 information element details

The optional PSI5 message contains broadcast measurement parameters for either Network Control (NC) measurements containing the NC Measurement Parameters, or for Extended measurements containing the EXT Measurement Parameters, or for both. If included, the NC Measurement parameters struct shall only exist in one instance of the PSI5 message. If the NC Measurement parameters struct is included in more than one instance, the value of the struct in the instance with the highest index shall be valid and all others shall be ignored.

The 'EXT measurement parameters struct' contains the EXT Measurement Order, the EXT parameters and one or more EXT Frequency List structs. If the value of the EXT Measurement Order or any of the EXT parameters differs between instances of the PSI5 message, the value of the parameter in the instance with the highest index shall be valid and all

others shall be ignored.

PAGE_MODE (2 bit field)
This field is defined in clause 12.20.

PSI5_CHANGE_MARK (2 bit field)
The PSI5_CHANGE_MARK field is changed each time information has been updated in any of the individual instances of the PSI5 message. A new value indicates that the mobile station shall re-read the information from all PSI5 messages. The coding of this field is network dependent.
Range: 0 to 3.

PSI5_INDEX (3 bit field) and **PSI5_COUNT** (3 bit field)
The purpose of the PSI5_INDEX field and the PSI5_COUNT field is to indicate the number of individual messages within the sequence of PSI5 messages and to assign an index to identify each one of them. The PSI5_INDEX field is binary coded, range: 0 to 7, and provides an index to identify the individual PSI5 message. The PSI5_COUNT field is binary coded, range: 0 to 7, and provides the PSI5_INDEX value for the last (highest indexed) message in the sequence of PSI5 messages.

NETWORK_CONTROL_ORDER (2 bit field)
The NETWORK_CONTROL_ORDER field is coded according to the following table (for definition of NCx see GSM 05.08):

bit 2 1	
0 0	NC0
0 1	NC1
1 0	NC2
1 1	Reserved

If the NETWORK_CONTROL_ORDER parameter = NC0, then the other parameters in the NC Measurement parameters struct may be omitted. If the NETWORK_CONTROL_ORDER parameter indicates NC1 or NC2 and the other parameters are omitted, the default value for these parameters shall be assumed.

NC_NON_DRX_PERIOD (3 bit field)
This field indicates the minimum time the mobile station shall stay in non-DRX mode after an NC-measurement report has been sent. The field is coded according to the following table:

bit 3 2 1	
0 0 0	No non-DRX mode after a measurement report has been sent.
0 0 1	0,24 sec
0 1 0	0,48 sec *(default value)*
0 1 1	0,72 sec
1 0 0	0,96 sec
1 0 1	1,20 sec
1 1 0	1,44 sec
1 1 1	1,92 sec

NC_REPORTING_PERIOD_I (3 bit field)
NC_REPORTING_PERIOD_T (3 bit field)
These fields indicate the time period for cell reselection measurement reporting for packet idle mode (I) and packet transfer mode (T), respectively. The field is coded according to the following table:

bit 3 2 1	
0 0 0	0.48 sec
0 0 1	0.96 sec
0 1 0	1.92 sec
0 1 1	3.84 sec *(default value for NC_REPORTING_PERIOD_T)*
1 0 0	7.68 sec
1 0 1	15.36 sec
1 1 0	30.72 sec
1 1 1	61.44 sec *(default value for NC_REPORTING_PERIOD_I)*

EXT Measurements

The 'EXT Measurements Parameters' can be repeated in a sequence of PSI5 message instances where each message instance can contain a sub-list of frequency (ARFCN) parameters. The sub-lists shall be concatenated into a resulting frequency list in order of ascending PSI5 message instances. Each added frequency position in the resulting frequency list shall then be assigned an ascending index used for measurement reports. If the same frequency is defined more than once in the resulting list, each occurrence will get en index, but measurements shall only be performed and reported for the last added position.

EXT_MEASUREMENT_ORDER (2 bit field)
The EXT_MEASUREMENT_ORDER field indicates to the mobile station how to interpret the rest of the extended measurement parameters. This field is coded according to the following table (for definition of EMx, see 05.08):

bit 2 1	
0 0	EM0
0 1	EM1
1 0	Reserved.
1 1	Reserved and shall be interpreted as EM0 by the receiver.

If the EXT_MEASUREMENT_ORDER parameter = EM1 the optional parameters in the EM1 struct may be included in at least one instance of the message. If a field is included in more than one instance, the value of the field in the instance with the highest index shall be valid and all others shall be ignored.

NCC_PERMITTED (8 bit field)

This field is a bitmap of NCCs for which the mobile station is permitted to report measurement; this bitmap relates to NCC part of BSIC (see coding field in 04.08).

EXT_REPORTING_TYPE (2 bit field)
This field indicates the type of extended measurement reporting to which the frequencies on the list are subject. This field is coded according to the following table (see GSM 05.08):

bit 2 1	
0 0	Type 1 measurement reporting *(default value for EXT_REPORTING_TYPE)*
0 1	Type 2 measurement reporting
1 0	Type 3 measurement reporting
1 1	Reserved. In this version of the protocol the mobile station shall ignore the entire list containing this field.

EXT_REPORTING_PERIOD (3 bit field)
The EXT_REPORTING_PERIOD field indicates the time interval between extended measurement reports. This field is coded according to the following table:

bit 3 2 1	
0 0 0	60 sec
0 0 1	120 sec
0 1 0	240 sec
0 1 1	480 sec
1 0 0	960 sec
1 0 1	1920 sec *(default value for EXT_REPORTING_PERIOD*
1 1 0	3840 sec
1 1 1	7680 sec

INT_FREQUENCY (5 bit field)
This optional field indicates the frequency upon which the interference measurement shall be made. This field is an index into the EXT Frequency List. If the field is not included in any instance of the message, no interference measurements shall be done.
Range 0 to 31

EXT_FREQUENCY_LIST
Contains the EXT Frequency List description struct. The EXT Frequency Lists description struct may contain multiple

EXT frequency list struct.

START_FREQUENCY (10 bit field)
The START_FREQUENCY defines the ARFCN for the first carrier in the list (ARFCN(0)).

FREQ_DIFF_LENGTH (3 bit field)
This field is required to calculate the number of bits to be used for the FREQUENCY_DIFF field in the current frequency group.

FREQUENCY_DIFF (1+val(FREQ_DIFF_LENGTH) bit field)
Each FREQUENCY_DIFF parameter field specifies the difference in frequency to the next carrier to be defined. The FREQUENCY_DIFF parameter encodes a non negative integer in binary format (W). Each frequency following the start frequency (ARFCN(0)) and belonging to the Frequency List struct is then calculated by the formula ARFCN(n) = (ARFCN(n-1) + W(n)) modulus 1024, n=1, . . ., val(NR_OF_FREQUENCIES.

11.2.24 Spare

11.2.25 Packet System Information 13

This message may be broadcast by the network on the PACCH (see subclause 5.5.2.1). The message provides the mobile station with GPRS cell specific access-related information. The information in this message shall be the same as provided in the SI13 message on BCCH, see GSM 04.08.

Message type: PACKET SYSTEM INFORMATION TYPE 13

Direction: network to mobile station

Classification: distribution message

Table 72: PSI13 information elements

```
< PSI13 message content > ::=
    < PAGE_MODE : bit (2) >
    < BCCH_CHANGE_MARK : bit (3) >
    < SI_CHANGE_FIELD : bit (4) >
    { 0 | 1  < SI13_CHANGE_MARK : bit (2) >
             < GPRS Mobile Allocation : < GPRS Mobile Allocation IE > > }
    { 0                          -- PBCCH not present in cell :
        < RAC : bit (8) >
        < SPGC_CCCH_SUP : bit >
        < PRIORITY_ACCESS_THR : bit (3) >
        < NETWORK_CONTROL_ORDER : bit (2) >
        < GPRS Cell Options : < GPRS Cell Options IE > >
        < GPRS Power Control Parameters : < GPRS Power Control Parameters struct > >
    | 1                          -- PBCCH present in cell :
        < PSI1_REPEAT_PERIOD : bit (4) >
        < PBCCH Description : < PBCCH Description struct > > }
    < padding bits >
     ! < Distribution part error : bit (*) = < no string > > ;

< GPRS Power Control Parameters struct > ::=
    < ALPHA : bit (4) >
    < T_AVG_W : bit (5) >
    < T_AVG_T : bit (5) >
    < PC_MEAS_CHAN : bit >
    < N_AVG_I : bit (4) > ;

< PBCCH Description struct > ::=
    < Pb : bit (4) >
    < TSC : bit (3) >
    < TN : bit (3) >
    { 0  -- default to BCCH carrier
    | 10     < ARFCN : bit (10) >
    | 11     < MAIO : bit (6) > } ;
```

Table 73: PSI13 information element details

PAGE_MODE (2 bit field)
This field describes which type of page mode used, i.e. either normal paging, extended paging, paging reorganization or same as before from the previous page mode. The mobile station shall ignore this field if the message is received on the PACCH. Coding of this field is defined in GSM 04.08.

BCCH_CHANGE_MARK (3 bit field)
This field indicates the status of the information on BCCH. The value of this field shall be changed each time the information on BCCH, except for the contents of the SI-13 message, is changed.

SI_CHANGE_FIELD (4 bit field)
This field is the binary representation of which information was changed at the last indication in BCCH_CHANGE_MARK. Range 0 to 15:

bit
4 3 2 1

0 0 0 0 Update of *unspecified* SI message or SI messages;
0 0 0 1 Update of SI1 message;
0 0 1 0 Update of SI2, SI2 bis or SI2 ter message;
0 0 1 1 Update of SI3, SI4, SI7 or SI8 message;
0 1 0 0 Update of SI9 message;
All other values shall be interpreted as 'update of unknown SI message type'.

SI13_CHANGE_MARK (2 bit field)
This field is the binary representation of the SI change mark identifying the GPRS Mobile Allocation provided in SI13 and PSI13 messages.
Range: 0 to 3.

GPRS Mobile Allocation (information element)
This information element is the representation of the GPRS mobile allocation provided in SI13 and PSI13 messages. It is identified by MA_NUMBER = 14 when referenced from a packet assignment message. When used in SI13 or PSI13 message, this information element shall refer to the cell allocation defined for the cell in SI1 or PSI2.

RAC (8 bit field)
This field is the binary representation of the Routing Area Code, see GSM 03.03.

SPGC_CCCH_SUP (bit field)
This field indicates the support of the parameter SPLIT_PG_CYCLE on CCCH from the network side:

0 SPLIT_PG_CYCLE is not supported on CCCH in this cell;
1 SPLIT_PG_CYCLE is supported on CCCH in this cell.

The **PRIORITY_ACCESS_THR** field (3 bit) is the binary representation of the parameter PRIORITY_ACCESS_THR:

bit
3 2 1
0 0 0 packet access is not allowed in the cell;
0 0 1 spare, shall be interpreted as '000' (packet access not allowed);
0 1 0 spare, shall be interpreted as '000' (packet access not allowed);
0 1 1 packet access is allowed for priority level 1;
1 0 0 packet access is allowed for priority level 1 to 2;
1 0 1 packet access is allowed for priority level 1 to 3;
1 1 0 packet access is allowed for priority level 1 to 4;
1 1 1 spare, shall be interpreted as '110' (packet access allowed).

The **NETWORK_CONTROL_ORDER** field (2 bit) is the binary representation of the parameter NETWORK_CONTROL_ORDER, see GSM 05.08:

bit
2 1
0 0 NC0: MS controlled cell re-selection, no measurement reporting.
0 1 NC1: MS controlled cell re-selection, MS sends measurement reports.
1 0 NC2: Network controlled cell re-selection, MS sends measurement reports.
1 1 Reserved for future use, interpreted as NC0 by mobile station.

GPRS Cell Options (information element)
The *GPRS Cell Option* information element is defined in subclause 12.24.

PSI1_REPEAT_PERIOD (4 bit field)
This field is the representation of the PSI1 repeat period. The field is coded according to the following table:

bit
4 3 2 1
0 0 0 0 PSI1 repeat period = 1 multiframe
0 0 0 1 PSI1 repeat period = 2 multiframes
:
1 1 1 1 PSI1 repeat period = 16 multiframes

GPRS Power Control Parameters struct

ALPHA (4 bit field)
For encoding and description see the Global Power Control Parameters IE.

T_AVG_W (5 bit field)
For encoding and description see the Global Power Control Parameters IE.

T_AVG_T (5 bit field)
For encoding and description see the Global Power Control Parameters IE.

PC_MEAS_CHAN (1 bit field)
For encoding and description see the Global Power Control Parameters IE.

N_AVG_I (4 bit field)
For encoding and description see the Global Power Control Parameters IE.

PBCCH Description struct
The PBCCH description struct provides the channel description for the PBCCH. The frequency description for the PBCCH may be specified by an ARFCN (non-hopping radio frequency channel) or a MAIO (hopping radio frequency channel) field. In case of a hopping radio frequency channel, the PBCCH shall use the GPRS mobile allocation specified in this message. If none of the ARFCN or MAIO fields are present, the PBCCH shall use the BCCH carrier.

Pb (4 bit field)
For encoding and description see the Global Power Control Parameters IE.

TSC (3 bit field)
This field is the binary representation of the training sequence code used for PBCCH and PCCCHs.
Range: 0 to 7.

TN (3 bit field)
This field is the binary representation of the timeslot number for the PBCCH and the corresponding PCCCH.
Range: 0 to 7.

ARFCN (10 bit field)
This field is the binary representation of the absolute RF channel number.
Range: 0 to 1023.

MAIO (6 bit field)
This field is the binary representation of the mobile allocation index offset.
Range: 0 to 63.

11.2.26 Packet TBF Release

This message is sent on the PACCH by the network to the mobile station to initiate release of an uplink or downlink TBF.

Message type: PACKET TBF RELEASE

Direction: network to mobile station

Classification: non-distribution message

Table 74: PACKET TBF RELEASE information elements

```
< Packet TBF Release message content > ::=
    < PAGE_MODE : bit (2) >
    {   0 < GLOBAL_TFI : Global TFI IE >
        {   < UPLINK_RELEASE : bit (1) >
            < DOWNLINK_RELEASE : bit (1) >
            < TBF_RELEASE_CAUSE : bit (4)  = { 0000 | 0010 } >
            < padding bits >
            ! < Non-distribution part error : bit (*) = < no string > > }
        ! < Address information part error : bit (*) = < no string > > }
    ! < Distribution part error : bit (*) = < no string > > ;
```

Table 75: PACKET TBF RELEASE information element details

PAGE_MODE (2 bit field)
This field is defined in clause 12.20.

Global TFI IE
This information element contains the TFI of the mobile station's which uplink and/or downlink TBF to be released.
This field is defined in clause 12.10.

Uplink_Release (1 bit field)
Downlink_Release (1 bit field)
These fields indicate which TBF shall be release, uplink or downlink. Both directions can be released at the same time.

0 TBF shall not be released
1 TBF shall be released

TBF_RELEASE_CAUSE (8 bit field)
This field indicates the reason for the release of the TBF. This field is encoded according to the following table:

bit 4 3 2 1	
0 0 0 0	Normal release
0 0 1 0	Abnormal release

All other values are reserved, the same behaviour in reception as if 'Abnormal release'.

11.2.27 Spare

11.2.28 Packet Uplink Ack/Nack

This message is sent on the PACCH by the network to the mobile station indicate the status of the received RLC data blocks. This message may also update the timing advance and power control parameters. A fixed allocation mobile station may also be assigned uplink resources.

Message type: PACKET UPLINK ACK/NACK

Direction: network to mobile station

Classification: non-distribution message

Table 76: PACKET UPLINK ACK/NACK information elements

```
< Packet Uplink Ack/Nack message content > ::=
    < PAGE MODE : bit (2) >
    {   00 < UPLINK_TFI : bit (5) >
        { 0     -- Message escape
            {   < CHANNEL_CODING_COMMAND : bit (2) >
                < Ack/Nack Description : < Ack/Nack Description IE > >
                { 0 | 1  < CONTENTION_RESOLUTION_TLLI : bit (32) > }
                { 0 | 1  < Packet Timing Advance : < Packet Timing Advance IE > > }
                { 0 | 1  < Power Control Parameters : < Power Control Parameters IE > > }
                { 0 | 1  < Extension Bits : Extension Bits IE > }              -- subclause 12.26
                { 0 | 1  < Fixed Allocation Parameters : < Fixed Allocation struct > > }
                < padding bits >
                 ! < Non-distribution part error : bit (*) = < no string > > }
            ! < Message escape : 1 bit (*) = <no string> > }
        ! < Address information part error : bit (*) = < no string > > }
    ! < Distribution part error : bit (*) = < no string > > ;

< Fixed Allocation struct > ::=
    < FINAL_ALLOCATION : bit (1) >
    { 0     -- Repeat Allocation
        < TS_OVERRIDE : bit (8) >
    | 1     -- Allocation with Allocation bitmap
        < TBF Starting Time : < Starting Frame Number Description IE > >
        { 0 | 1  <TIMESLOT_ALLOCATION : bit (8) > }
        { 0 { 0         -- with length of Allocation Bitmap
                < BLOCKS_OR_BLOCK_PERIODS : bit (1) >
                < ALLOCATION_BITMAP_LENGTH : bit (7) >
                < ALLOCATION_BITMAP : bit (val(ALLOCATION_BITMAP_LENGTH)) >
            | 1     -- without length of Allocation Bitmap (fills remainder of the message)
                < ALLOCATION_BITMAP : bit ** > }
            ! < Message escape : 1 bit (*) = <no string> > } ;
```

Table 77: PACKET UPLINK ACK/NACK information element details

PAGE_MODE (2 bit field)
This field is defined in clause 12.20.

UPLINK_TFI (5 bit field)
This field identifies the uplink TBF to which this message applies. This field is coded the same as the TFI field defined in subclause 12.15.

CHANNEL_CODING_COMMAND (2 bit field)
The Channel Coding Indicator field indicates the channel coding scheme that the mobile station shall use when transmitting on the uplink.

bits

2 1	value
0 0	CS-1
0 1	CS-2
1 0	CS-3

1 1 CS-4

Ack/Nack Description
This information element is defined in subclause 12.3.

CONTENTION_RESOLUTION_TLLI (32 bit field)
The CONTENTION_RESOLUTION_TLLI field is present only if the network has decoded one of the uplink RLC data blocks containing the TLLI. The mobile station shall perform the contention resolution function if the TLLI information element is present. This field contains a TLLI, which is defined in subclause 12.16.

Packet Timing Advance
This information element is defined in subclause 12.12.

TIMESLOT_ALLOCATION (8 bit field)
This field is defined in subclause 12.18.

Power Control Parameters
This information element, if present, contains power control command for the mobile station. If this information element is not present for certain previously allocated timeslots, the MS shall continue to use the previous power on these timeslots. This information element is defined in subclause 12.13.

Extension Bits
This information element, if present, shall be skipped over. Any information content shall be ignored by the mobile station. This information element is defined in subclause 12.26.

FINAL_ALLOCATION (1 bit field)
This field indicates whether this allocation is the last allocation of the TBF.

0 this allocation is not the last allocation of the TBF
1 this allocation is the last allocation of the TBF

Repeat Allocation
If present, the mobile station shall repeat the current allocation after the current allocation ends.

TS_OVERRIDE (8 bit field)
This is defined in subclause 12.19.

Allocation with Allocation bitmap
If present, the mobile station shall use the included Allocation bitmap and associated parameters. The mobile station shall not repeat the current allocation after the current allocation ends.

BLOCKS_OR_BLOCK_PERIODS (1 bit field)
This indicates if the ALLOCATION_BITMAP is to be interpreted as blocks or block periods.

0 the ALLOCATION_BITMAP is to be interpreted as blocks
1 the ALLOCATION_BITMAP is to be interpreted as block periods

ALLOCATION_BITMAP_LENGTH (7 bit field)
This field specifies the number of bits in the ALLOCATION_BITMAP.
Range 0 to 127

TBF Starting Time
The TBF Starting Time field contains a starting time that indicates the earliest framenumber during which the assigned TBF may start.

In case of dynamic allocation, the MS shall continue to use the parameters of the existing TBF until the TDMA framenumber occurs. When the indicated TDMA framenumber occurs, the mobile station shall immediately begin to monitor the USF field and use the new assigned uplink TBF parameters when its USF has occured.

In case of fixed allocation, the MS shall continue to use the parameters of the existing TBF until the TDMA framenumber occurs. When the TDMA frame number occurs, the MS shall then use the assigned uplink resources from the indicated TDMA frame number forward, according to the parameters in the fixed allocation struct.

This information element is defined in subclause 12.21.

ALLOCATION_BITMAP (variable length field)

The ALLOCATION_BITMAP field is variable length. If the ALLOCATION_BITMAP_LENGTH field is not present, the ALLOCATION_BITMAP fills the remainder of the message. If the BLOCKS_OR_BLOCK_PERIODS field is not present, then the ALLOCATION_BITMAP should be interpreted as blocks. This field is defined in subclause 12.4.

11.2.29 Packet Uplink Assignment

This message is sent on the PCCCH or PACCH by the network to the mobile station to assign uplink resources. The mobile station may be addressed by TFI, TQI, or Packet Request Reference depending upon the procedure used. A mobile allocation or reference frequency list received as part of this assignment message shall be valid until new assignment is received or each TBF of the MS are terminated.

Message type: PACKET UPLINK ASSIGNMENT

Direction: network to mobile station

Classification: non-distribution message

Table 78: PACKET UPLINK ASSIGNMENT information elements

```
< Packet Uplink Assignment message content > ::=
    < PAGE_MODE : bit (2) >
    { 0 | 1 <PERSISTENCE_LEVEL : bit (4) > * 4 }
    {   {  0< Global TFI : < Global TFI IE > >
         | 10    < TLLI : bit (32) >
         | 110   < TQI : bit (16) >
         | 111   < Packet Request Reference : < Packet Request Reference IE > > }
        { 0      -- Message escape
            {    < CHANNEL_CODING_COMMAND : bit (2) >
                 < TLLI_BLOCK_CHANNEL_CODING : bit (1) >
                 < Packet Timing Advance : < Packet Timing Advance IE > >
                 { 0 | 1  < Frequency Parameters : < Frequency Parameters IE > > }
                 { 01     <Dynamic Allocation : < Dynamic Allocation struct > >
                  | 10    <Single Block Allocation : < Single Block Allocation struct > >
                  | 00    < extension >
                  | 11    < Fixed allocation : < Fixed Allocation struct > > }
                 < padding bits >
                  ! < Non-distribution part error : bit (*) = < no string > > }
             ! < Message escape : 1 bit (*) = <no string> > }
         ! < Address information part error : bit (*) = < no string > > }
     ! < Distribution part error : bit (*) = < no string > > ;

<extension> ::=   -- Future extension can be done by modifying this structure
    null ;

<Dynamic Allocation struct > ::=
    < Extended Dynamic Allocation : bit (1) >
    { 0 | 1 < P0 : bit (4) >
    < PR_MODE : bit (1) > }
    < USF_GRANULARITY : bit (1) >
    { 0 | 1 < UPLINK_TFI_ASSIGNMENT : bit (5) > }
    { 0 | 1 < RLC_DATA_BLOCKS_GRANTED : bit (8) > }
    { 0 | 1 < TBF Starting Time : < Starting Frame Number Description IE > > }
    { 0                        -- Timeslot Allocation
        { 0 | 1 < USF_TN0 : bit (3) > }
        { 0 | 1 < USF_TN1 : bit (3) > }
        { 0 | 1 < USF_TN2 : bit (3) > }
        { 0 | 1 < USF_TN3 : bit (3) > }
        { 0 | 1 < USF_TN4 : bit (3) > }
        { 0 | 1 < USF_TN5 : bit (3) > }
        { 0 | 1 < USF_TN6 : bit (3) > }
        { 0 | 1 < USF_TN7 : bit (3) > }
    | 1                        -- Timeslot Allocation with Power Control Parameters
        < ALPHA : bit (4) >
        { 0 | 1  < USF_TN0 : bit (3) >
                 < GAMMA_TN0 : bit (5) > }
```

```
        { 0 | 1  < USF_TN1 : bit (3) >
                 < GAMMA_TN1 : bit (5) > }
        { 0 | 1  < USF_TN2 : bit (3) >
                 < GAMMA_TN2 : bit (5) > }
        { 0 | 1  < USF_TN3 : bit (3) >
                 < GAMMA_TN3 : bit (5) > }
        { 0 | 1  < USF_TN4 : bit (3) >
                 < GAMMA_TN4 : bit (5) > }
        { 0 | 1  < USF_TN5 : bit (3) >
                 < GAMMA_TN5 : bit (5) > }
        { 0 | 1  < USF_TN6 : bit (3) >
                 < GAMMA_TN6 : bit (5) > }
        { 0 | 1  < USF_TN7 : bit (3) >
                 < GAMMA_TN7 : bit (5) > } } ;

<Single Block Allocation struct > ::=
    < TIMESLOT_NUMBER : bit (3) >
    { 0 | 1 < ALPHA : bit (4) >
    < GAMMA_TN : bit (5) >}
    { 0 | 1 < P0 : bit (4) >
            < BTS_PWR_CTRL_MODE : bit (1) >
            < PR_MODE  : bit (1) > }
    < TBF Starting Time : < Starting Frame Number Description IE > > ;

<Fixed Allocation struct > ::=
    { 0 | 1 < UPLINK_TFI_ASSIGNMENT : bit (5) > }
    < FINAL_ALLOCATION : bit (1) >
    < DOWNLINK_CONTROL_TIMESLOT: bit (3) >
    { 0 | 1 < P0 : bit (4) >
            < BTS_PWR_CTRL_MODE : bit (1) >
            < PR_MODE : bit (1) > }
    { 0 < TIMESLOT_ALLOCATION : bit (8) >
     | 1 < Power Control Parameters : < Power Control Parameters IE > > }
    < HALF_DUPLEX_MODE : bit (1) >
    < TBF Starting Time : < Starting Frame Number Description IE > >
    { 0 { 0          -- with length of Allocation Bitmap
            < BLOCKS_OR_BLOCK_PERIODS : bit (1) >
            < ALLOCATION_BITMAP_LENGTH : bit (7) >
            < ALLOCATION_BITMAP : bit (val(ALLOCATION_BITMAP_LENGTH)) >
        | 1          -- without length of Allocation Bitmap (fills remainder of the message)
            < ALLOCATION_BITMAP : bit ** > }
        ! < Message escape : 1 bit (*) = <no string> > } ;
```

NOTE: If the ALLOCATION_BITMAP_LENGTH is not present, then the ALLOCATION_BITMAP field is variable length and fills the remainder of the message.

Table 79: PACKET UPLINK ASSIGNMENT information element details

PAGE_MODE (2 bit field)
This field is defined in clause 12.20.

PERSISTENCE_LEVEL (4 bit field for each Radio Priority 1…4)
This field is defined in subclause 12.14, PRACH Control Parameters.

Referenced Address struct
This information element contains the address of the mobile station addressed by the message.

Global TFI
This information element identifies the uplink TFI, if available, or the downlink TFI, to which this message applies. This field is defined in subclause 12.10.

TQI (16 bit field)
This field is defined in subclause 12.17.

Packet Request Reference

This information element is defined in subclause 12.11.

TIMESLOT_ALLOCATION (8 bit field)
This field is defined in subclause 12.18. If this field is not present, the timeslot allocation is indicated by the Power Control Parameters IE.

CHANNEL_CODING_COMMAND (2 bit field)
The Channel Coding Indicator field indicates the channel coding scheme that the mobile station shall use when transmitting data on the uplink.

bit 2 1	
0 0	CS-1
0 1	CS-2
1 0	CS-3
1 1	CS-4

TLLI_BLOCK_CHANNEL_CODING (1 bit field)
This field indicates the channel coding command that the mobile station shall use for any RLC data block containing a TLLI field in the RLC data block header. This field is coded as shown:

0 the MS shall use CS-1 for any RLC data block containing a TLLI in the RLC data block header
1 the MS shall use the value commanded in the CHANNEL_CODING_COMMAND for any RLC data block containing a TLLI in the RLC data block header

UPLINK_TFI_ASSIGNMENT (5 bit field)
This information element, if present, assigns the contained TFI to the mobile station to identify to uplink TBF described by this message. This field is coded the same as the TFI field defined in subclause 12.15.

Packet Timing Advance
This information element is defined in subclause 12.12.

Frequency Parameters
This information element, if present, assigns frequency parameters to the uplink TBF. If this information element is not present the mobile station shall use its previously assigned frequency parameters. This information element is defined in subclause 12.8.

Dynamic Allocation struct
This information element contains parameters necessary to define the radio resources of a dynamic allocation or an extended dynamic allocation.

Extended Dynamic Allocation (1 bit field)
This information field indicates the medium access mode to be used during the TBF.
0 Dynamic Allocation
1 Extended Dynamic Allocation

Power Control Parameters
This information element, if present, contains power control parameters and the timeslot allocation for the mobile station. If this information element is not present, the MS shall continue to use the previous parameters. This information element is defined in subclause 12.13.

RLC_DATA_BLOCKS_GRANTED (8 bit field)
The RLC/MAC blocks Granted field assigns a fixed number of RLC data blocks that the mobile station shall transmit during the uplink TBF. If the RLC_DATA_BLOCKS_GRANTED field is present the mobile station shall transmit only the assigned number of RLC data blocks. Otherwise the duration of the uplink TBF is undefined. Retransmissions of negatively acknowledged RLC data blocks do not apply toward the maximum number. This field is encoded as a binary number as shown:

bit 8 7 6 5 4 3 2 1	
0 0 0 0 0 0 0 0	9 RLC data blocks
0 0 0 0 0 0 0 1	10 RLC data blocks
. . .	
1 1 1 1 1 1 1 1	264 RLC data blocks

TBF Starting Time
The TBF Starting Time field contains a starting time that indicates the framenumber during which the assigned TBF may start.

In case of dynamic allocation, if no uplink TBF is in progress, the MS need not monitor the USF field until the TDMA framenumber occurs. When the indicated TDMA framenumber occurs, the mobile station shall immediately begin to monitor the USF field and use the new assigned uplink TBF parameters when its USF has occured. If an uplink TBF is already in progress, the MS shall continue to use the parameters of the existing TBF until the TDMA framenumber occurs. When the indicated TDMA framenumber occurs, the mobile station shall immediately begin to monitor the USF field and use the new assigned uplink TBF parameters when its USF has occured.

In case of single block allocation, the mobile station shall use the assigned timeslot during the RLC/MAC block whose first TDMA burst occurs in the indicated TDMA framenumber.

In case of fixed allocation, if no uplink TBF is in progress, the MS shall wait untile the TDMA framenumber occurs, and then. shall use the assigned uplink resources from the indicated TDMA frame number forward, according to the parameters in the fixed allocation struct. If an uplink TBF is in progress, the MS shall continue to use the parameters of the existing TBF until the TDMA framenumber occurs. When the TDMA frame number occurs, the MS shall then use the assigned uplink resources from the indicated TDMA frame number forward, according to the parameters in the fixed allocation struct.

This information element is encoded as the Starting Frame Number Description IE. See subclause 12.21.

USF for Timeslot Number 0 (TN0) (3 bit field)
USF for Timeslot Number 1 (TN1) (3 bit field)
USF for Timeslot Number 2 (TN2) (3 bit field)
USF for Timeslot Number 3 (TN3) (3 bit field)
USF for Timeslot Number 4 (TN4) (3 bit field)
USF for Timeslot Number 5 (TN5) (3 bit field)
USF for Timeslot Number 6 (TN6) (3 bit field)
USF for Timeslot Number 7 (TN7) (3 bit field)
These fields indicate the USF value assigned to the MS for allocated timeslots (range 0 to 7). These fields are encoded as a binary presentation of the USF value as defined in subclause 10.4.1.

USF_GRANULARITY (1 bit field)
This information field indicates the USF granularity to be applied by the mobile station when it is assigned a TBF using Dynamic Allocation.

0 the mobile station shall transmit one RLC/MAC block
1 the mobile station shall transmit four consecutive RLC/MAC blocks

Single Block Allocation struct
This information element contains parameters necessary to define the radio resources of a Single Block allocation. For example for sending of a PACKET RESOURCE REQUEST message in a two phase access or a Measurement report.

TIMESLOT_NUMBER (3 bit field)
This field indicates the timeslot assigned for transfer of a single RLC/MAC block on the uplink. This field is coded as the binary representation of the timeslot number as defined in GSM 05.10.
Range 0 to 7

ALPHA (4 bit field)
For encoding and description see the Global Power Control Parameters IE.

GAMMA_TN (5 bit field)
The GAMMA_TN field is the binary representation of the parameter ΓCH for MS output power control in units of 2 dB, see GSM 05.08. The GAMMA_TN field is coded according to the following table:

bit 5 4 3 2 1	
0 0 0 0 0	ΓCH = 0 dB
0 0 0 0 1	ΓCH = 2 dB
: : : :	
1 1 1 1 0	ΓCH = 60 dB

1 1 1 1 1 ΓCH = 62 dB

P0 (4 bit field)
This field is an optional downlink power control parameter. If P0 is present, then downlink power control is used; otherwise, if P0 is not present, then downlink power control is not used. Its meaning is specific to downlink power control modes A and B used by the network, as per GSM 05.08. It is encoded as follows:

bit
4 3 2 1
0 0 0 0 P0 = 0 dB
0 0 0 1 P0 = 2 dB
0 0 1 0 P0 = 4 dB
:
1 1 1 1 P0 = 30 dB

BTS_PWR_CTRL_MODE (1 bit field)
This field indicates the downlink power control mode used by the network, as defined in GSM 05.08. It is encoded as follows:

0 Mode A
1 Mode B

PR_MODE (1 bit field)
This field indicates , as defined in GSM 05.08. It is encoded as follows:
0 PR mode A : for one addressed MS
1 PR mode B : for all MS

Fixed Allocation struct
This information element contains parameters necessary to define the radio resources of a fixed allocation.

FINAL_ALLOCATION (1 bit field)
This field indicates whether this allocation is the last allocation of the TBF.

0 this allocation is not the last allocation of the TBF
1 this allocation is the last allocation of the TBF

HALF_DUPLEX_MODE (1 bit field)
This information field indicates, for multislot class 19 to 29, whether the mobile station shall operate in half duplex mode. Other mobile stations shall consider this field as 0.

0 the MS shall not operate in half duplex mode
1 the MS shall operate in half duplex mode

BLOCKS_OR_BLOCK_PERIODS (1 bit field)
This indicates if the ALLOCATION_BITMAP is to be interpreted as blocks or block periods.

0 the ALLOCATION_BITMAP is to be interpreted as blocks
1 the ALLOCATION_BITMAP is to be interpreted as block periods

DOWNLINK_CONTROL_TIMESLOT (3 bit field)

This information field indicates the downlink timeslot that mobile station operating in fixed allocation mode shall monitor for downlink PACCH. This field is coded as the binary representation of the timeslot number as defined in GSM 05.10.
Range 0 to 7

ALLOCATION_BITMAP_LENGTH (7 bit field)
This specifies the number of bits in the ALLOCATION_BITMAP.
Range 0 to 127

ALLOCATION_BITMAP (variable length field)
If The ALLOCATION_BITMAP field is variable length. If the ALLOCATION_BITMAP_LENGTH field is not present, the ALLOCATION_BITMAP fills the remainder of the message. If the BLOCKS_OR_BLOCK_PERIODS field is not present, then the ALLOCATION_BITMAP should be interpreted as blocks. This field is defined in

subclause 12.4.

11.2.30 Spare

11.2.31 Packet Timeslot Reconfigure

This message is sent on the PACCH by the network to the mobile station to assign uplink and/or downlink resources. A mobile allocation or reference frequency list received as part of this assignment message shall be valid until a new assignment is received or each TBF of the MS are terminated.

Message type: PACKET TIMESLOT RECONFIGURE

Direction: network to mobile station

Classification: non-distribution message

Table 80: PACKET TIMESLOT RECONFIGURE information elements

```
< Packet Timeslot Reconfigure message content > ::=
    < PAGE_MODE : bit (2) >
    {   0 < GLOBAL_TFI : < Global TFI IE > >
        { 0      -- Message escape
            {    < CHANNEL_CODING_COMMAND : bit (2) >
                 < Global Packet Timing Advance : < Global Packet Timing Advance IE > >
                 < DOWNLINK_RLC_MODE : bit (1) >
                 < CONTROL_ACK : bit (1) >
                 { 0 | 1 < DOWNLINK_TFI_ASSIGNMENT : bit (5) > }
                 { 0 | 1 < UPLINK_TFI_ASSIGNMENT : bit (5) > }
                 < DOWNLINK_TIMESLOT_ALLOCATION : bit (8) >
                 { 0 | 1  < Frequency Parameters : < Frequency Parameters IE > > }
                 { 0 < Dynamic Allocation : < Dynamic Allocation struct > >
                 | 1  < Fixed allocation : < Fixed Allocation struct > >}
                 < padding bits >
                  ! < Non-distribution part error : bit (*) = < no string > > }
            ! < Message escape : 1 bit (*) = <no string> > }
        ! < Address information part error : bit (*) = < no string > > }
    ! < Distribution part error : bit (*) = < no string > > ;

<Dynamic Allocation struct > ::=
    < Extended Dynamic Allocation : bit (1) >
    { 0 | 1 < P0 : bit (4) >
            <PR_MODE : bit (1)>}
    < USF_GRANULARITY : bit (1) >
    { 0 | 1 < RLC_DATA_BLOCKS_GRANTED : bit (8) > }
    { 0 | 1 < TBF Starting Time : < Starting Frame Number Description IE > > }
    { 0                        -- Timeslot Allocation
        { 0 | 1 < USF_TN0 : bit (3) > }
        { 0 | 1 < USF_TN1 : bit (3) > }
        { 0 | 1 < USF_TN2 : bit (3) > }
        { 0 | 1 < USF_TN3 : bit (3) > }
        { 0 | 1 < USF_TN4 : bit (3) > }
        { 0 | 1 < USF_TN5 : bit (3) > }
        { 0 | 1 < USF_TN6 : bit (3) > }
        { 0 | 1 < USF_TN7 : bit (3) > }
    | 1                        -- Timeslot Allocation with Power Control Parameters
        < ALPHA : bit (4) >
        { 0 |      < USF_TN0 : bit (3) >
                   < GAMMA_TN0 : bit (5) > }
        { 0 | 1  < USF_TN1 : bit (3) >
                   < GAMMA_TN1 : bit (5) > }
        { 0 | 1  < USF_TN2 : bit (3) >
                    < GAMMA_TN2 : bit (5) > }
        { 0 | 1  < USF_TN3 : bit (3) >
                   < GAMMA_TN3 : bit (5) > }
```

```
        { 0 | 1  < USF_TN4 : bit (3) >
                 < GAMMA_TN4 : bit (5) > }
        { 0 | 1  < USF_TN5 : bit (3) >
                 < GAMMA_TN5 : bit (5) > }
        { 0 | 1  < USF_TN6 : bit (3) >
                 < GAMMA_TN6 : bit (5) > }
        { 0 | 1  < USF_TN7 : bit (3) >
                 < GAMMA_TN7 : bit (5) > } } ;

<Fixed Allocation struct > ::=
    { 0 < UPLINK_TIMESLOT_ALLOCATION : bit (8) >
     | 1 < Power Control Parameters : < Power Control Parameters IE > > }
    < FINAL_ALLOCATION : bit (1) >
    < DOWNLINK_CONTROL_TIMESLOT: bit (3) >
    { 0 | 1 < P0 : bit (4) >
            < BTS_PWR_CTRL_MODE : bit (1) >
            < PR_MODE : bit (1) > }
    { 0 | 1  < Measurement Mapping : < Measurement Mapping struct > > }
    < TBF Starting Time : < Starting Frame Number Description IE > >
    { 0 { 0          -- with length of Allocation Bitmap
            < BLOCKS_OR_BLOCK_PERIODS : bit (1) >
            < ALLOCATION_BITMAP_LENGTH : bit (7) >
            < ALLOCATION_BITMAP : bit (val(ALLOCATION_BITMAP_LENGTH)) >
        | 1          -- without length of Allocation Bitmap (fills remainder of the message)
            < ALLOCATION_BITMAP : bit ** > }
        ! < Message escape : 1 bit (*) = <no string> > } ;

< Measurement Mapping struct > ::=
    < Measurement Starting Time : < Starting Frame Number Description IE >
    < MEASUREMENT_INTERVAL : bit (5) >
    < MEASUREMENT_BITMAP : bit (8) > ;
```

Table 81: PACKET TIMESLOT RECONFIGURE information element details

Global TFI (6 bit field)
This field identifies the uplink TFI, if available, or the downlink TFI, to which this message applies. This field is defined in subclause 12.10.

CHANNEL_CODING_COMMAND (2 bit field)
The Channel Coding Indicator field indicates the channel coding scheme that the mobile station shall use when transmitting on the uplink.

bit 2 1	
0 0	CS-1
0 1	CS-2
1 0	CS-3
1 1	CS-4

Global Packet Timing Advance
This information element is defined in subclause 12.12a.

DOWNLINK_RLC_MODE (1 bit field)
This field indicates the RLC mode of the requested TBF.

0	RLC acknowledged mode
1	RLC unacknowledged mode

CONTROL_ACK (1 bit field)
This field shall be set to '1' if the network establishes a new downlink TBF for the mobile station whose timer T3192 is running. Otherwise this field shall be set to '0'.

DOWNLINK_TFI_ASSIGNMENT (5 bit field)
This information element, if present, assigns the contained TFI to the mobile station to identify a downlink TBF

described by this message. This field is coded the same as the TFI field defined in subclause 12.15.

UPLINK_TFI_ASSIGNMENT (5 bit field)
This information element, if present, assigns the contained TFI to the mobile station to identify an uplink TBF described by this message. This field is coded the same as the TFI field defined in subclause 12.15.

UPLINK_TIMESLOT_ALLOCATION (8 bit field)
This field contains the timeslot allocation for the uplink TBF and is defined in subclause 12.18. If this field is not present, the timeslot allocation for the uplink TBF is indicated by the Power Control Parameters IE.

DOWNLINK_TIMESLOT_ALLOCATION (8 bit field)
This field is defined in subclause 12.18.

Power Control Parameters
This information element, if present, contains the power parameters command and timeslot allocation for the uplink TBF. If this information element is not present, the MS shall continue to use the previous parameters. This information element is defined in subclause 12.13.

Frequency Parameters
This information element, if present, assigns frequency parameters to the uplink and downlink TBFs. If this information element is not present the mobile station shall use its previously assigned frequency parameters. This information element is defined in subclause 12.8.

RLC_DATA_BLOCKS_GRANTED (8 bit field)
The RLC/MAC blocks Granted field assigns a fixed number of RLC data blocks that the mobile station shall transmit during the uplink TBF. If the RLC_DATA_BLOCKS_GRANTED field is present the mobile station shall transmit only the assigned number of RLC data blocks. Otherwise the duration of the uplink TBF is undefined. Retransmissions of negatively acknowledged RLC data blocks do not apply toward the maximum number. This field is encoded as a binary number as shown:

bit 8 7 6 5 4 3 2 1	
0 0 0 0 0 0 0 0	9 RLC data blocks
0 0 0 0 0 0 0 1	10 RLC data blocks
. . .	
1 1 1 1 1 1 1 1	264 RLC data blocks

Dynamic Allocation struct
This information element contains parameters necessary to define the radio resources of a dynamic allocation or an extended dynamic allocation.

Extended Dynamic Allocation (1 bit field)
This information field indicates the medium access mode to be used during the TBF.

0 Dynamic Allocation
1 Extended Dynamic Allocation

TBF Starting Time
The TBF Starting Time field contains a starting time that indicates the framenumber during which the assigned TBF may start.

If no downlink TBF is in progress, the mobile station need not monitor the TFI field of downlink RLC data blocks until the indicated TDMA framenumber. After the indicated TDMA framenumber, the mobile station shall apply the new downlink parameters and then operate as during a downlink TBF. If a downlink TBF is already in progress, the mobile station shall continue to use the parameters of the existing TBF until the TDMA framenumber occurs. When the indicated TDMA framenumber occurs, the mobile station shall immediately begin to use the new downlink parameters assigned.

In case of dynamic allocation, if no uplink TBF is in progress, the MS need not monitor the USF field until the TDMA framenumber occurs. When the indicated TDMA framenumber occurs, the mobile station shall immediately begin to monitor the USF field and use the new assigned uplink TBF parameters when its USF has occured. If an uplink TBF is already in progress, the MS shall continue to use the parameters of the existing TBF until the TDMA framenumber occurs. When the indicated TDMA framenumber occurs, the mobile station shall immediately begin to monitor the USF field and use the new assigned uplink TBF parameters when its USF has occured.

In case of fixed allocation, if no uplink TBF is in progress, the MS shall wait untile the TDMA framenumber occurs, and then. shall use the assigned uplink resources from the indicated TDMA frame number forward, according to the parameters in the fixed allocation struct. If an uplink TBF is in progress, the MS shall continue to use the parameters of the existing TBF until the TDMA framenumber occurs. When the TDMA frame number occurs, the MS shall then use the assigned uplink resources from the indicated TDMA frame number forward, according to the parameters in the fixed allocation struct.

This field is encoded as the Starting Frame Number Description IE. See subclause 12.21

USF for Timeslot Number 0 (TN0) (3 bit field)
USF for Timeslot Number 1 (TN1) (3 bit field)
USF for Timeslot Number 2 (TN2) (3 bit field)
USF for Timeslot Number 3 (TN3) (3 bit field)
USF for Timeslot Number 4 (TN4) (3 bit field)
USF for Timeslot Number 5 (TN5) (3 bit field)
USF for Timeslot Number 6 (TN6) (3 bit field)
USF for Timeslot Number 7 (TN7) (3 bit field)
These fields indicate the USF value assigned to the MS for timeslots 0 to 7. These fields are encoded as a binary presentation of the USF value as defined in subclause 10.4.1.

ALPHA (4 bit field)
For encoding and description see the Global Power Control Parameters IE

GAMMA_TN (5 bit field)
The GAMMA_TN field is the binary representation of the parameter ΓCH for MS output power control in units of 2 dB, see GSM 05.08. The GAMMA_TN field is coded according to the following table:

bit 5 4 3 2 1	
0 0 0 0 0	ΓCH = 0 dB
0 0 0 0 1	ΓCH = 2 dB
: : : :	
1 1 1 1 0	ΓCH = 60 dB
1 1 1 1 1	ΓCH = 62 dB

USF_GRANULARITY (1 bit field)
This information field indicates the USF granularity to be applied by the mobile station when it is assigned a TBF using Dynamic Allocation.

0 the mobile station shall transmit one RLC/MAC block
1 the mobile station shall transmit four consecutive RLC/MAC blocks

Fixed Allocation struct
This information element contains parameters necessary to define the radio resources of a fixed allocation.

BLOCKS_OR_BLOCK_PERIODS (1 bit field)
This indicates if the ALLOCATION_BITMAP is to be interpreted as blocks or block periods.

0 the ALLOCATION_BITMAP is to be interpreted as blocks
1 the ALLOCATION_BITMAP is to be interpreted as block periods

DOWNLINK_CONTROL_TIMESLOT (3 bit field)
This information field indicates the downlink timeslot that mobile station operating in fixed allocation mode shall monitor for downlink PACCH. This field is coded as the binary representation of the timeslot number as defined in GSM 05.10.
Range 0 to 7

P0 (4 bit field)
For description and encoding, see the Packet Uplink Assignment message.

BTS_PWR_CTRL_MODE (1 bit field)
For description and encoding, see the Packet Uplink Assignment message.

PR_MODE (1 bit field)

For description and encoding, see the Packet Uplink Assignment message.

ALLOCATION_BITMAP_LENGTH (7 bit field)
This specifies the number of bits in the ALLOCATION_BITMAP.
Range 0 to 127

ALLOCATION_BITMAP (variable length field)
The ALLOCATION_BITMAP field is variable length. If the ALLOCATION_BITMAP_LENGTH field is not present, the ALLOCATION_BITMAP fills the remainder of the message. If the BLOCKS_OR_BLOCK_PERIODS field is not present, then the ALLOCATION_BITMAP should be interpreted as blocks. This field is defined in subclause 12.4.

Measurement Starting Time
The Measurement Starting Time field contains a starting time that indicates the framenumber during which the first assigned measurement period shall occur. The mobile station must make one or more neighbour cell power measurements during the assigned framenumber and during the following 3 TDMA frames. This field is encoded the same as the Starting Frame Number Description IE. See subclause 12.21

MEASUREMENT_BITMAP (8 bit field)
This information field indicates the timeslots assigned for use during measurement periods. The field as a bitmap where each bit corresponds with a timeslot number. Bit 1 corresponds to TS0; Bit 2 to TS1...

0 the MS shall receive downlink data during this timeslot
1 the MS shall make measurements during the timeslot

MEASUREMENT_INTERVAL (5 bit field)
The Measurement Interval field indicates the number of block periods from the start of one assigned measurement period to the beginning of the next measurement period.

bit 5 4 3 2 1	
0 0 0 0 0	make measurements during every block period
0 0 0 0 1	make measurements during every other block period
0 0 0 1 0	make measurements during every 3rd block period
. . .	
1 1 1 1 1	make measurements during every 32nd block period

12 Information element coding

12.1 Overview

Information elements used within the context of only one RLC/MAC control message are defined in clause 11. All other information elements are defined within the present clause.

12.2 Spare

12.3 Ack/Nack Description

The Ack/Nack Description information element contains the RLC parameters used to acknowledge or negatively acknowledge a group of RLC data blocks.

Table 82: *Ack/Nack Description* information elements

< Ack/Nack Description IE > ::=
< **FINAL_ACK_INDICATION** : bit (1) >
< **STARTING_SEQUENCE_NUMBER** : bit (7) >
< **RECEIVED_BLOCK_BITMAP** : bit (64) > ;

Table 83: *Ack/Nack Description* information element details

FINAL_ACK_INDICATION (1 bit field)
This field indicates whether the entire TBF is being acknowledged. If the entire TBF is being acknowledged, the SSN and RBB fields contain no information and shall be ignored.

0 retransmission are requested and the TBF is incomplete
1 no retransmissions are requested and this message indicates acknowledgement of all RLC data in the TBF

STARTING_SEQUENCE_NUMBER (SSN) (7 bit field)
The SSN contains the value of V(R) when this information element was transmitted. This field is encoded as the binary representation of V(R).
Range 0 to 127

RECEIVE_BLOCK_BITMAP (RBB) (64 bit field)
The RBB is a bitmap representing Block Sequence Numbers. The bitmap is indexed relative to SSN as follows:

BSN = (SSN - bit_number) modulo 128, for bit_number = 1 to 64.

The BSN values represented range from (SSN - 1) mod 128 to (SSN - 64) mod 128.

The value of each bit is encoded as:

0 Negative acknowledgement of the RLC data block with BSN = (SSN - bit_number) mod 128
1 Positive acknowledgement of the RLC data block with BSN = (SSN - bit_number) mod 128

Mapping of the bitmap is defined on subclause 11.

12.4 ALLOCATION_BITMAP

The ALLOCATION_BITMAP represents uplink radio blocks, each bit representing one radio block or an entire block period. Each bit indicates whether the mobile station is permitted to transmit during the corresponding uplink radio block or radio block period.

Table 84: *ALLOCATION_BITMAP* information element details

ALLOCATION_BITMAP (variable length field)
The ALLOCATION_BITMAP represents uplink radio blocks or radio block periods, each bit representing one radio block or an entire radio block.

If the BLOCKS_OR_BLOCK_PERIODS field indicates blocks, the bitmap describes a two dimensional array of radio blocks. The number of columns in the array is variable and is equal to the number of timeslots allocated in the TIMESLOT_ALLOCATION. The array is indexed as follows:

radio block[x,y]

$$x = (L - n) / NTS, \quad \text{for } n = 0 \text{ to } L,$$
$$y = (L - n) \bmod NTS \quad \text{for } n = 0 \text{ to } L,$$

where:
x = block period relative to TBF_STARTING_TIME, range 0 to L / NTS;
y = timeslot number of the assigned timeslots in the TIMESLOT_BITMAP, range 0 to NTS-1;
L = number of bits in the ALLOCATION_BITMAP - 1;
n = bit number index into the ALLOCATION_BITMAP, range 0 to L;
TBF_STARTING_TIME indicates the first block period of the assigned allocation;
NTS = number of timeslots assigned in the TIMESLOT_ALLOCATION, range 1 to 8;
The division operation is integer division;
The modulo operation is integer modulo.

The value of each bit is encoded as:

0 radio block[x,y] is not part of the assigned allocation
1 radio block[x,y] is part of the assigned allocation

If the BLOCKS_OR_BLOCK_PERIODS field indicates block periods, the bitmap describes a one dimensional array of block periods. For each block period indicated as part of the allocation in the bitmap, each of the timeslots indicated in the TIMESLOT_ALLOCATION is assigned as part of the allocation. The array is indexed as follows:

block period[z]

$$z = n \quad \text{for } n = 0 \text{ to } L,$$

where:
L = number of bits in the ALLOCATION_BITMAP - 1;
z = block period relative to TBF_STARTING_TIME;
n = bit number index into the ALLOCATION_BITMAP, range 0 to L;
TBF_STARTING_TIME indicates the first block period of the assigned allocation;
NTS = number of timeslots assigned in the TIMESLOT_ALLOCATION, range 1 to 8.

The value of each bit is encoded as:

0 block period[n] is not part of the assigned allocation
1 block period[n] is part of the assigned allocation

12.5 Spare

12.6 Spare

12.7 Channel Request Description

The Channel Request Description information element is sent by the mobile station to the network to request uplink resources.

Table 85: *Channel Request Description* information elements

< Channel Request Description IE > ::=
< **PEAK_THROUGHPUT_CLASS** : bit (4) >
< **RADIO_PRIORITY** : bit (2) >
< **RLC_MODE** : bit (1) >
< **LLC_ PDU_TYPE** : bit (1) >
< **RLC_OCTET_COUNT** : bit (16) > ;

Table 86: *Channel Request Description* information element details

PEAK_THROUGHPUT_CLASS (4 bit field) This field indicates the peak throughput class for the PDP context of the LLC PDU that caused the Channel Request Description IE to be transmitted. The field is coded as the binary representation of the Peak Throughput Class specified in GSM 03.60. Range: 1 to 9 **RADIO_PRIORITY** (2 bit field) This field indicates the Radio Priority of the requested TBF. The field is encoded as the Radio Priority field of the Packet Channel Request (see 11.2.5). **RLC_MODE** (1 bit field) This field indicates the RLC mode of the requested TBF. 0 RLC acknowledged mode 1 RLC unacknowledged mode **LLC_ PDU_TYPE** (1 bit field) This field indicates the type of the first LLC PDU to be transmitted over the requested uplink TBF. 0 LLC PDU is SACK or ACK 1 LLC PDU is not SACK or ACK **RLC_OCTET_COUNT** (16 bit field) The RLC_OCTET_COUNT field indicates the number of RLC data octets, plus the number of RLC data block length octets, that the mobile station wishes to transfer. The value '0' shall be interpreted as a request for an open-ended TBF by the mobile station. All other values shall be interpreted as a request for a close-ended TBF. Range 0 to 65535

12.8 Frequency Parameters

The Frequency Parameters information element defines frequency parameters and a training sequence code (TSC), which may be allocated to a mobile station to define its channel configuration. All timeslots in the channel configuration of the mobile station shall use the same frequency parameters and training sequence code.

The frequency parameters may consist of an ARFCN, defining a non-hopping radio frequency channel. The indirect encoding, the direct encoding 1 and the direct encoding 2 defines a hopping radio frequency channel.

Table 87: *Frequency Parameters* information elements

```
< Frequency Parameters IE > ::=
    < TSC : bit (3) >
    { 00 < ARFCN : bit (10) >
    | 01 < Indirect encoding : < Indirect encoding struct > >
    | 10 < Direct encoding 1 : < Direct encoding 1 struct > >
    | 11 < Direct encoding 2 : < Direct encoding 2 struct > > } ;

< Indirect encoding struct > ::=
    < MAIO : bit (6) >
    < MA_NUMBER : bit (4) >
    { 0 | 1  < CHANGE_MARK_1 : bit (2) >
            { 0 | 1 < CHANGE_MARK_2 : bit (2) > } } ;

< Direct encoding 1 struct > ::=
    < MAIO : bit (6) >
    < GPRS Mobile Allocation : < GPRS Mobile Allocation IE > > ;

< Direct encoding 2 struct > ::=
    < MAIO : bit (6) >
    < HSN : bit (6) >
    < Length of MA Frequency List contents : bit (4) >
    < MA Frequency List contents : octet (val(Length of MA Frequency List contents) + 3) > ;
```

Table 88: *Frequency Parameters* information element details

TSC (3 bit field)
This field is the binary representation of the training sequence code, see GSM 05.02. Range: 0 to 7.

ARFCN (10 bit field)
This field is the binary representation of the absolute radio frequency channel number (ARFCN) defined in GSM 05.05. Range 0 to 1023.

MAIO (6 bit field)
This field is the binary representation of the mobile allocation index offset (MAIO), see GSM 05.02. Range 0 to 63.

MA_NUMBER (4 bit field)
This field is the binary reference to a GPRS mobile allocation received in either the PSI2 information, the SI13/PSI13 information or a previous assignment message, see subclause 5.5.1.6. Range: 0 to 15.

CHANGE_MARK_1 (2 bit field)
CHANGE_MARK_2 (2 bit field)
These fields are the binary representations of the allowed values for the PSI or SI *change mark* associated with the GPRS mobile allocation that the MA_NUMBER field refers to. Range: 0 to 3.

GPRS Mobile Allocation (information element)
The *GPRS Mobile Allocation* information element is defined in subclause 12.10a.

HSN (6 bit field)
This field is the binary representation of the hopping sequence number, see GSM 05.02. Range: 0 to 63.

MA Frequency List contents (variable length octet string)
This variable length octet string is the representation of a set of radio frequency channels defining a GPRS mobile allocation. The encoding of the octet string is defined by the *value part* of the type 4 information element *Frequency List*, defined in GSM 04.08. The allowed formats of the *Frequency List* information element are the *bit map 0*, *1024 range*, *512 range*, *256 range*, *128 range* and *variable bit map* formats.

12.8.1 Abnormal cases

If the indirect encoding is used, this information element may contain the CHANGE_MARK_1 and 2 fields. If one of these fields is present, the receiver shall verify the validity of the PSI or SI *change mark* associated with the GPRS mobile allocation that the MA_NUMBER field refers to, see subclause 5.5.1.7. None of the CHANGE_MARK_1 and 2 fields shall be included if the MA_NUMBER refers to a GPRS mobile allocation received in a previous assignment message.

If the receiver detects that an inconsistency is contained in this information element, the information element shall be regarded as invalid. Such inconsistency may be that:

- an invalid PSI or SI *change mark* is associated with the referred GPRS mobile allocation;
- an CHANGE_MARK_1 or 2 field is included and the MA_NUMBER refers to a GPRS mobile allocation received in a previous assignment message; or
- an undefined MA_NUMBER or an invalid GPRS Mobile Allocation is contained in this information element.

If the inconsistency is due to an invalid PSI or SI *change mark* associated with the referred GPRS mobile allocation or an undefined MA_NUMBER in the range 0 ñ 14, the mobile station shall initiate a *partial acquisition* of PBCCH or BCCH information (see 5.5.1.4). It shall then obtain the PSI2 or SI13 information, which is concerned.

12.9 Global Power Control Parameters

The Global Power Control Parameters information element contains parameters the mobile station shall use to determine its TX power level.

Table 89: *Global Power Control Parameters* information elements

< Global Power Control Parameters IE > ::=
< **ALPHA** : bit (4) >
< **T_AVG_W** : bit (5) >
< **T_AVG_T** : bit (5) >
< **Pb** : bit (4) >
< **PC_MEAS_CHAN** : bit (1) >
< **INT_MEAS_CHANNEL_LIST_AVAIL** : bit (1) >
< **N_AVG_I** : bit (4) > ;

Table 90: *Global Power Control Parameters* information element details

ALPHA (4 bit field)
This field is the binary representation of the parameter α for MS output power control in units of 0.1, see GSM 05.08. Range: 0 to 10. The ALPHA power control parameter field is coded according to the following table:

bit 4 3 2 1	
0 0 0 0	α = 0.0
0 0 0 1	α = 0.1
0 0 1 0	α = 0.2
: :	
1 0 0 1	α = 0.9
1 0 1 0	α = 1.0

All other values are reserved in this version of the protocol and shall be interpreted by the mobile station as α = 1.0.

T_AVG_W (5 bit field)
The T_AVG_W parameter is a signal strength filter period for power control in packet idle mode. $2^{(k/2)}$ / 6 multiframes, k = 0, 1, 2, ... 25 (see GSM 05.08). Values greater than 25 shall be interpreted as 25 by the mobile station.

T_AVG_T (5 bit field)
The T_AVG_T parameter is a signal strength filter period for power control in packet transfer mode. $2^{(k/2)}$ / 6 multiframes, k = 0,1,2,...,25 (see GSM 05.08). Values greater than 25 shall be interpreted as 25 by the mobile station.

Pb (4 bit field)
The Pb parameter is a power reduction value used by the BTS on PBCCH blocks, relative to the output power used on BCCH. The field is coded according to the following table:

bit 4 3 2 1	
0 0 0 0	Pb = 0 dB
0 0 0 1	Pb = -2 dB
0 0 1 0	Pb = -4 dB
: :	
1 1 1 1	Pb = -30 dB

PC_MEAS_CHAN (1 bit field)
The PC_MEAS_CHAN parameter indicates where the mobile station shall measure the received power level on the downlink for the purpose of the uplink power control.

0 downlink measurements for power control shall be made on BCCH
1 downlink measurements for power control shall be made on PDCH

N_AVG_I (4 bit field)
The N_AVG_I parameter is an interfering signal strength filter constant for power control $2^{(k/2)}$, k=0,1,..,15 (see GSM 05.08).

Range: 0 to 15

INT_MEAS_CHANNEL_LIST_AVAIL (1 bit field)
Indicates if the optional PSI4 message is broadcast. If broadcast, the PSI4 contains the channel List for interference measurements (INT_MEAS_CHANNEL_LIST).

0 PSI4 message not broadcast
1 PSI4 message broadcast

12.10 Global TFI

The Global TFI (Temporary Flow Identity) information element contains either an uplink TFI or a downlink TFI. The uplink or downlink TFI identifies a single Temporary Block Flow.

Table 91: *Global TFI* information elements

< Global TFI IE > ::=
{ 0 < **UPLINK_TFI** : bit (5) >
| 1 < **DOWNLINK_TFI** : bit (5) > } ;

Table 92: *Global TFI* information element details

UPLINK_TFI (5 bit field)
This field identifies an uplink TBF. This field is coded the same as the TFI field defined in subclause 12.15.

DOWNLINK_TFI (5 bit field)
This field identifies a downlink TBF. This field is coded the same as the TFI field defined in subclause 12.15.

12.10a GPRS Mobile Allocation

The GPRS Mobile Allocation information element defines a set of radio frequency channels and a hopping sequence number (HSN), which may be allocated to a mobile station to define its channel configuration.

This information element may refer to a reference frequency list, or set of reference frequency lists defined in the PSI2 information. In case there is no such reference included in this information element, it refers to the cell allocation (CA) defined for the cell. The cell allocation is defined in the PSI2 information, if PBCCH is present in the cell, or in the SI1 information (see GSM 04.08), if PBCCH is not present in the cell.

There are two alternative ways to encode the GPRS mobile allocation, using the MA_BITMAP or the ARFCN index list.

Table 93: *GPRS Mobile Allocation* information elements

```
< GPRS Mobile Allocation IE > ::=
    < HSN : bit (6) >
    { 0 | 1   < RFL number list : < RFL number list struct > > }
    { 0  < MA_LENGTH : bit (6) >
        < MA_BITMAP : bit (val(MA_LENGTH) + 1) >
    | 1  { 0 | 1  < ARFCN index list : < ARFCN index list struct > > } } ;

< RFL number list struct > ::=
    < RFL_NUMBER : bit (4) >
    { 0 | 1  < RFL number list struct > } ;
< ARFCN index list struct > ::=
    < ARFCN_INDEX : bit (6) >
    { 0 | 1  < ARFCN index list struct > } ;
```

Table 94: *GPRS Mobile Allocation* information element details

HSN (6 bit field)
This field is the binary representation of the hopping sequence number, see GSM 05.02. Range: 0 to 63.

RFL number list (construction)
This construction is a list specifying the referenced set of reference frequency lists for this information element. If the list is not included, this information element refers to the cell allocation defined for the cell.

The number of radio frequency channels included in the referenced set of reference frequency lists or the referenced cell allocation (excluding any duplication of radio frequency channels) is denoted NF. The radio frequency channels shall be arranged by the receiver of this information element in the order of ascending ARFCN, except for ARFCN = 0, if included, which shall be put last. Each radio frequency channel shall then be assigned an ARFCN_INDEX value, ranging from zero, for the first radio frequency channel, to NFñ1, for the last radio frequency channel in the ordered set.

MA_BITMAP (variable length, 1 to 64 bit, field)
This field is a bitmap representing the radio frequency channels belonging to the GPRS mobile allocation. The number of bit positions in MA_BITMAP shall equal NF. The first bit position in MA_BITMAP corresponds to ARFCN_INDEX = NFñ1, the last position corresponds to ARFCN_INDEX = 0. Each bit position is coded:

0 the corresponding radio frequency channel does not belong to the GPRS mobile allocation;
1 the corresponding radio frequency channel belongs to the GPRS mobile allocation.

ARFCN index list (construction)
This construction is a list representing a set of radio frequency channels to be excluded from the definition of the GPRS mobile allocation. The GPRS mobile allocation is defined as consisting of the radio frequency channels included in the referenced set of reference frequency lists or the referenced cell allocation, except those represented by the ARFCN index list. If the list is not included, this information element defines a GPRS mobile allocation consisting of all radio frequency channels included in the referenced set of reference frequency lists or the referenced cell allocation, without exception.

RFL_NUMBER (4 bit field)
This field is the binary reference to a reference frequency list provided in PSI2. Range 0 to 15.

ARFCN_INDEX (6 bit field)
This field is the binary reference to a radio frequency channels in the referenced set of reference frequency lists or the referenced cell allocation. Range: 0 to NFñ1.

12.10a.1 Abnormal cases

If the receiver of this information element detects any inconsistency between the encoding of this information element and the referenced frequency information (i.e., an MA_BITMAP length or an ARFCN_INDEX value out of range, or an undefined RFL_NUMBER value), the information element shall be regarded as invalid.

12.11 Packet Request Reference

The purpose of the Packet Request Reference information element is to provide the information field sent in the Packet Channel Request and the framenumber, FN modulo 42432, in which the Packet Channel Request was received.

Table 95: *Packet Request Reference* information elements

< Packet Request Reference IE > ::=
  < **RANDOM_ACCESS_INFORMATION value** : bit (11) >
  < **FRAME_NUMBER** : bit (16) > ;

Table 96: *Packet Request Reference* information element details

RA, Random Access Information (11 bit field)
This is an unformatted 11 bit field. If the System Information parameter Access Burst Type indicates 11 bit access bursts are to be used, all 11 bits of this field are valid. Otherwise, only bits 8 through 1 are valid and bits 11 through 9 shall be set to '0'

	bit										
	11	10	9	8	7	6	5	4	3	2	1
Access Burst Type indicates 11	X	X	X	X	X	X	X	X	X	X	X
Access Burst Type indicates 8	0	0	0	X	X	X	X	X	X	X	X

FRAME_NUMBER (16 bit field)
This field is encoded the same as the Starting Time information element defined in GSM 04.08.

12.12 Packet Timing Advance

The Packet Timing Advance field describes the timing advance mode and timing advance value assigned to the mobile station.

Table 97: *Packet Timing Advance* information elements

< Packet Timing Advance IE > ::=
{ 0 | 1 < **TIMING_ADVANCE_VALUE** : bit (6) > }
{ 0 | 1 < **TIMING_ADVANCE_INDEX** : bit (4) >
< **TIMING_ADVANCE_TIMESLOT_NUMBER** : bit (3) > } ;

Table 98: Packet Timing Advance information element details

TIMING_ADVANCE_VALUE (6 bit field) If the TIMING_ADVANCE_VALUE field is present, the mobile station shall use the value contained therein after time defined in GSM 05.10. If the TIMING_ADVANCE_VALUE field is not present the mobile station shall not change its timing advance value. The Timing Advance value field is encoded the same as the Timing Advance value of the Timing Advance information element defined in GSM 04.08 **TIMING_ADVANCE_INDEX** (4 bit field) If the TIMING_ADVANCE_INDEX and TIMING_ADVANCE_TIMESLOT_NUMBER fields are present the mobile station shall begin operation of the Continuous Timing Advance procedure at the point in time denoted by the TBF starting time if present, otherwise after the reaction time specified in GSM 05.10.. If these two fields are not present the mobile station shall stop operation of the Continuous Timing Advance procedure. This information field is encoded as a binary representation of the Timing Advance Index defined in GSM 05.02. Range 0 to 15. **TIMING_ADVANCE_TIMESLOT_NUMBER** (3 bit field) This field indicates the timeslot assigned for Continuous Timing Advance operation on the PTCCH. This field is coded as the binary representation of the timeslot number as defined in GSM 05.10. Range 0 to 7

12.12a Global Packet Timing Advance

The Global Packet Timing Advance field describes the timing advance mode and timing advance value assigned to the mobile station for uplink and/or downlink TBF.

Table 99: *Global Packet Timing Advance* information elements

```
< Global Packet Timing Advance IE > ::=
        { 0 | 1 < TIMING_ADVANCE_VALUE : bit (6) > }
        { 0 | 1 < UPLINK_TIMING_ADVANCE_INDEX : bit (4) >
                < UPLINK_TIMING_ADVANCE_TIMESLOT_NUMBER : bit (3) > }
        { 0 | 1 < DOWNLINK_TIMING_ADVANCE_INDEX : bit (4) >
                < DOWNLINK_TIMING_ADVANCE_TIMESLOT_NUMBER : bit (3) > }
```

Table 100: Global Packet Timing Advance information element details

TIMING_ADVANCE_VALUE (6 bit field)
If the TIMING_ADVANCE_VALUE field is present, the mobile station shall use the value contained therein after time defined in GSM 05.10. If the TIMING_ADVANCE_VALUE field is not present the mobile station shall not change its timing advance value. The Timing Advance value field is encoded the same as the Timing Advance value of the Timing Advance information element defined in GSM 04.08

UPLINK_TIMING_ADVANCE_INDEX (4 bit field)
This field indicates the Timing Advance Index related to Uplink TBF. This information field is encoded as a binary representation of the Timing Advance Index defined in GSM 05.02.
Range 0 to 15.

UPLINK_TIMING_ADVANCE_TIMESLOT_NUMBER (3 bit field)
This field indicates the timeslot assigned for Continuous Timing Advance operation on the PTCCH related to Uplink TBF. This field is coded as the binary representation of the timeslot number as defined in GSM 05.10.
Range 0 to 7

DOWNLINK_TIMING_ADVANCE_INDEX (4 bit field)
This field indicates the Timing Advance Index related to Downlink TBF. This information field is encoded as a binary representation of the Timing Advance Index defined in GSM 05.02.
Range 0 to 15.

DOWNLINK_TIMING_ADVANCE_TIMESLOT_NUMBER (3 bit field)
This field indicates the timeslot assigned for Continuous Timing Advance operation on the PTCCH related to Downlink TBF. This field is coded as the binary representation of the timeslot number as defined in GSM 05.10.
Range 0 to 7

If Timing Advance Index and Timing Advance Timeslot Number are present for any of the TBFs already existing or to be established with this message, the mobile station shall begin operation of the Continuous Timing Advance procedure at the point in time denoted by the TBF starting time if present, otherwise within the reaction time specified in GSM 5.10.

If Timing Advance Index and Timing Advance Timeslot Number are not present for any of the TBFs already existing or to be established with this message, the mobile station shall stop operation of the Continuous Timing Advance procedure.

12.13 Power Control Parameters

The Power Control parameters information element contains parameters the mobile station shall use to determine its TX power level.

Table 101: *Power Control Parameters* information elements

```
< Power Control Parameters IE > ::=
    < ALPHA : bit (4) >
    { 0 | 1 < GAMMA_TN0 : bit (5) > }
    { 0 | 1 < GAMMA_TN1 : bit (5) > }
    { 0 | 1 < GAMMA_TN2 : bit (5) > }
    { 0 | 1 < GAMMA_TN3 : bit (5) > }
    { 0 | 1 < GAMMA_TN4 : bit (5) > }
    { 0 | 1 < GAMMA_TN5 : bit (5) > }
    { 0 | 1 < GAMMA_TN6 : bit (5) > }
    { 0 | 1 < GAMMA_TN7 : bit (5) > } ;
```

Table 102: *Power Control Parameters* information element details

ALPHA (4 bit field)
For encoding and description see the Global Power Control Parameters IE

GAMMA_TN0 (5 bit field)
GAMMA_TN1 (5 bit field)
GAMMA_TN2 (5 bit field)
GAMMA_TN3 (5 bit field)
GAMMA_TN4 (5 bit field)
GAMMA_TN5 (5 bit field)
GAMMA_TN6 (5 bit field)
GAMMA_TN7 (5 bit field)
The GAMMA_TN0..7 fields are the binary representation of the parameter Γ_{CH} for MS output power control in units of 2 dB, see GSM 05.08. GAMMA_TN0 contains the gamma value for timeslot number 0, GAMMA_TN1 contains the gamma value for timeslot number 1, etc. If this information element is also used to determine the timeslot allocation for an uplink TBF, for each timeslot, the presence of the GAMMA value indicates that the timeslot is assigned, and the absence of the GAMMA value indicates that the timeslot is not assigned (see subclause 12.18). The GAMMA_TN0..7 field is coded according to the following table:

bit 5 4 3 2 1	
0 0 0 0 0	Γ_{CH} = 0 dB
0 0 0 0 1	Γ_{CH} = 2 dB
: : : :	
1 1 1 1 0	Γ_{CH} = 60 dB
1 1 1 1 1	Γ_{CH} = 62 dB

12.14 PRACH Control Parameters

The purpose of the PRACH Control Parameters information element is to provide parameters used to control the PRACH utilization.

Table 103: *PRACH Control Parameters* information elements

< PRACH Control Parameters IE > ::=
< **ACC_CONTR_CLASS** : bit (16) >
< **MAX_RETRANS** : bit (2) > * 4
< **S** : bit (4) >
< **TX_INT** : bit (4) >
{ 0 | 1 < **PERSISTENCE_LEVEL** : bit (4) > * 4 } ;

Table 104: *PRACH Control Parameters* information element details

TX_INT (4 bit field)
Number of slots to spread transmission of the random access. The field is coded according to the following table:

bit 4 3 2 1	
0 0 0 0	2slots used to spread transmission
0 0 0 1	3 slots used to spread transmission
0 0 1 0	4 slots used to spread transmission
0 0 1 1	5 slots used to spread transmission
0 1 0 0	6 slots used to spread transmission
0 1 0 1	7 slots used to spread transmission
0 1 1 0	8 slots used to spread transmission
0 1 1 1	9 slots used to spread transmission
1 0 0 0	10 slots used to spread transmission
1 0 0 1	12 slots used to spread transmission
1 0 1 0	14 slots used to spread transmission
1 0 1 1	16 slots used to spread transmission
1 1 0 0	20 slots used to spread transmission
1 1 0 1	25 slots used to spread transmission
1 1 1 0	32 slots used to spread transmission
1 1 1 1	50 slots used to spread transmission

S (4 bit field)
S is a parameter used for calculation of the minimum number of slots between two successive Channel request messages. The field is coded according to the following table:

bit 4 3 2 1	
0 0 0 0	S = 12
0 0 0 1	S = 15
0 0 1 0	S = 20
0 0 1 1	S = 30
0 1 0 0	S = 41
0 1 0 1	S = 55
0 1 1 0	S = 76
0 1 1 1	S = 109
1 0 0 0	S = 163
1 0 0 1	S = 217

All other values reserved.

MAX_RETRANS (2 bit field for each Radio Priority 1..4)
Indicates for each Radio Priority level 1 to 4 the maximum number of retransmissions allowed. Radio Priority 1 represents the highest priority. The field is coded with two bits per Radio Priority level according to the following table where the first two bits refer to Radio Priority 1, the second two bits to Radio Priority 2, etc.:

bit
2 1
0 0 1 retransmission allowed
0 1 2 retransmissions allowed
1 0 4 retransmissions allowed
1 1 7 retransmissions allowed

PERSISTENCE_LEVEL (4 bit field for each Radio Priority 1..4)
The PERISTENCE_LEVEL field indicates the values of the access persistence level P(i) for each Radio Priority i (i = 1..4) where Radio Priority 1 represents the highest Radio Priority of an LLC PDU to be transmitted.

bits
4 3 2 1
0 0 0 0 persistence level 0
0 0 0 1 persistence level 1
0 0 1 0 persistence level 2
0 0 1 1 persistence level 3
0 1.0.0 persistence level 4
: : :
1 1 1 0 persistence level 14
1 1 1 1 persistence level 16

ACC_CONTR_CLASS (16 bit field)
Access Control Class N (bit 1-16) (see octet 3 and 4 of the RACH Control Parameters IE in GSM 04.08) . For a mobile station with Access Control Class =N access is not barred if the Access Control Class N bit is coded with a '0'; N = 0, 1,....9,11,...,15. Bit 11= the EC bit is the Emergency Call Allowed coded as specified in GSM 04.08.

Bits:	16	15	14	13	12	11	10	9	8	7	6	5	4	3	2	1
Class N:	15	14	13	12	11	EC	9	8	7	6	5	4	3	2	1	0

12.15 Temporary Flow Identity (TFI)

The Temporary Flow Identity (TFI) uniquely identifies either a single uplink Temporary Block Flow (TBF) or a single downlink Temporary Block Flow (TBF).

Table 105: *UPLINK_TFI* information element details

UPLINK_TFI (5 bit field) The Temporary Flow Identity field identifies an uplink Temporary Block Flow (TBF). This field is encoded as a binary number. Range 0 to 31

Table 106: *DOWNLINK_TFI* information element details

DOWNLINK_TFI (5 bit field) The Temporary Flow Identity field identifies a downlink Temporary Block Flow (TBF). This field is encoded as a binary number. Range 0 to 31

12.16 Temporary Logical Link Identity (TLLI)

The Temporary Logical Link Identity (TLLI) is associated with the GPRS subscriber. TLLI is defined in GSM 03.03.

Table 107: *TLLI* information element details

TLLI (32 bit field) The TLLI field is encoded as a binary number. Range 0 to 4294967295

12.17 Temporary Queueing Identifier (TQI)

The Temporary Queueing Identifier (TQI) field identifies a mobile station during the queueing procedure. The contents of this field are operator defined.

Table 108: *TQI* information element details

TQI (16 bit field) The Temporary Queueing Identifier field is an unformatted field.

12.18 TIMESLOT_ALLOCATION

The TIMESLOT_ALLOCATION field indicates the timeslots for use during a TBF or the timeslots carrying a PCCCH.

Table 109: *TIMESLOT_ALLOCATION* information element details

TIMESLOT_ALLOCATION (8 bit field) This information field indicates the timeslots assigned for use during the TBF or the timeslots carrying a PCCCH. Bit 8 indicates the status of timeslot 0, bit 7 indicates the status of timeslot 1, etc. At least one timeslot must be assigned. 0 Timeslot is not assigned 1 Timeslot is assigned

12.19 TS_OVERRIDE

The TS_OVERRIDE field indicates the timeslots whose allocation should be overridden during a TBF.

Table 110: *TS_OVERRIDE* information element details

TS_OVERRIDE (8 bit field)
This information field indicates which the timeslots whose allocation should be overridden. The override applies for one repeated allocation. Bit 8 indicates the status of timeslot 0, bit 7 indicates the status of timeslot 1, etc. The MS shall ignore any bit in the TS_OVERRIDE field whose corresponding bit in the previous timeslot allocation for the uplink TBF is set to '0'.

0 The mobile shall use the ALLOCATION_BITMAP to determine in which radio blocks it shall transmit on the timeslot during the allocation
1 The mobile shall transmit in all uplink blocks of the timeslot during the allocation

12.20 PAGE_MODE

The PAGE_MODE field controls the action of the mobile station belonging to the paging subgroup corresponding to the paging subchannel.

Table 111 : *PAGE_MODE information element details*

PAGE_MODE (2 bit field)

bit

2 1	value
0 0	Normal Paging
0 1	Extended Paging
1 0	Paging Reorganization
1 1	Same as before

12.21 Starting Frame Number Description

There are two types of encoding for this IE : Relative Frame Number or Absolute Frame Number.

Table 112: *Starting Frame Number Description* information element

```
< Starting Frame Number Description IE > ::=
    { 0 < Absolute Frame Number Encoding >
    | 1 < Relative Frame Number Encoding > } ;
```

If the mobile station is in packet transfer mode during the block immediately before the starting time and the lowest numbered PDCH assigned to the MS is different immediately before and after the starting time then the mobile station shall be ready to receive or transmit no later than one radio block from the starting time (see GSM 05.02).

12.21.1 Absolute Frame Number Encoding

In this case, the field is encoded as the 16-bit Starting Time IE defined in GSM 04.08, and the value of the Starting FN is obtained directly.

If the Starting FN is not aligned to the start of a block period and the mobile station is in packet transfer mode during the TDMA immediately before the Starting FN, then the mobile station shall align the starting time to the next block boundary and continue to use the currently assigned allocation upto the next block boundary.

12.21.2 Relative Frame Number Encoding

In this case, the field indicates the delay, relative to the first TDMA frame (N) of the RLC/MAC block containing the Starting Time field, before the assigned or requested resource becomes valid.

The value of this field is the 13-bit binary representation of the integer k, from which the offset to be applied to N can be derived.

The value of the Starting Frame Number is :

N + 4 + 4 k + (k div3), N + 5 + 4k + (k div3) (note 1)for (k mod 3) = 0,

and (k mod 3) = 1

$0 \leq k \leq 8191$

N + 5 + 4 k + (k div3) for (k mod 3) = 2

Example:

	Starting Frame Number Description (13-bit field)	
k = 1	0000000000001	block with first TDMA frame number = N+8 or N+9
k = 2	0000000000010	block with first TDMA frame number = N+13
k = 3	0000000000011	block with first TDMA frame number = N+17 or N+18

NOTE 1 : In these cases, only one of the frame numbers N+4+4k+kdiv3 or N+5+4k+kdiv3 is valid, because the other corresponds to an idle frame, depending on the position of the block in the multi-frame.

NOTE 2 : The value of (k+1) gives the number of relative blocks. The maximum number of relative blocks is therefore 8192 ; this value was chosen according to the interval of time encoded by the Starting Time IE in GSM 04.08 (32024 frames).

NOTE 3 : The value (k=0) should not be used, so as to leave time for the MS to analyse the message and get ready to receive or transmit.

12.22 Spare

12.23 Cell Identification

The *Cell Identification* information element is used to uniquely identify the cell.

Table 113: *Cell Identification* information element

```
< Cell Identification IE > ::=
    < Location Area Identification IE : octet (5) >          -- GSM 04.08
    < RAC : bit (8) >
    < Cell Identity IE : octet (2) > ;                       -- GSM 04.08
```

Table 114: *Cell Identification* information element details

Location Area Identity IE (5 octet field)
This field is coded using the V format of the type 3 information element *Location Area Identification* defined in GSM 04.08.

RAC (8 bit field)
This field is the binary representation of the Routing Area Code, see GSM 03.03.

Cell Identity IE (2 octet field)
This field is coded using the V format of the type 3 information element *Cell Identity* defined in GSM 04.08.

12.24 GPRS Cell Options

The *GPRS Cell Options* information element is used to control a set of cell options related to GPRS.

This information element may include a nested *Extension Bit* information element to allow future extension of cell option parameters.

Table 115: *GPRS Cell Options* information element

```
< GPRS Cell Options IE > ::=
    < NMO : bit (2) >
    < T3168 : bit (3) >
    < T3192 : bit (3) >
    < DRX_TIMER_MAX : bit (3) >
    < ACCESS_BURST_TYPE : bit >
    < CONTROL_ACK_TYPE : bit >
    < BS_CV_MAX : bit (4) >
    { 0 | 1 < PAN_DEC : bit (3) >
            < PAN_INC : bit (3) >
            < PAN_MAX : bit (3) > }
        -- Possible future extension:
    { 0 | 1  < Extension Bits IE > } ;              -- subclause 12.26
```

Table 116: *GPRS Cell Options* information element details

NMO (2 bit field)
This field is the binary representation of the Network Mode of Operation, see GSM 03.60:

bit 2 1	
0 0	Network Mode of Operation I
0 1	Network Mode of Operation II
1 0	Network Mode of Operation III
1 1	Reserved.

T3168 (3 bit field)
This field is the binary representation of the timeout value of timer T3168. Range: 0 to 7. The timeout value is given as the binary value plus one in units of 500millisecond.

T3192 (3 bit field)
This field is the binary representation of the timeout value of timer T3192. Range: 0 to 7. The timeout value is given in the following table. In the case of 0 msec, the timer is not started and the mobile station follows procedures defined in 9.3.2.5 and 9.3.3.5:

bit 3 2 1	
0 0 0	500 msec
0 0 1	1000 msec
0 1 0	1500 msec

0 1 1	0 msec
1 0 0	80 msec
1 0 1	120 msec
1 1 0	160 msec
1 1 1	200 msec

DRX_TIMER_MAX (3 bit field)
This field is the binary representation of the parameter DRX_TIMER_MAX. Range: 0 to 7. The parameter value is given as two taken to the power of the binary value minus one ($2^{(bv - 1)}$) in units of 1 second. The binary value zero indicates the parameter value zero (i.e, the parameter takes the values: 0, 1 s, 2 s, 4 s, .. 64 s.)

ACCESS_BURST_TYPE (1 bit field)
The ACCESS_BURST_TYPE field indicates if 8 or 11 bit access burst shall be used on PRACH, PTCCH/U and in the PACKET CONTROL ACKNOWLEDGMENT message when the format is four access bursts. The field is coded according to the following table:

0 8 bit access burst shall be used
1 11 bit access burst shall be used

CONTROL_ACK_TYPE (1 bit field)
This field is the binary representation of the default format of the PACKET CONTROL ACKNOWLEDGMENT message:

0 default format is four access bursts
1 default format is RLC/MAC control block.

BS_CV_MAX (4 bit field)
This field is the binary representation of the parameter BS_CV_MAX. Range: 0 to 15. The value BS_CV_MAX=0 shall be interpreted as value BS_CV_MAX=1 for calculation of T3198, T3200 and N3104max values.

PAN_DEC (3 bit field)
This field is the binary representation of the parameter PAN_DEC. Range: 0 to 7.

PAN_INC (3 bit field)
This field is the binary representation of the parameter PAN_INC. Range: 0 to 7.

PAN_MAX (3 bit field)
This field defines the maximum value allowed for counter N3102.

bit 3 2 1	
0 0 0	maximum value allowed for counter N3102 is 4
0 0 1	maximum value allowed for counter N3102 is 8
. . .	
1 1 1	maximum value allowed for counter N3102 is 32

12.25 PCCCH Organization Parameters

The *PCCCH Organization Parameters* information element is used to control the organization of PCCCHs present in the cell. This information element contains general PCCCH organization parameters.

Table 117: *PCCCH Organization Parameters* information element

< PCCCH Organization Parameters IE > ::=
< **BS_PCC_REL** : bit >
< **BS_PBCCH_BLKS** : bit (2) >
< **BS_PAG_BLKS_RES** : bit (4) >
< **BS_PRACH_BLKS** : bit (4) > ;

Table 118: *PCCCH Organization Parameters* information element details

BS_PCC_REL (1 bit field) The BS_PCC_REL field indicates if set = 1 that the last PDCH carrying PCCCH and PBCCH will be released shortly. All mobile stations on PCCCH shall then as soon as this information has been received return to CCCH and there obey the information sent on BCCH as specified in GSM 04.08. If the field is set = 0, no channel release is pending. **BS_PBCCH_BLKS** (2 bit field) The BS_PBCCH_BLKS field indicates the number of blocks allocated to the PBCCH in the multiframe. The field is coded as the binary representation of BS_PBCCH_BLKS as defined in GSM 05.02 minus 1. **BS_PAG_BLKS_RES** (4 bit field) The BS_PAG_BLKS_RES field indicates the number of blocks on each PDCH carrying the PCCCH per multiframe where neither packet paging nor PBCCH should appear. This number corresponds therefore to the number of blocks reserved for PAGCH, PDTCH and PACCH. (See GSM 05.02). The field is coded as the binary representation of BS_PAG_BLKS_RES as defined in GSM 05.02. Range: 0-12. All other values are reserved and shall be interpreted as the default value 0. **BS_PRACH_BLKS** (4 bit field) The BS_PRACH_BLKS field indicates the number of blocks reserved in a fixed way to the PRACH channel on any PDCH carrying PCCCH (see GSM 05.02). The field is coded as the binary representation of BS_PRACH_BLKS as defined in GSM 05.02. Range: 0-12. All other values are reserved and shall be interpreted as no Block reserved for PRACH.

12.26 Extension Bits IE

The *Extension Bits* information element is used to provide a generalized means for possible future extension within a message. This information element is variable length and contains the length indicator and spare bits.

Table 119: *Extension Bits* information element

< Extension Bits IE > ::=
< **extension length** : bit (6) >
< spare bit (val(extension length)+1) > ;

12.27 Non GPRS Cell Options IE

The *Non GPRS Cell Options IE* is used to provide mobile stations operating in mode A or B with a repeated subset of BCCH information required for entering dedicated, group receive or group transmit mode.

Table 120: *Non GPRS Cell Options* information element

< Non GPRS Cell Options IE > ::=	
< **ATT** : bit >	*-- Attach/Detach allowed*
{ 0 | 1 < **T3212** : bit (8) > }	*-- Time-out value for periodic update*
< **NECI** : bit >	*-- Half rate support*
< **PWRC** : bit >	*-- Power Control indicator*
< **DTX** : bit (2) >	*-- DTX indicator*
< **RADIO-LINK-TIMEOUT** : bit (4) >	*-- Supervisory timer for RR connection*
< **BS-AG-BLKS-RES** : bit (3) >	*-- number of blocks reserved for access grant*
< **CCCH-CONF** : bit (3) >	*-- physical channel configuration for CCCH*
< **BS-PA-MFRMS** : bit (3) >	*-- number of 51 multiframes between*
	-- transmission of paging messages
< **MAX-RETRANS** : bit (2) >	*-- maximum number of retransmissions*
< **TX-INTEGER** : bit (4) >	*-- number of slots to spread transmission*
< **EC** : bit >	*-- emergency call allowed*
< **MS-TXPWR-MAX-CCCH** : bit (5) >	*-- maximum Tx power level*
	-- Possible future extension:
{ 0 | 1 < Extension Bits IE > } ;	*-- subclause 12.26*

Table 121: *Non GPRS Cell Options* information element details

For detailed descriptions of all elements see GSM 04.08
If the optional T3212 parameter is not included, no periodic updating shall be performed.

13 Timers and counters

The tables in clause 13.1 and 13.2 specifies the timers used in RLC/MAC protocol signalling. The denotation of columns is defined as follows:

timer ::= name of the timer;

started ::= under which conditions the timer is started;

stopped ::= under which conditions the timer is stopped;

action at expiry ::= which actions the GPRS entity shall perform at expiry;

value ::= the duration between setting the timer and expiry of the timer ("s" denotes "second(s)" "xx - yy" means that any value between xx and yy is permitted).

13.1 Timers on the Mobile Station side

Table 122: Specification of timers used in GPRS on the Mobile Station side

timer	started	stopped	action at expiry	value
T3158	Started when ordered by a NETWORK_CONTROL_ORDER and then restarted each time a Network Controlled (NC) Measurement is performed in MM Ready state and in packet idle or packet transfer mode	See 05.08	Restart the timer, perform the measurement and send a NC Measurement report. The timer shall be restarted with either of the parameters NC_REPORTING_PERIOD_I when in packet idle mode or with the parameter NC_REPORTING_PERIOD_T when in packet transfer mode	Defined by the parameter or by a random value (see GSM 05.08)
T3162	On receipt of a PACKET QUEUING NOTIFICATION.	On receipt of a PACKET UPLINK ASSIGNMENT	Abort Packet access procedure; indicate Packet access failure to upper layers and Return to packet idle mode listening to its paging subchannel	5 sec
T3164	On receipt of a PACKET UPLINK ASSIGNMENT	At sending of the first RLC/MAC block	See subclause 7.1.4.	5 sec
T3166	At sending of the first RLC/MAC block at one phase access	On receipt of a PACKET UPLINK ACK/NACK	Immediately stop transmitting on the assigned TBF; a TBF establishment failure has occurred or the contention resolution procedures has failed	5 sec
T3168	At sending the PACKET RESOURCE REQUEST message or Channel Request Description IE in PACKET DOWNLINK ACK/NACK	On receipt of a PACKET UPLINK ASSIGNMENT message	Reinitiate the packet access procedure or retransmit the PACKET RESOURCE REQUEST or PACKET DOWNLINK ACK/NACK	assigned in system information
T3170	After having made M + 1 attempts to send a PACKET CHANNEL REQUEST message, or on receipt of a PACKET ACCESS REJECT message.	On receipt of a PACKET UPLINK ASSIGNMENT or PACKET QUEUING NOTIFICATION message	Abort Packet access procedure, indicate Packet access failure to upper layer and return to Packet Idle mode	Defined by parameters TX_INT and S
T3172	On receipt of a PACKET ACCESS REJECT message	On receipt of a PACKET UPLINK ASSIGNMENT message	Packet Access in the cell no longer prohibited	assigned in message
T3174	On receipt of a PACKET CELL CHANGE ORDER message	On receipt of a response to CHANNEL REQUEST or PACKET CHANNEL REQUEST in the new cell	Return to old cell and send PACKET CELL CHANGE FAILURE	15 sec
T3176	Expiry of T3174	After sending of PACKET CELL CHANGE FAILURE message	Stop cell change order failure procedure.	5 sec

timer	started	stopped	action at expiry	value
T3178	Started when ordered by a EXT_MEASUREMENT_ORDER and then restarted each time an extended (EXT) Measurement is performed in packet idle mode	See 05.08	Restart the timer, perform the measurement and send an EXT Measurement report. The timer shall be restarted with the parameter EXT_REPORTING_PERIOD	Defined by the parameter or by a Random value (see GSM 05.08)
T3180	When transmitting an RLC/MAC block to the network	When detecting an assigned USF value on assigned PDCH	Perform Abnormal release with random access procedure	5 sec
T3182	After sending the last data block (with CV = 0), or Upon detecting a transmit window stall condition	On receipt of the PACKET UPLINK ACK/NACK message	Abnormal release with random access	5 sec
T3184	On receipt of a PACKET UPLINK ACK/NACK message	On receipt of PACKET UPLINK ACK/NACK message (T3184 is also restarted)	Abnormal release with random access	5 sec
T3186	When packet access procedure is started	Stopped when receiving any message from the network in response to the PACKET CHANNEL REQUEST message or after M+1 attempts to send PACKET CHANNEL REQUEST messages on the PRACH channel	Abort Packet access procedure; indicate Packet access failure to upper layers and return to Packet Idle mode.	5 sec
T3188	If a new fixed allocation has been requested, when all data has been sent on the assigned allocation	On receipt of PACKET UPLINK ASSIGNMENT, PACKET UPLINK ACK/NACK message containing a fixed allocation, or PACKET ACCESS REJECT	Resend the last allocation request if it needs more data to complete the TBF	5 sec
T3190	At reception of a downlink assignment message	Restarted on receipt of data on the resources	Abnormal release with return to CCCH or PCCCH	5 sec
T3192	At sending the PACKET DOWNLINK ACK/NACK with the Final Ack Indicator=1, or at sending the PACKET CONTROL ACK as a response to final RLC data block in unacknowledged mode.	Restarted at sending the PACKET DOWNLINK ACK/NACK with the Final Ack Indicator=1, or at sending the PACKET CONTROL ACK as a response to final RLC data block in unacknowledged mode. Stopped at the reception of a PACKET DOWNLINK ASSIGNMENT or PACKET TIMESLOT RECONFIGURE.	Release the resources, stop monitoring the PDCHs, and begin to monitor the paging channel	assigned in system information
T3198	When transmitting RLC data block	none	Accept negative acknowledgement for RLC data block	see clause 9.1.3
T3200	On receipt of an RLC/MAC control block containing a segment of an RLC/MAC control message	On receipt of an RLC/MAC control block containing a segment of an RLC/MAC control message such that the mobile station now has the complete control message	Discard and ignore all segments of the partially received RLC/MAC control message	see clause 9.1.11b

T3158: Wait for sending measurement reports for network controlled cell reselection.

This timer is used on the mobile station side to define the period for performing NC-measurements and send measurement reports in either packet idle or packet transfer mode (see GSM 05.08).

T3162: Wait for Packet Uplink Assignment after reception of Packet Queuing Notification

This timer is used on the mobile station side after received Packet Queuing Notification to define when to stop waiting for a Packet Uplink Assignment.

T3164: Wait for Uplink State Flag After Assignment

This timer is used on the mobile station side to define when to stop waiting for the USF determining the assigned portion of the uplink channel and repeat the procedure for random access. In multislot operation, it is enough that the assigned USF is noted on one of the uplink PDCHs. This timer is not used when fixed allocations are assigned.

T3166: Wait for Packet Uplink ACK/NACK after sending of first data block

This timer is used on the mobile station side to define when to stop waiting for a Packet Uplink ACK/NACK after sending of the first data block.

T3168: Wait for Packet Uplink Assignment message

This timer is used on the mobile station side to define when to stop waiting for a Packet Uplink Assignment message after sending of a Packet Resource request message.

T3170: Wait for Packet Uplink Assignment after having done (M+1) Packet Channel Requests or after reception of a PACKET ACCESS REJECT message.

This timer is used on the mobile station side when having made M + 1 attempts to send a Packet Channel Request or after reception of a PACKET ACCESS REJECT message. At expiry of timer T3170, the mobile station shall abort the packet access procedure, indicate a packet access failure to upper layer and return to packet idle mode.

The value of this timer is equal to the time taken by T+2S TDMA frames. T and S are defined in subclause 7.1.2.1.1.

T3172: Prohibit packet access in the cell after Packet Access Reject message has been received.

This timer is used on the mobile station side on receipt of a Packet Access Reject message corresponding to one of the mobile station's 3 last Packet Channel Request messages.

After T3172 expiry packet Access is no longer prohibited in the cell but no Channel Request message shall be sent as a response to a page until a Paging Request message for the mobile station is received.

T3174: Wait for response on new cell after Packet Cell Change Order .

This timer is used on the mobile station side on receipt of a PACKET CELL CHANGE ORDER message. The timer is stopped upon successful access on the new cell. On expiry, the mobile station returns to the old cell and send PACKET CELL CHANGE FAILURE message.

T3176: Stop Cell Change failure procedure .

This timer started when T3174 expires. The timer is stopped upon transmission of the PACKET CELL CHANGE FAILURE message. On expiry, the mobile station stops attempting to send the PACKET CELL CHANGE FAILURE message.

T3178: Wait for sending extended measurement reports.

This timer is used on the mobile station side to define the period for performing extended measurements and send extended measurement reports in packet idle mode (see GSM 05.08).

T3180: Wait for Uplink State Flag After Data Block

This timer is used on the mobile station side to define when to stop waiting for the USF determining the assigned portion of the uplink channel after the pervious RLC/MAC block is sent. In multislot operation, it is enough that the assigned USF is noted on one of the uplink PDCHs. If expired, the mobile station repeats the procedure for random access. This timer does not apply to fixed allocation transfers.

T3182: Wait for Acknowledgement

This timer is used on the mobile station side to define when to stop waiting for temporary Packet Uplink Ack/Nack after the last RLC data block has been sent for the current send window or for the entire Temporary Block Flow.

T3184: No Ack/Nack Received

This timer is used on the mobile station side to decide when to stop waiting for a Packet Uplink Ack/Nack. (This timer does not apply to mobiles performing a dynamic allocation transfer).

T3186: Supervision of the random access procedure

This timer is used on the mobile station side to define the maximum allowed time to repeat the sending of all PACKET CHANNEL REQUEST messages. At expiry of timer T3186, the Packet Uplink establishment procedure is aborted.

T3188: Allocation Exhausted

This timer is used on the mobile station side to decide when to stop waiting to receive additional resources from the network. (This timer does not apply to a mobile performing a dynamic allocation transfer).

T3190: Wait for Valid Downlink Data Received from the Network

This timer is used on the mobile station side to stop waiting for the valid data from the network side either following the initial Packet Downlink Assignment or after some previous downlink RLC/MAC block.

T3192: Wait for release of the TBF after reception of the final block

This timer is used on the mobile station side when the mobile station has received all of the RLC data blocks. When timer T3192 expires the mobile station shall release the resources associated with the TBF (e.g. TFI) and begin to monitor its paging channel.

T3198: RLC timer

T3198 is an array of 64 timers used by the mobile station to control when it will accept a negative acknowledgement for an RLC data block.

T3200 RLC/MAC control message reassembly guard

T3200 is used by the mobile station to control when it will discard segments of a partially received RLC/MAC control message. The mobile station shall have one instance of timer T3200 for each segmented RLC/MAC control message that the mobile station is capable of receiving in parallel.

13.2 Timers on the network side

Table 123: Specification of timers used in GPRS on the Network side

timer	started	stopped	action at expiry	typical value
T3169	If counter N3101 = N3101_MAX, or if counter N3103 = N3103_MAX	none	The network releases USF and TFI resources.	5 sec
T3191	When the last RLC data block is sent with the FBI bit set to '1'	When the final PACKET DOWNLINK ACK/NACK or PACKET CONTROL ACKNOWLEDGEMENT is received Restarted at the transmission of an RLC data block with the FBI bit set to '1'.	The network releases TFI resource.	5 sec
T3193	When the final PACKET DOWNLINK ACK/NACK or PACKET CONTROL ACKNOWLEDGEMENT is received	When the network establishes a new downlink TBF.	The network releases TFI resource	greater than T3192
T3195	If counter N3105 = N3105_MAX	None	The network releases TFI resources.	5 sec

T3169: Wait for Reuse of USF and TFI after the mobile station uplink assignment is invalid

This timer is used on the network side to define when the current uplink assignment is surely invalid on the mobile station side so that the assigned USF(s) and TFI can be reused on the uplink. During that period the corresponding USF(s) is not broadcast. The value for T3169 is > T3180.

Its value is network dependent.

T3191: Wait for reuse of TFI after sending of the last RLC Data Block

This timer is used on the network side to define when the current assignment is surely invalid on the mobile station side so that the TFI can be reused.

Its value is network dependent.

T3193: Wait for reuse of TFI after reception of the final Packet Downlink Ack/Nack from the mobile station.

This timer is used on the network side to define when timer T3192 on the mobile station side has surely expired so that the TFI can be reused.

Its value is network dependent.

T3195: Wait for reuse of TFI when there is no response from the MS (radio failure or cell change)

This timer is used on the network side to define when the current assignment is surely invalid on the mobile station side so that the TFI can be reused.

Its value is network dependent.

13.3 Counters on the Mobile Station side

N3102 At each cell reselection the mobile station shall set the counter N3102 to the value defined by the optional broadcast parameter PAN_MAX. Whenever the mobile station receives a Packet Ack/Nack that allows the advancement of V(S), the mobile station shall increment N3102 by the broadcast value PAN_INC, however N3102 shall never exceed the value PAN_MAX. Each time T3182 expires the mobile station shall decrement N3102 by the broadcast value PAN_DEC. When N3102 ≤ 0 is reached, the mobile station shall perform an abnormal release with cell re-selection.

N3104 When the mobile station sends the first RLC/MAC block the counter N3104 shall be initialized to 1. For each new RLC/MAC block the mobile station sends it shall increment N3104 by 1 until the first correct PACKET UPLINK ACK/NACK message is received. Then N3104 shall not be further incremented. If the N3104 counter is equal to N3104_MAX and no correct PACKET UPLINK ACK/NACK message has been received, the contention resolution fails and the mobile station behaves as specified in subclause 7.1.2.3.

N3104_MAX shall have the value:

N3104_MAX = 3 * (BS_CV_MAX + 3) * number of uplink timeslots assigned.

13.4 Counters on the Network side

N3101: When the network after setting USF, receives a valid data block from the mobile station, it will reset counter N3101. The network will increment counter N3101 for each USF for which no data is received. N3101max shall be greater than 8.

N3103: N3103 is reset when transmitting the final PACKET UPLINK ACK/NACK message within a TBF (final ack indicator set to 1). If the network does not receive the PACKET CONTROL ACKNOWLEDGEMENT message in the scheduled block, it shall increment counter N3103 and retransmit the PACKET UPLINK ACK/NACK message. If counter N3103 exceeds its limit, the network shall start timer T3169.

N3105: When the network after sending a RRBP field in the downlink RLC data block , receives a valid RLC/MAC control message from the mobile station, it will reset counter N3105. The network will increment counter N3105 for each allocated data block for which no RLC/MAC control message is received. The value of N3105max is network dependent.

Annex A (informative): Bibliography

1) ITU-T I.130, Method for the Characterization of Telecommunication Services Supported by an ISDN
2) ITU-T Q.65, Stage 2 of the Method for Characterization of the Services Supported by an ISDN
3) DIS 8886, OSI Data Link Service Definition
4) DIS 10022, OSI Physical Service Definition
5) ISO 10039, Medium Access Control Service Definition
6) ISO 4335, HDLC Procedures
7) ISO 7478, Multilink Procedures
8) ISO 7498, OSI Basic Reference Model and Layer Service Conventions

Annex B (informative): RLC data block encoding

B.1 Example 1

Figure B.1 provides an example of the use of the Length indicator in conjunction with the M and E bits. In the example, LLC PDU 1 continues from a previous RLC data block and ends in the RLC data block shown. LLC PDU 2 follows LLC PDU 1 and is completely contained within the RLC data block. LLC PDU 3 follows LLC PDU 2, beginning in the RLC data block shown, and continues into the next RLC data block.

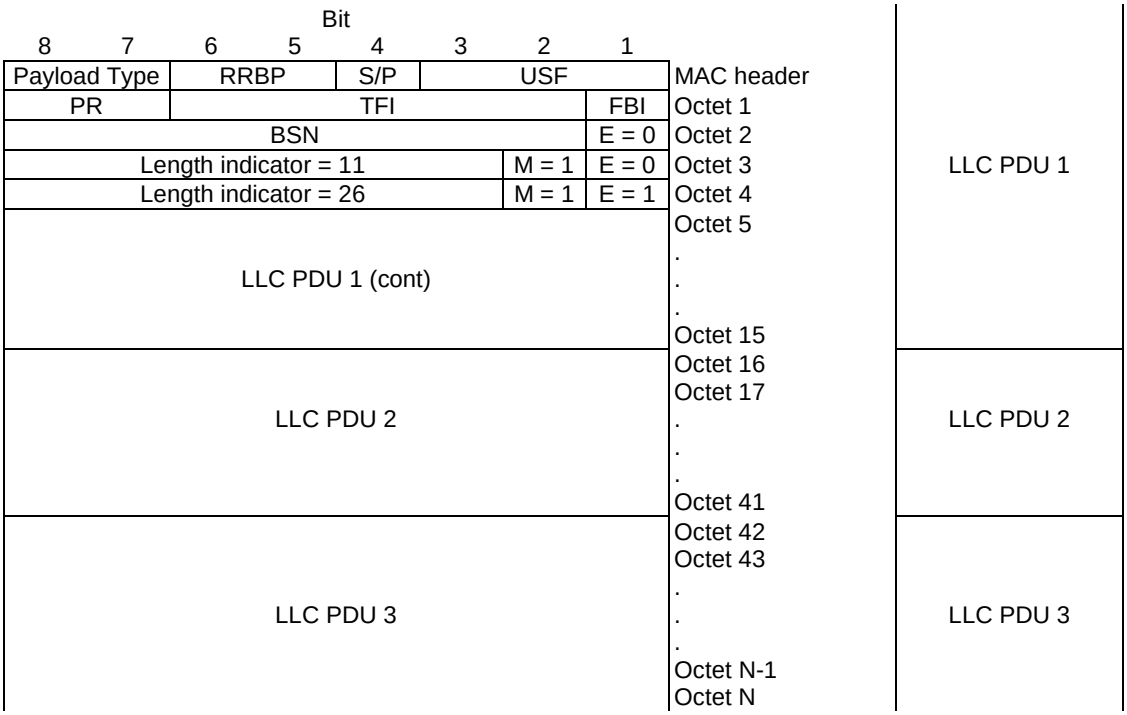

Figure B.1: Length indicator (LI) example

B.2 Example 2

Figure B.2 provides an example of the use of the Length indicator when the end of an LLC PDU would fit within an RLC data block but the addition of the length indicator octet (to indicate the LLC PDU boundary) causes the LLC PDU to extend into another RLC data block. In the example, LLC PDU 1 continues from a previous RLC data block and has 20 remaining octets. The first 19 octets are placed into RLC data block N, the Length Indicator is set to 0 (to indicate that the LLC PDU does not end within the current RLC data block), and the 20th octet is placed in RLC data block N+1.

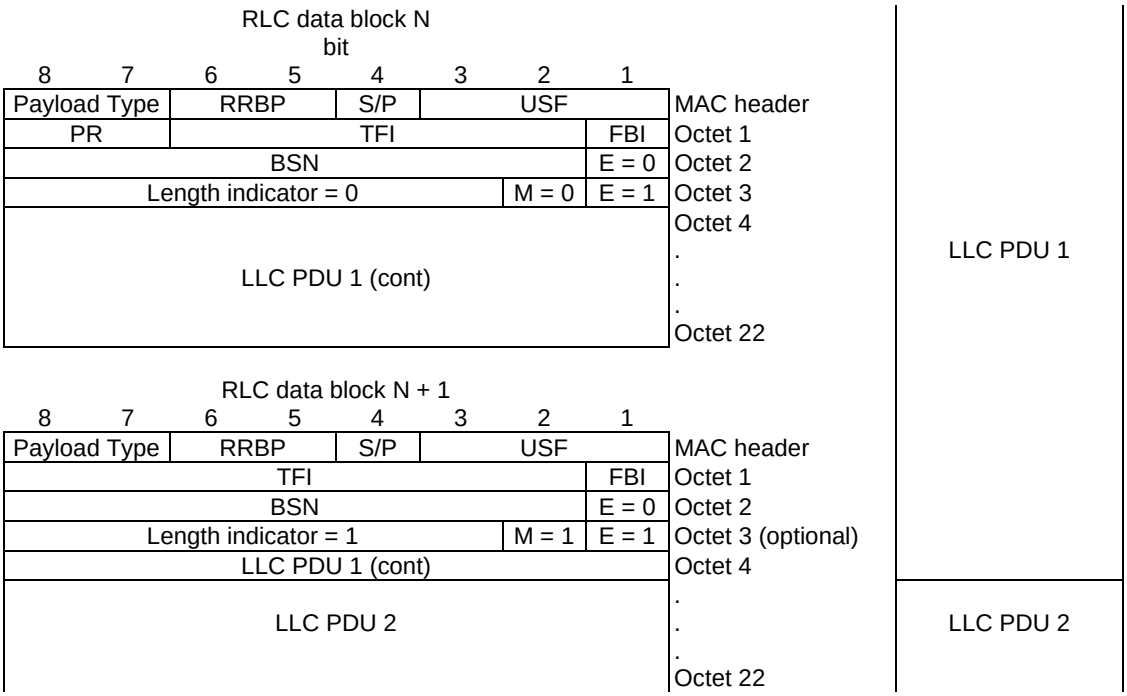

Figure B.2: Length indicator (LI) example

B.3 Example 3

Figure B.3 provides an example of the use of the Length indicator when the end of an LLC PDU fits precisely into an RLC data block. In the example, LLC PDU 1 continues from a previous RLC data block and ends in the RLC data block shown. LLC PDU 2 follows LLC PDU 1 and fills precisely the RLC data block shown.

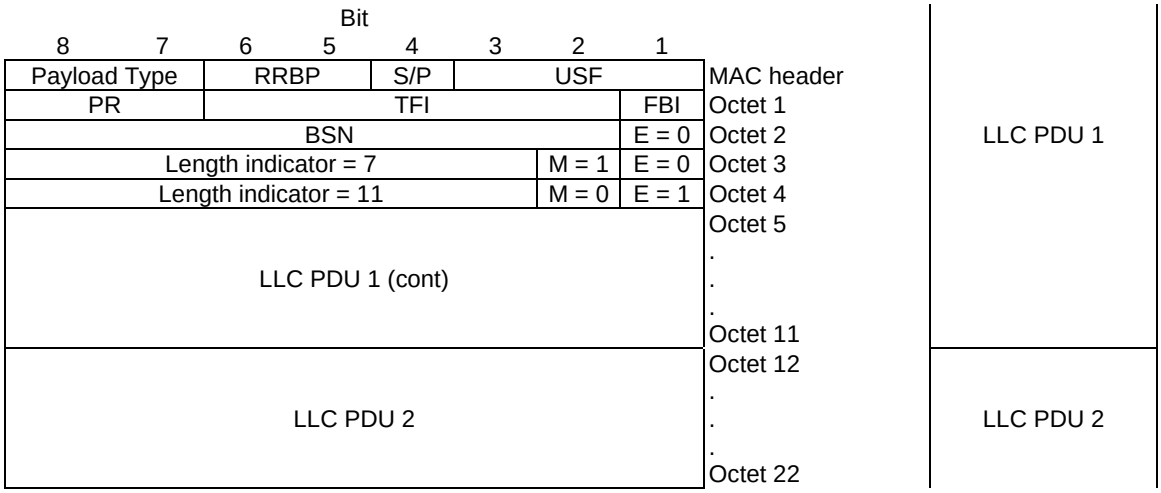

Figure B.3: Length indicator (LI) example

B.4 Example 4

Figure B.4 provides an example when the Length indicator is not used. As the example does not contain any LLC frame boundaries, no Length Indicator octets are needed. 20 octets is used for LLC data in each RLC data block.

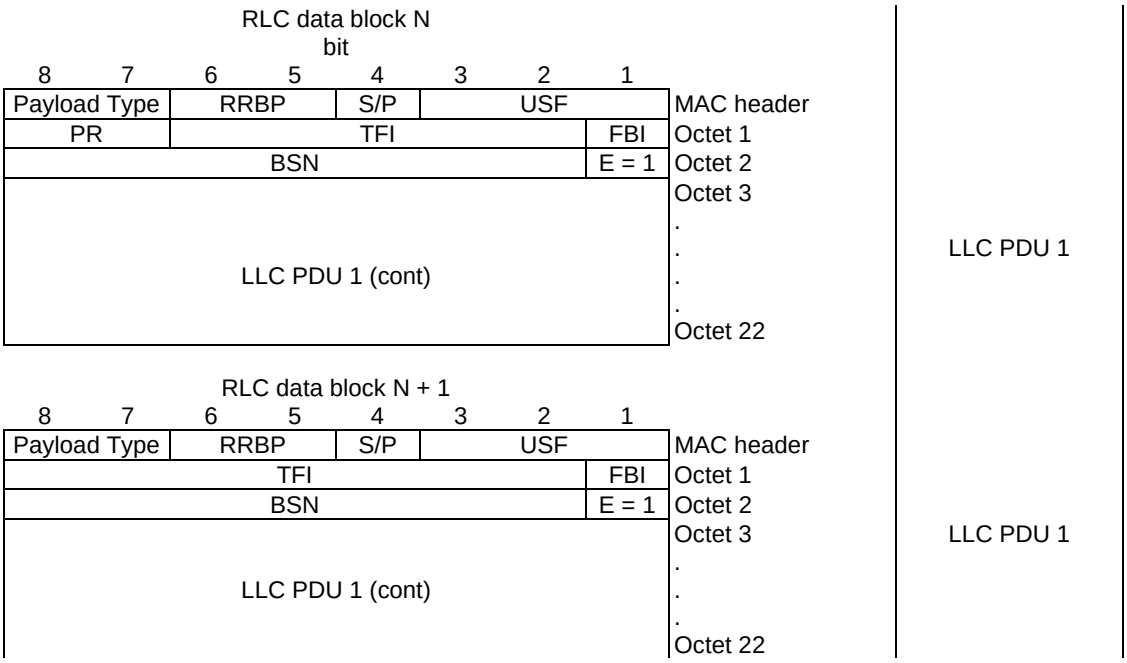

Figure B.4: Example when Length indicator (LI) can be omitted

B.5 Example 5

Figure B.5 provides an example when the final LLC PDU (FBI=1) of a *downlink* TBF fills the RLC data block precisely in which case the Length indicator can be omitted. In the example, LLC PDU 1 continues from a previous RLC data block and ends in and fills precisely the RLC data block shown.

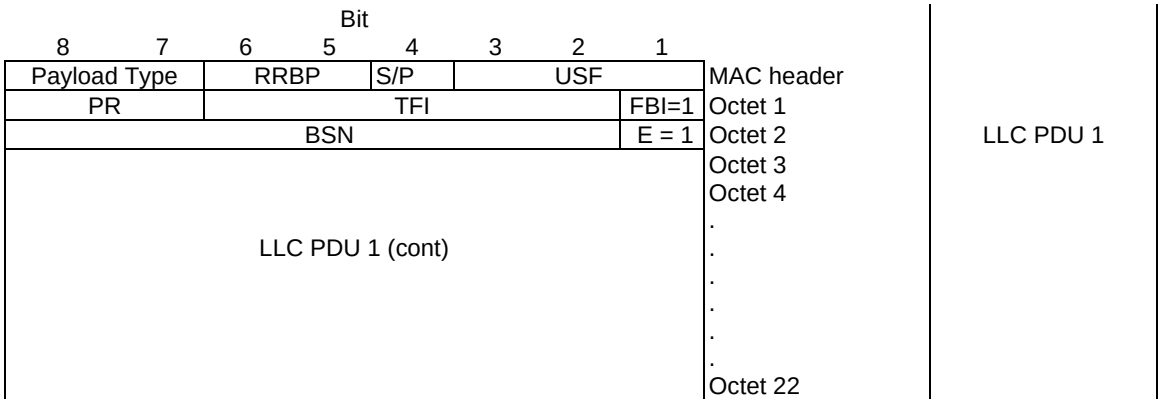

Figure B.5: Example when Length indicator (LI) can be omitted

B.6 Example 6

Figure B.6 provides an example when the final LLC PDU (CV=0) of an *uplink* TBF fills the RLC data block precisely in which case the Length indicator can be omitted. In the example, LLC PDU 1 continues from a previous RLC data block and ends in and fills precisely the RLC data block shown.

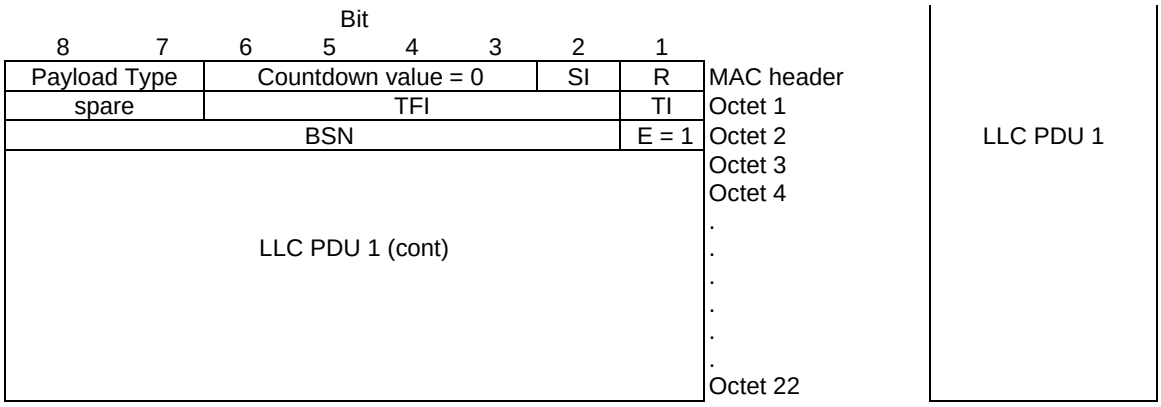

Figure B.6: Example when Length indicator (LI) can be omitted

B.7 Example 7

Figure B.7 provides an example when the Length indicator can be omitted. As the LLC PDU 1 begins in the RLC data block N and continues to the next one, no Length octet is needed.

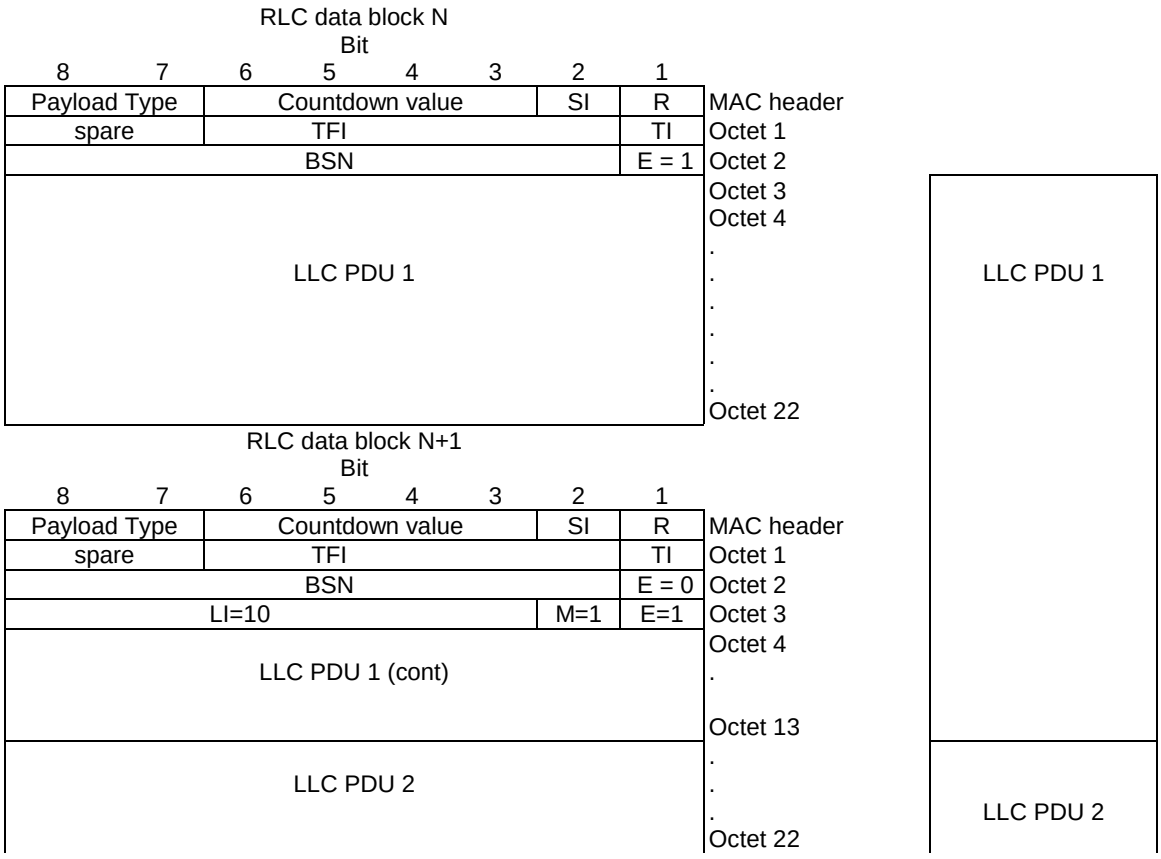

Figure B.7: Example when Length indicator (LI) can be omitted

Annex C (informative): Message Sequence Diagrams

The following figures illustrate message sequences for:

- one phase mobile originated access (figure C.1); and
- network originated access (figure C.2).

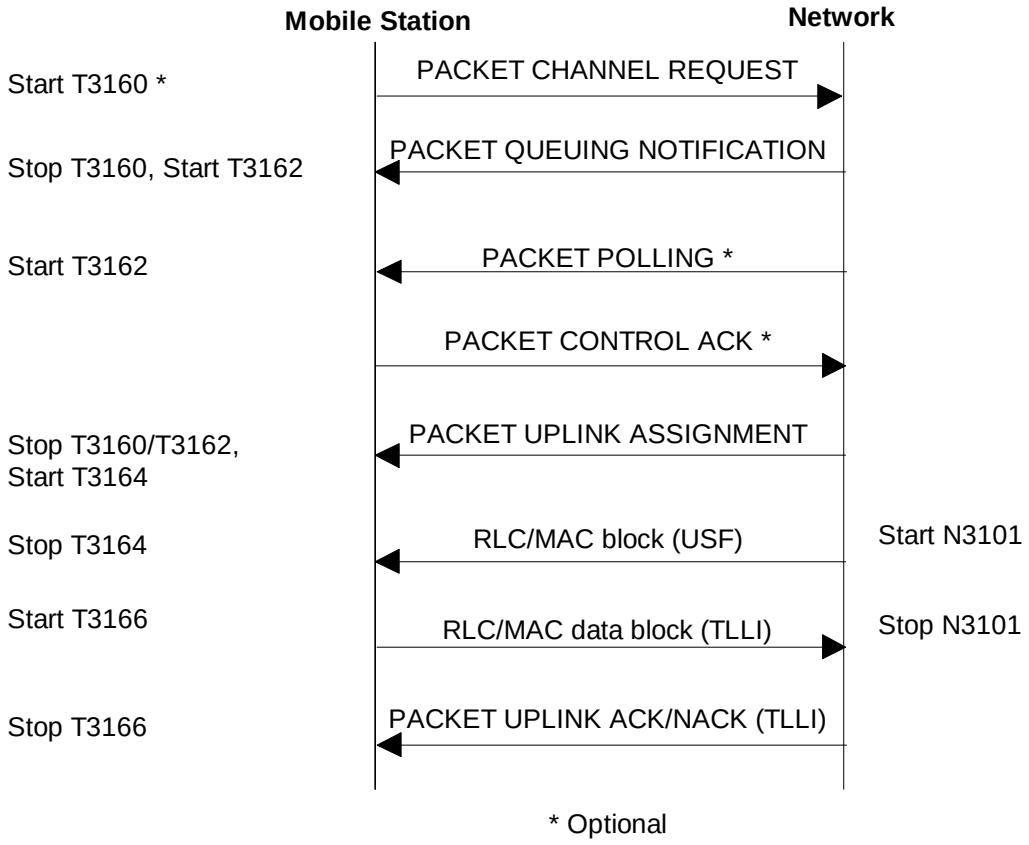

Figure C.1: Message Sequence Diagram for one phase packet access

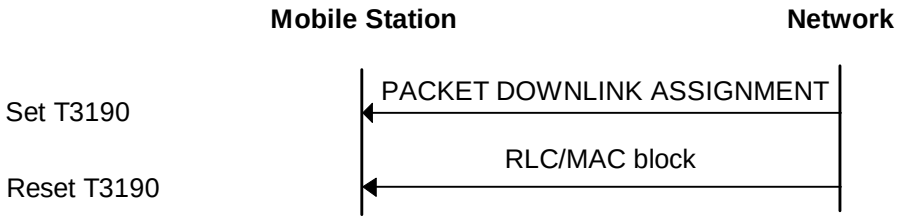

Figure C.2: TBF establishment initiated by the network

Annex D (informative): Examples of Fixed Allocation Timeslot Assignment

This annex presents several examples of the timeslot assignments possible when using the fixed allocation medium access mechanism. The timing of mobile station neighbour cell power measurements and mobile station requirements for monitoring for downlink PACCH are pointed out.

Figure D.1 shows a multislot class 4 mobile station assigned a 3 timeslot downlink TBF and no uplink TBF. Note that in all TDMA frames the Tra parameter is met and thus the mobile station is able to make a neighbour cell power measurement in every TDMA frame. In the first RLC/MAC block of the example, the mobile station is polled on timeslot 1 with RRBP = 0. In the fourth RLC/MAC block the mobile station responds to the poll by transmitting on timeslot 1.

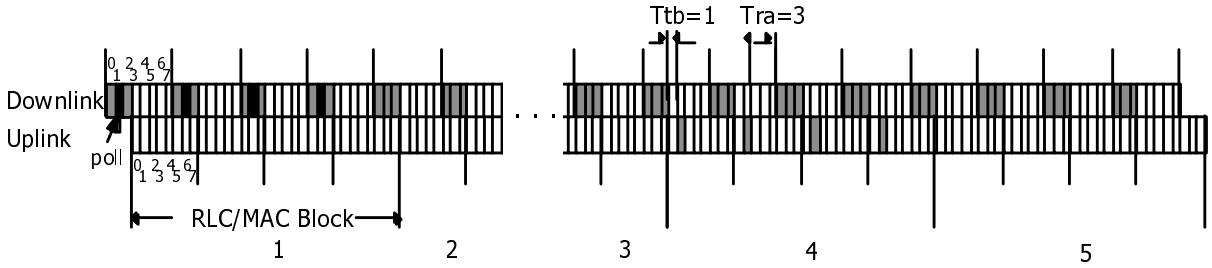

Figure D.1: Multislot Class 4 (Rx=3, Tx=1,Sum=4), 3 timeslot downlink TBF, with a poll on timeslot 1 (the natural timeslot)

Figure D.2 shows a multislot class 4 mobile station assigned a 3 timeslot downlink TBF and no uplink TBF. Note that in all TDMA frames the Tra parameter is met and thus the mobile station is able to make a neighbour cell power measurement in every TDMA frame. In the first RLC/MAC block of the example, the mobile station is polled on timeslot 2 with RRBP = 0. In the fourth RLC/MAC block the mobile station does not respond to the poll because a multislot class 1-12 mobile station can only be polled on a natural timeslot. The only natural timeslot for a multislot class 4 mobile station with the timeslot allocation in this example is 1.

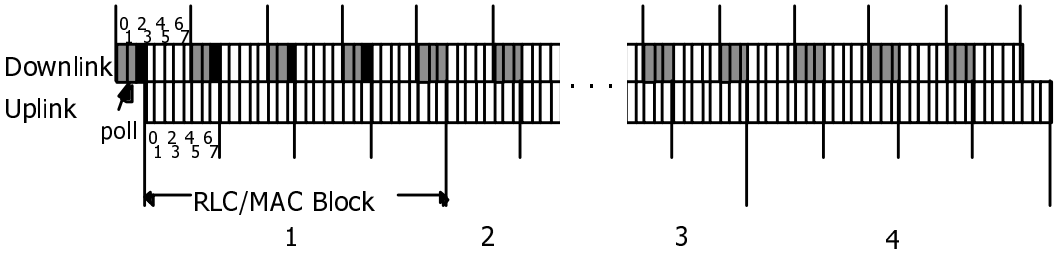

Figure D.2: Multislot Class 4 (Rx=3, Tx=1,Sum=4), 3 timeslot downlink TBF, with a poll on timeslot 2

Figure D.3 shows a multislot class 3 mobile station assigned a 2 timeslot uplink TBF and no downlink TBF. Note that in all TDMA frames the Tra parameter is met and thus the mobile station is able to perform a neighbour cell power measurement in every TDMA frame. Note that the Ttb and Tra parameters of multislot class 3 require that DOWNLINK CONTROL TIMESLOT = 0 for this timeslot allocation.

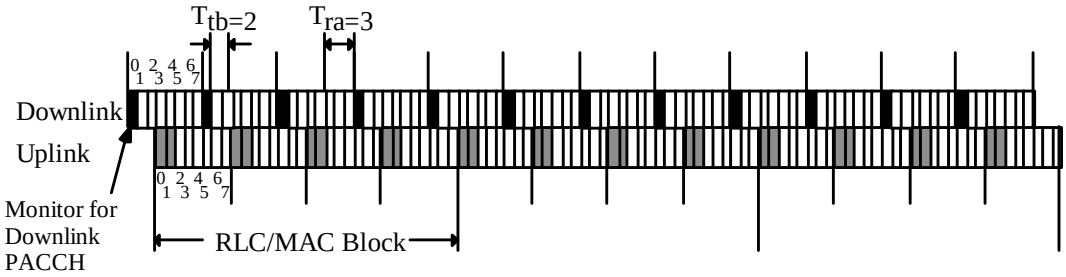

Figure D.3: Multislot Class 3 (Rx=2, Tx=2,Sum=3), 2 timeslot uplink TBF

Figure D.4 shows a multislot class 3 mobile station assigned a 2 timeslot uplink TBF with DOWNLINK CONTROL TIMESLOT = 0 and no downlink TBF. Note that in all TDMA frames the Tra parameter is met and thus the mobile station is required to make a neighbour cell power measurement in every TDMA frame. In the second RLC/MAC block of the example, the fixed allocation bitmap does not allocate timeslot 0 to the mobile.

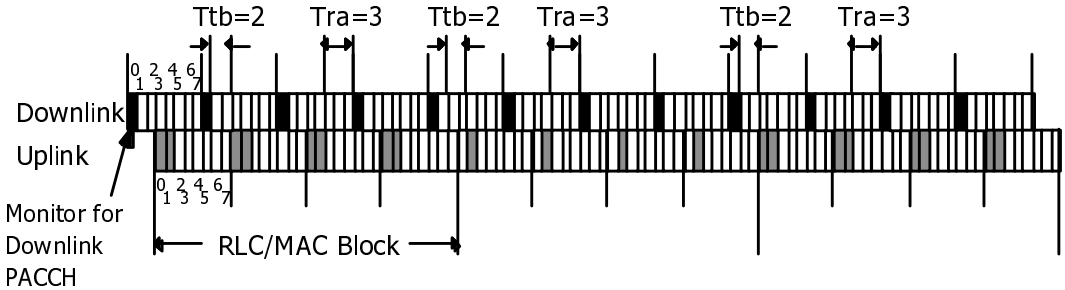

Figure D.4: Multislot Class 3 (Rx=2, Tx=2,Sum=3), 2 timeslot uplink TBF,
the first uplink timeslot in the second block is not allocated in the Allocation Bitmap

Figure D.5 shows a multislot class 13 mobile station, capable of transmitting and receiving simultaneously, assigned a 3 timeslot downlink TBF and a 3 timeslot uplink TBF. with DOWNLINK CONTROL TIMESLOT = 4. Note that in all TDMA frames the Tra parameter is met and thus the mobile station is required to make a neighbour cell power measurement in every TDMA frame. Note also that the Ttb and Tra parameters of multislot class 13 allow non-adjacent timeslots to be used in either the uplink or the downlink.Note also that for multislot class 13 with this timeslot allocation on uplink and downlink, timeslot 4 is the only allowed timeslot for the DOWNLINK CONTROL TIMESLOT.

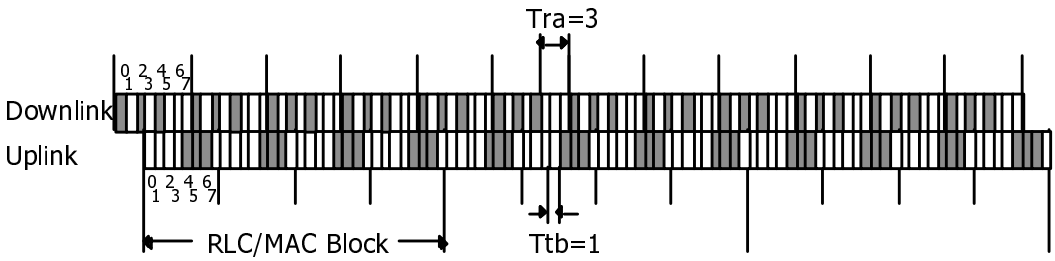

Figure D.5: Multislot Class 13 (Rx=3, Tx=3,Sum=NA), 3 timeslot downlink TBF, 3 timeslot uplink TBF

Figure D.6 shows a multislot class 13 mobile station assigned a 3 timeslot downlink TBF with DOWNLINK CONTROL TIMESLOT = 4 and a 2 timeslot uplink TBF. Note that in all TDMA frames the Tra parameter is met and thus the mobile station is able to make a neighbour cell power measurement in every TDMA frame. In the first RLC/MAC block of the example, the mobile station is polled on timeslot 2 with RRBP = 0. In the fourth RLC/MAC block the mobile station responds to the poll by transmitting on timeslot 2.

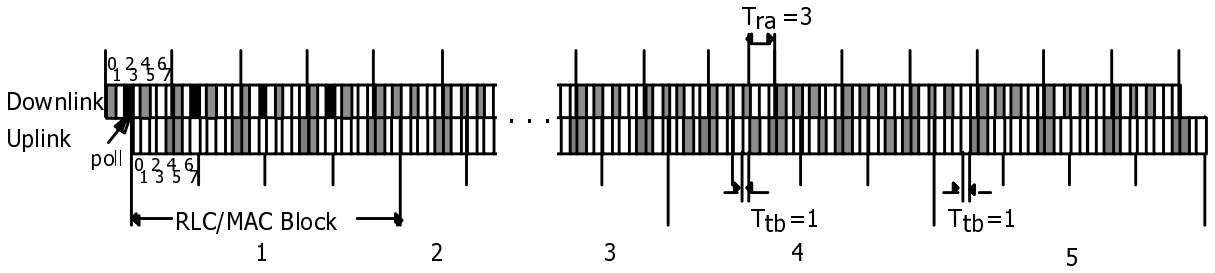

Figure D.6: Multislot Class 13 (Rx=3, Tx=3,Sum=NA), 3 timeslot downlink TBF, 3 timeslot uplink TBF, poll on timeslot 2

Figure D.7 shows a multislot class 21 mobile station operating in half duplex mode. The mobile station is assigned a 6 timeslot downlink TBF and no uplink TBF. In this example the PACKET DOWNLINK ASSIGNMENT message does not assign Measurement Mapping parameters to the mobile station, therefore the mobile station is required to make a neighbour cell power measurement in 24 of every 26 TDMA frames. Note that in all TDMA frames the Tra parameter is met and thus the mobile station is able to make a neighbour cell power measurement in every TDMA frame. In the first RLC/MAC block of the example, the mobile station is polled on timeslot 2 with RRBP = 0. In the fourth RLC/MAC block the mobile station responds to the poll by transmitting on timeslot 2. This transmission on timeslot 2 does not obey the Ttb and Tra parameters of multislot class 21, therefore both the mobile station and the network must omit downlink timeslots 4 and 5 in RLC/MAC block 3.

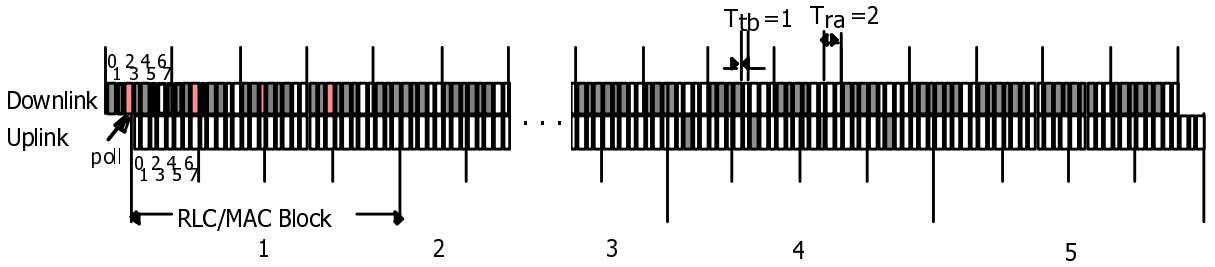

Figure D.7: Multislot Class 21 (Rx=6, Tx=4,Sum=NA), 6 timeslot downlink TBF, no measurement blocks assigned, poll on timeslot 2

Figure D.8 shows a multislot class 21 mobile station operating in half duplex mode. The mobile station is assigned a 6 timeslot downlink TBF and no uplink TBF. In this example the PACKET DOWNLINK ASSIGNMENT message does not assign Measurement Mapping parameters to the mobile station, therefore the mobile station is required to make a neighbour cell power measurement in 24 of every 26 TDMA frames. Note that in all TDMA frames the Tra parameter is met and thus the mobile station is able to make a neighbour cell power measurement in every TDMA frame. In the first RLC/MAC block of the example, the mobile station is polled on timeslot 0 with RRBP = 0. In the fourth RLC/MAC block the mobile station responds to the poll by transmitting on timeslot 0. This transmission on timeslot 0 does not obey the Ttb and Tra parameters of multislot class 21, therefore both the mobile station and the network must omit downlink timeslots 2, 3, 4 and 5 in RLC/MAC block 3.

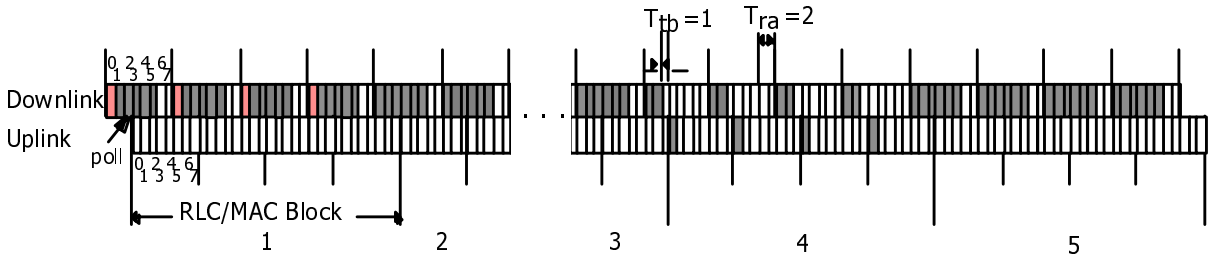

Figure D.8: Multislot Class 21 (Rx=6, Tx=4,Sum=NA), 6 timeslot downlink TBF, no measurement blocks assigned, poll on timeslot 0

Figure D.9 shows a multislot class 21 mobile station assigned a 4 timeslot uplink TBF with DOWNLINK CONTROL TIMESLOT = 1 and no downlink TBF. This example is valid for both half duplex mode and non-half duplex mode operation. Note that in all TDMA frames the Tra parameter is met and thus the mobile station is required to make a neighbour cell power measurement in every TDMA frame. Note also that the timeslot configuration and the Ttb and Tra parameters of multislot class 21 require that DOWNLINK CONTROL TIMESLOT = 1.

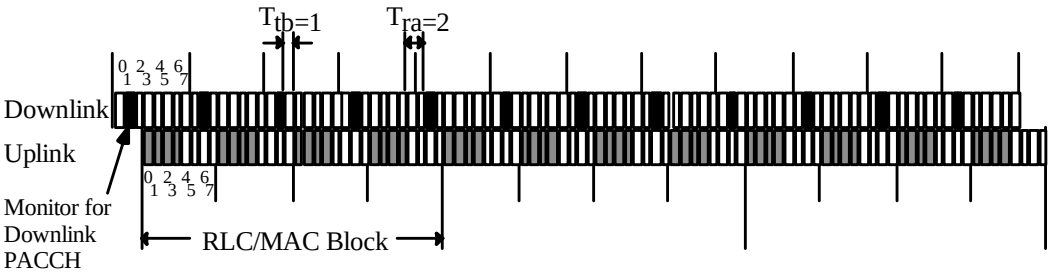

Figure D.9: Multislot Class 21 (Rx=6, Tx=4,Sum=NA), 4 timeslot uplink TBF

Figure D.10 shows a multislot class 21 mobile station operating in half duplex mode. The mobile station is assigned a 4 timeslot uplink TBF and no downlink TBF. In the second RLC/MAC block of the example, the mobile station transitions to an assignment consisting of a 6 timeslot downlink TBF and no uplink TBF. Note that the transition occurs when the mobile station has exhausted its current fixed allocation.

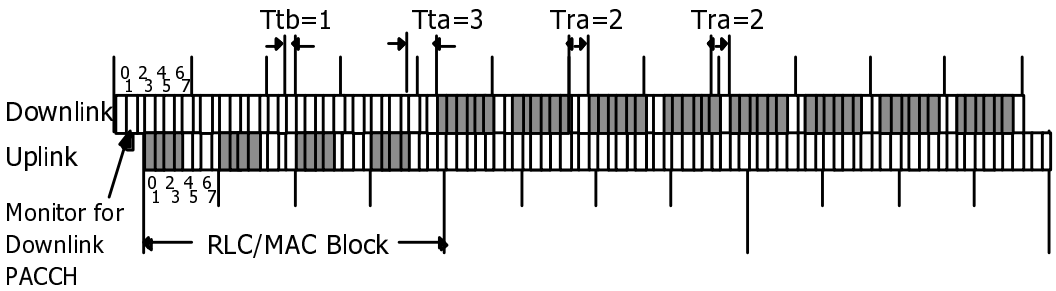

Figure D.10: Multislot Class 21 (Rx=6, Tx=4,Sum=NA), 4 timeslot uplink TBF, with a transition to a 6 timeslot downlink timeslot

Figure D.11 shows a multislot class 21 mobile station operating in half duplex mode. The mobile station is assigned a 6 timeslot downlink TBF and no uplink TBF. The mobile station has been assigned a Measurement Mapping block consisting of timeslots 3 and 4. Note that the Tra parameter does not apply because the Measurement Capabilities takes precedence when the mobile station has been assigned Measurement Mapping parameters. Trb is used instead. In the second RLC/MAC block, the mobile station performs the measurements defined by the Measurement Mapping parameters. Note that although a 3 timeslot gap is created, the mobile station is only required to measurements in timeslots 3 and 4. The mobile station may optionally perform measurements in timeslot 2.

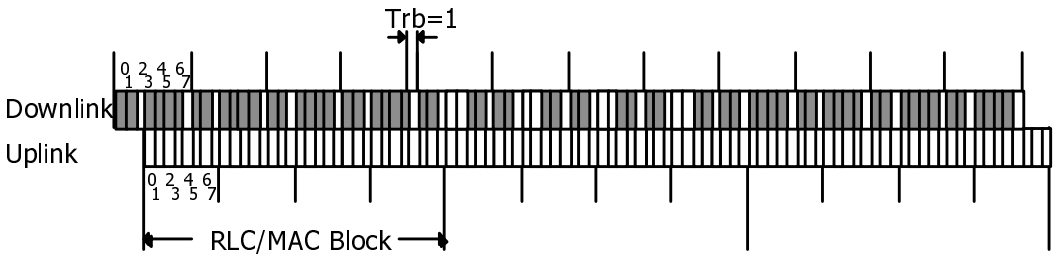

Figure D.11: Multislot Class 21 (Rx=6, Tx=4,Sum=NA), 6 timeslot downlink TBF, no uplink TBF, with a 2 timeslot Measurement Mapping block

Annex E (informative): Repeated Fixed Allocations

The following figures illustrate some of the procedures for repeated fixed allocations.

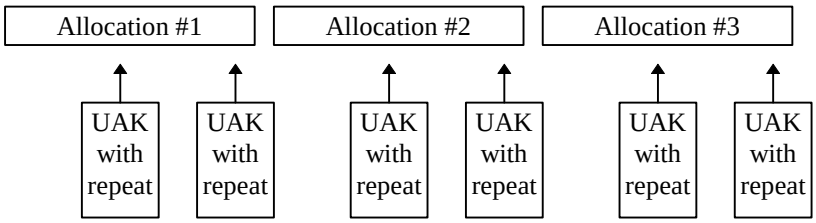

Figure E.1: Repeated Fixed Allocation

Figure E.1 shows the normal procedures for repeated allocation. During allocation #1, the mobile has decoded two uplink ack/nack messages each indicating that the bitmap should repeat. At the end of allocation #1, the mobile station shall automatically repeat the bitmap and start allocation #2.

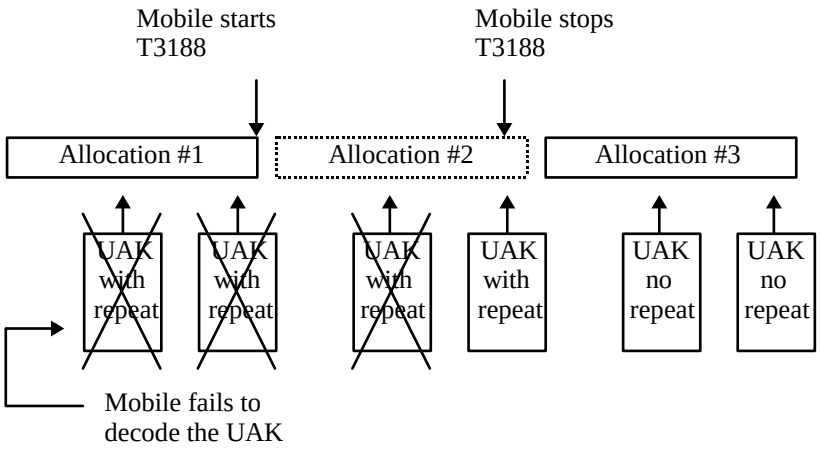

Figure E.2: Repeated Fixed Allocation with Missed ACK

Figure E.2 illustrates the mobile station's behaviour when it fails to decode any uplink ack/nack messages indicating that it should repeat. When allocation #1 ends, the mobile will stop transmitting at the end of its allocation. It will start timer T3188 and wait to receive either an assignment or an uplink ack/nack. When it receives an uplink ack/nack with repeat, it shall wait for the next allocation boundary to begin transmitting. In this example, the uplink ack/nack that it receives in allocation #2 also indicates that it should repeat. Therefore, the mobile station shall repeat a third allocation.

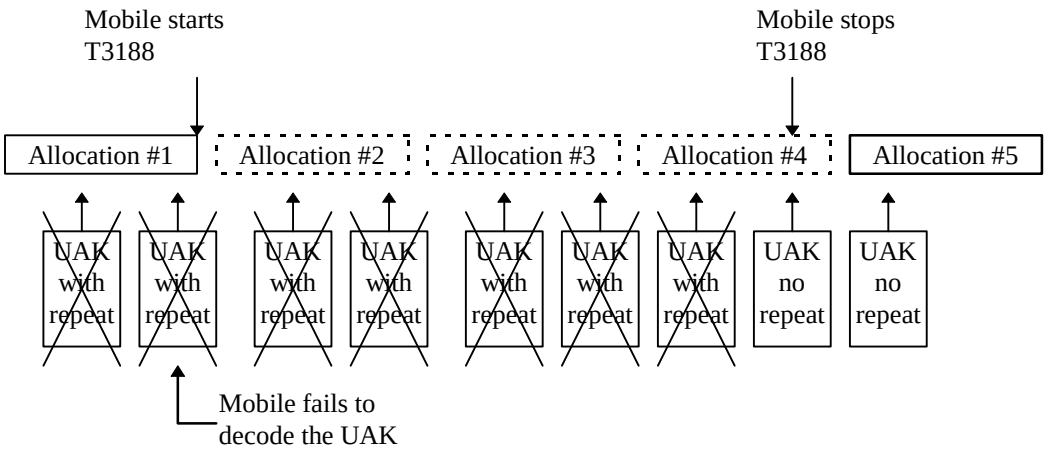

Figure E.3: Multiple Missed Uplink Ack/Nacks

In Figure E.3 the mobile station has missed many allocation periods. The mobile station keeps track of where each allocation would have started and when it receives and uplink ack/nack, it shall continue transmitting using the repeated allocation at the next natural allocation boundary.

Annex F (informative): Examples of Countdown procedure operation

This annex presents several examples of the countdown procedure operation.

The following parameters are used in the following examples:

TBC = total number of RLC data blocks that will be transmitted in the TBF,

BSN' = absolute block sequence number of the RLC data block, with range from 0 to (TBC - 1),

NTS = number of timeslots assigned to the uplink TBF in the assignment message, with range 1 to 8,

F.1 Example 1

In this example, shown in the first column, the total number of RLC data blocks in the TBF (TBC) is 155, the number of timeslots (NTS) is 1, and BS_CV_MAX is 15. The second column shows the same example with BS_CV_MAX = 6.

TBC	155
NTS	1
BS_CV_MAX	15

BSN'	CV
137	15
138	15
139	15
140	15
141	14
142	13
143	12
144	11
145	10
146	9
147	8
148	7
149	6
150	5
151	4
152	3
153	2
154	0

TBC	155
NTS	1
BS_CV_MAX	6

BSN'	CV
137	15
138	15
139	15
140	15
141	15
142	15
143	15
144	15
145	15
146	15
147	15
148	15
149	6
150	5
151	4
152	3
153	2
154	0

Figure F.1: Example 1

F.2 Example 2

In this example, shown in the first column, the total number of RLC data blocks in the TBF (TBC) is 155, the number of timeslots (NTS) is 3, and BS_CV_MAX is 6. Note that the RLC data block with BSN' = 154 arbitrarily occurs in timeslot 2. In the second column, the same example is shown with the RLC data block with BSN' = 154 occuring in timeslot 0.

TBC	155
NTS	3
BS_CV_MAX	6

TS0		TS1		TS2	
BSN'	CV	BSN'	CV	BSN'	CV
125	15	126	15	127	15
128	15	129	15	130	15
131	15	132	15	133	15
134	15	135	15	136	6
137	6	138	6	139	5
140	5	141	5	142	4
143	4	144	4	145	3
146	3	147	3	148	2
149	2	150	2	151	1
152	1	153	1	154	0

TS0		TS1		TS2	
BSN'	CV	BSN'	CV	BSN'	CV
127	15	128	15	129	15
130	15	131	15	132	15
133	15	134	15	135	15
136	6	137	6	138	6
139	5	140	5	141	5
142	4	143	4	144	4
145	3	146	3	147	3
148	2	149	2	150	2
151	1	152	1	153	1
154	0				

Figure F.2: Example 2

F.3 Example 3

In this example, the channel coding scheme is changed at BSN' = 149, resulting in more RLC data blocks being required to complete the TBF. The value of TBC is changed from 155 to 165 at BSN' = 149.

TBC 155
NTS 3
BS_CV_MAX 6

TS0		TS1		TS2	
BSN'	CV	BSN'	CV	BSN'	CV
125	15	126	15	127	15
128	15	129	15	130	15
131	15	132	15	133	15
134	15	135	15	136	6
137	6	138	6	139	5
140	5	141	5	142	4
143	4	144	4	145	3
146	3	147	3	148	2
149	5	150	5	151	5
152	4	153	4	154	4
155	3	156	3	157	3
158	2	159	2	160	2
161	1	162	1	163	1
164	0				

Figure F.3: Example 3

Annex G (informative): Handling of erroneous protocol data, examples

Procedures for the handling of erroneous protocol data are defined in clause 11.1. These procedures define error labels for the treatment of syntactical errors in a received message.

G.1 Application of error labels

An RLC/MAC control message description could have an error label included, as shown in the examples below.

```
< Packet XXX message content > ::=
    < FIELD_1 : bit (3) >
    < FIELD_2 : bit (16) >
    ...
    < padding bits >
     !   < Ignore : bit (*) = < no string > > ;
```

In the case of a complete message, the contents of the received syntactically incorrect message can be ignored.

Or

```
    < PRECEDING_FIELD : bit (3) >
    ...
    { 00     < FIELD_1 : bit (10) >
    | 01     < FIELD_2 : bit (10) >
     !   < Ignore : bit (2+10) = < no string > > }
    ...
    < FOLLOWING_FIELD : bit (8) >
```

The syntactically incorrect description within the { } brackets can be ignored, the correctly received descriptions preceding and following the { } brackets shall be accepted.

Or

```
< Structure 1 struct > ::=
    < FIELD_1: bit (3) >
    { 1 < FIELD_2 : bit (8) > } ** 0
    ...
     !   < Ignore : bit (*) = < no string > > ;
```

The above description indicates that the syntactically incorrect structure can be ignored. (Note: When this structure is included in the description of a message, any description following the structure must allow truncation).

G.2 Application of the 'Message escape' error label

The 'Message escape' branch protects the comprehension of the description following bit '0', as shown in the example below.

```
< Packet YYY message content > ::=    -- Protocol version 1
    < FIELD_1 : bit (3) >
    { 0 < FIELD_2 : bit (16) >
        ...
        < padding bits >
     ! < Message escape : 1 bit (*) = <no string> > } ;
```

The comprehension of 'FIELD_2' is required. If the receiver detects bit '1', the 'Message escape' branch is called and the remaining part of the message can be ignored.

The 'Message escape' branch may be used to introduce an new alternative coding of the message in a later version of the protocol.

```
< Packet YYY message content > ::=   -- Protocol version 2
    < FIELD_1 : bit (3) >
    { 0 < FIELD_2 : bit (16) >
        ...
        < padding bits >
    | 1          -- New code option, replacing old 'Message escape':
        { 00 < FIELD_3 : bit (12) >
            ...
            < padding bits >
         ! < Message escape : { 01 | 10 | 11 } bit (*) = <no string> > } } ;
```

An alternative coding, including 'FIELD_3', is introduced following 'bit 1' in the former 'Message escape' branch. A new 'Message escape' is defined, this time using to control bits to allow future modification.

A receiver implemented according to the original syntax will not accept the new coding. The original 'Message escape' branch will be called and the remaining part of the message, including 'FIELD_3' is ignored. The content of 'FIELD_1' (e.g. information to identify the receiver) is accepted and can be used to determine appropriate condition handling.

G.3 Application of truncated concatenation including 'padding bits'

The truncated concatenation may include 'padding bits' at the end of a message. In that case, the resulting concatenation shall fit exactly with the received message length, otherwise the message is syntactically incorrect.

The construction is useful, e.g., when a message ends with a sequence of optional components, where the transmitter may need to truncate tailing bits '0', indicating optional components not included in the message.

```
< Packet ZZZ message content > ::=
    ...
    {   { 0 | 1  < Optional component 1 > }
        { 0 | 1  < Optional component 2 > }
        ...
        { 0 | 1  < Optional component N > }
        < padding bits > } // ;
```

If the optional components from k to N are not needed in the message, the transmitter may use the full message length for the components up to optional component k – 1. The receiver accepts this message and assumes that the choice bits for optional components from k to N are all set to zero (i.e., these components are not present).

However, if the receiver detects a syntactical error within one optional component which is indicated as present in the message, that results in a truncated concatenation which does not fit with the received message length. In this case, the receiver shall not accept the message as being syntactically correct.

An error label may be provided within a truncated concatenation to allow the receiver to accept part of a concatenation in case of a syntactical error within it. This is useful for recurring components at the end of a message.

```
< Packet TTT message content > ::=
    ...
    {   { 1 { < Recurring component > ! < Ignore : bit (*) = < no string > > } } ** 0
        < padding bits > } // ;
```

If one of the recurring components is syntactically incorrect, the error branch is called. The error branch expands to the end of the message. The tail bit '0', terminating the recursion, and the 'padding bits' are truncated. The receiver accepts any syntactically correct instance of the recurring component preceding the syntactically incorrect one in the message.

G.4 Message extension using 'padding bits'

The bit '0' in the first bit position of the 'padding bits', see clause 11, may be altered into a bit '1' in future versions of the present document, in order to indicate an extension of the message content. When a message is received with bit '1' in this position, a receiver implemented according to the current version of the present document shall ignore the remaining part of the message.

The example show how a message can be extended, relying on the fact that the 'padding bits' are defined with bit '0' in the first bit position.

```
< Packet UUU message content > ::=   -- Current version of the present document
    < contents defined in current version >
    < padding bits > ;
```

The presence of the extension of the message content is indicated by bit '1'. The transmitter shall send a bit '1' in this position if any content is defined for the remaining part of the message. If a bit '0' is received in this position by a receiver in the new version, it shall ignore the remaining part of the message.

```
< Packet UUU message content > ::=                -- Future version of the present document
    < contents defined in current version >
    { null | 0    bit** = < no string >           -- Receiver backward compatible with earlier version
    | 1                                           -- Bit '1' sent by transmitter in new version
        < contents defined in a future version >
        < padding bits > } ;                      -- New 'padding bits' allows further extension
```

Annex H (informative): Document change History

Document history		
Date	**Status**	**Comments**
17 March 1998	6.0.0	Approved at SMG#25 (not for Publication)
16 July 1998	6.1.0	Incorporated CRs approved by SMG#26: A001r1, A002r2, A003, A004r2, A005, A006r2, A007, A009, A0010, A011r2. A012, A014, A015r1, A016r1, A017r1, A018, A019r1, A020r1, A021r2, A022r1, A024r3, A026r1, A027r2, A028, A029r2

Incorporated CRs approved by SMG#27 for version 6.1.0 → 6.2.0		
CR number	revision	Title
A031	1	Clarification of terminology for release of TBF
A032		Clarification of terminology for LLC PDU (frames)
A033		Radio Priority
A034	2	Updates to 3.1 Vocabulary
A035	1	Correction of various minor errors in clause 5
A036	2	Clarification of the relation between Medium Access mode and MS Multislot class
A037	1	Identifying a TBF
A038	2	Editorial corrections
A039		Packet Polling Request corrections
A040	1	Setting of Retry (R) bit
A041		Improvement of timer handling
A042		Corrections of name of PACKET POWER CONTROL/TIMING ADVANCE
A043		Use of logical channel in response to PACKET CHANNEL REQUEST
A044		Editorial corrections
A045		Fixed length TBF
A047	1	Network prioritisation and transmission of Packet Dummy Control Blocks
A048	1	Packet Timeslot Reconfigure
A049	1	Improvement of the DRX mode procedure
A050	1	Operation of downlink TBFs
A051	2	Corrections and improvements to clause 9
A052	1	Development of the segmentation description
A053	2	Corrections and improvements to clause 10
A054	1	Description of M and E bits
A055	1	Clarification of text in message
A056		Alignment of message type to logical channel
A058		Correction of reference for coding of parameter GPRS_MS_TXPWR_MAX_CCH
A059		Introduction of RLC data unit
A060		NC and Extended Measurement reporting and Cell Change Order procedures
A063	1	Restructuring of Packet Uplink Assignment message and Packet Timeslot Reconfigure
A064	1	Procedures on expiry of timer T3164
A065		Fixed Allocation
A066	1	Packet Access Reject
A067		Uplink PDCH Allocation for Extended Dynamic Allocation
A068	2	GAMMA/I_LEVEL measurements and suspending the downlink TBF
A069	1	Procedures on expiry of timer T3168
A070	2	Concurrent TBF procedures for half duplex operation ***NOTE*** **This is the same as A113 which was the one implemented**
A071	1	Broadcast of Packet PDCH Release on PACCH

A072		Abnormal cases for Resource Reallocation for Uplink
A073	2	Removal of throughput class from decisions on resource reallocation
A074	1	Packet Access Reject
A075		Use of the USF_GRANULARITY parameter
A076		Dynamic allocation uplink RLC data block transfer
A077	2	TBF Starting Time
A078		Extended Dynamic Allocation Multislot Classes
A079		Ending a downlink TBF and activating an uplink TBF
A080		Handling of the countdown procedure at short access
A081	2	Restructure of release procedures
A082	1	Packet Resource Request
A083		LLC frame type in Channel Request Description
A084		Field mapping in the Channel Request Description information element
A085	1	Throughput indication in Channel Request Description IE
A086	1	Mandatory DRX parameters
A087		Paging procedures
A088		Use of the packet paging channel and correction of the paging message
A089	4	Segmentation of RLC/MAC control messages
A090	2	Use of PAGE MODE parameter
A091	1	Structure of TBF establishment description
A092	2	Cell change procedure corrections
A093		Modifications to the access type values
A094		Persistence control procedure modifications
A096	1	Addition of Network Operation mode in PSI1
A097		Deletion of Mac Mode in PSI 1
A105	2	Corrections for the PACCH receiving during the fixed uplink assignment
A106	1	Correction of Polling for Packet Downlink Ack/Nack
A107	2	PR-field introduction to MAC header
A110		Corrections to MAC abnormal cases
A111	1	Corrections to downlink procedures
A112		Corrections to Fixed Allocation procedures
A114	1	Corrections to MAC procedures
A115		Resolution of text merge problems in 04.60 v6.1.0
A116		Corrections to PACKET TIMESLOT RECONFIGURE procedures
A117	1	Corrections to RLC procedures
A118	2	Undefined concurrent TBF conditions
A119	1	RLC/MAC timers
A120	1	Simplification of and corrections to Fixed Allocation reallocation
A121		MS mode of operation
A122		Clarification of PSI6
A123	1	Change of name of the RR_PRIORITY parameter tp CALL_PRIORITY
A125		Alignment of TFI description
A126		Neighbour cell power measurements
A128		Removal of duplicated IE in the Packet Release Request message
A129		Support of split pg cycle on PCCCH

CRs approved at SMG#28

SPEC	CR	REV	PHASE	VERS	SUBJECT	CAT	NEW_VERS
04.60	A098	3	R97	6.2.0	Possibility to define starting times as relative to the current frame number	B	6.3.0
04.60	A131		R97	6.2.0	Downlink TBF release & Packet Uplink Assignment	F	6.3.0
04.60	A133		R97	6.2.0	Timing advance for 2 phase access	F	6.3.0
04.60	A135	1	R97	6.2.0	Radio Priority used for signalling	F	6.3.0
04.60	A137		R97	6.2.0	Handling of PACKET PAGING REQUEST when T3172 is running	F	6.3.0
04.60	A138		R97	6.2.0	Clarification on the usage of timer T3198	F	6.3.0
04.60	A139		R97	6.2.0	Definition of USF=FREE	F	6.3.0

SPEC	CR	REV	PHASE	VERS	SUBJECT	CAT	NEW_VERS
04.60	A140		R97	6.2.0	Parameter C32_QUAL missing	F	6.3.0
04.60	A141		R97	6.2.0	Criterion on selecting a new cell with the "Abnormal release with cell reselection" procedure	F	6.3.0
04.60	A142	1	R97	6.2.0	NC Measurement reporting	F	6.3.0
04.60	A144		R97	6.2.0	Extended Dynamic Allocation (related to CR 0408A378)	F	6.3.0
04.60	A146	1	R97	6.2.0	Mobile identity coding in Packet Paging Request	F	6.3.0
04.60	A147		R97	6.2.0	Clarification on Extended Dynamic Allocation	F	6.3.0
04.60	A148	1	R97	6.2.0	Unsolicited uplink resource reallocation by network in fixed allocation mode	D	6.3.0
04.60	A149		R97	6.2.0	Clarification on MAC modes for downlink transfer	D	6.3.0
04.60	A150		R97	6.2.0	Correction of text referring to Allocation Reference	F	6.3.0
04.60	A152		R97	6.2.0	EXT Measurement reporting	F	6.3.0
04.60	A154	1	R97	6.2.0	Timing of MS polling response	F	6.3.0
04.60	A155		R97	6.2.0	CR 04.60 A155 Correction of downlink TFI	F	6.3.0
04.60	A156		R97	6.2.0	CR 04.60 A156 Correction to Global TFI definition	F	6.3.0
04.60	A157	2	R97	6.2.0	Corrections to frequency parameter and mobile allocation encoding and procedures	F	6.3.0
04.60	A159		R97	6.2.0	Timing advance abnormal release	F	6.3.0
04.60	A160		R97	6.2.0	Corrections to RLC variables	F	6.3.0
04.60	A161	1	R97	6.2.0	Corrections to RLC/MAC messages	F	6.3.0
04.60	A163		R97	6.2.0	Corrections to annex D	F	6.3.0
04.60	A170	1	R97	6.2.0	A170 Claification of the downlink TBF	F	6.3.0
04.60	A171		R97	6.2.0	Correction on timing of MS polling response	F	6.3.0
04.60	A172		R97	6.2.0	HCS parameters in the PSI3 message	F	6.3.0
04.60	A174		R97	6.2.0	Contention resolution at two phase access	F	6.3.0
04.60	A175		R97	6.2.0	Removal of TBF suspension	F	6.3.0
04.60	A176	1	R97	6.2.0	MS behaviour on receipt of a valid RRBP	F	6.3.0
04.60	A177		R97	6.2.0	Packet Uplink Assignment message description	F	6.3.0
04.60	A178	1	R97	6.2.0	CSN.1 coding of Packet Uplink Ack/Nack	F	6.3.0
04.60	A181		R97	6.2.0	Coding of the multislot class	F	6.3.0
04.60	A182		R97	6.2.0	Coding of the uplink TFI	F	6.3.0
04.60	A184		R97	6.2.0	Uplink & downlink assignment reaction times	F	6.3.0
04.60	A185		R97	6.2.0	MS reaction time to change in channel coding scheme	F	6.3.0
04.60	A186		R97	6.2.0	Correction to I_LEVEL reporting	F	6.3.0
04.60	A188		R97	6.2.0	Clarification of paging response on CCCH	D	6.3.0
04.60	A189	1	R97	6.2.0	Clarification of RLC_OCTET_COUNT value for open and close-ended TBFs	F	6.3.0
04.60	A194		R97	6.2.0	Change of cause name "invalid priority"	F	6.3.0
04.60	A200		R97	6.2.0	Correction of range of Length Indicator	F	6.3.0
04.60	A201		R97	6.2.0	Removal of UPLINK_RLC_MODE from PACKET TIMESLOT RECONFIGURE	F	6.3.0
04.60	A202	2	R97	6.2.0	Call reestablishment procedure for abnormal release with cell reselection in ready state	F	6.3.0
04.60	A204	2	R97	6.2.0	Establishment of downlink TBF	F	6.3.0
04.60	A205	1	R97	6.2.0	Extended dynamic allocation neighbour cell power measurements	F	6.3.0
04.60	A206	1	R97	6.2.0	Reallocation in fixed MAC-mode	F	6.3.0
04.60	A207	1	R97	6.2.0	Validity of MA and frequency parameters	F	6.3.0
04.60	A208	1	R97	6.2.0	Corrections on contention resolution and Ack/Nack description	F	6.3.0
04.60	A210		R97	6.2.0	Clarification of T3188 and T3190 use	F	6.3.0
04.60	A213	2	R97	6.2.0	GPRS Cell Reselection	F	6.3.0
04.60	A214	1	R97	6.2.0	Additional corrections relative to CR 04.60 A157	F	6.3.0
04.60	A215	1	R97	6.2.0	GPRS Measurement reporting	F	6.3.0
04.60	A216		R97	6.2.0	51-multiframe PBCCH	F	6.3.0
04.60	A217		R97	6.2.0	Corrections of typographical error	F	6.3.0
04.60	A219		R97	6.2.0	Clarification of timeslot reconfigure message	F	6.3.0

SPEC	CR	REV	PHASE	VERS	SUBJECT	CAT	NEW_VERS
04.60	A220	1	R97	6.2.0	PSI 3bis contents	F	6.3.0
04.60	A221	1	R97	6.2.0	Correction to Countdown Value procedure	F	6.3.0
04.60	A222		R97	6.2.0	Clarification about countdown procedure when nw initiates release of uplink TBF	F	6.3.0
04.60	A223		R97	6.2.0	Corrections to Ack/Nack description IE	F	6.3.0
04.60	A224		R97	6.2.0	Clarification on countdown procedure	F	6.3.0
04.60	A225		R97	6.2.0	Correction of timing advance procedure	F	6.3.0

CRs approved at SMG#29

SPEC	CR	REV	PHASE	VERS	SUBJECT	CAT	NEW_VERS
04.60	A151	4	R97	6.3.0	Handling of erroneous data in RLC/MAC control messages	F	6.4.0
04.60	A183	4	R97	6.3.0	Error handling	F	6.4.0
04.60	A223	4	R97	6.3.0	TBF failure actions within an RR-network commanded cell change order procedure	F	6.4.0
04.60	A225		R97	6.3.0	Correction to 1 phase access contention resolution	F	6.4.0
04.60	A227	1	R97	6.3.0	Correction to Packet Uplink Ack/nack message description	D	6.4.0
04.60	A228	1	R97	6.3.0	Packet TBF Release for DL TBF	F	6.4.0
04.60	A230		R97	6.3.0	Removal of REL_OR_ABS_FN for TBF Starting Time	F	6.4.0
04.60	A231	2	R97	6.3.0	Clarification on Packet Control Acknowledgement on 4 access bursts	F	6.4.0
04.60	A232	1	R97	6.3.0	Downlink PACCH Timeslot after sending Packet PDCH Release.	F	6.4.0
04.60	A235	1	R97	6.3.0	Clarification of DL TBF acknowledgement	F	6.4.0
04.60	A236	2	R97	6.3.0	PACKET CONTROL ACKNOWLEDGEMENT message	F	6.4.0
04.60	A238		R97	6.3.0	PACKET UPLINK DUMMY CONTROL BLOCK message on PCCCH	F	6.4.0
04.60	A239		R97	6.3.0	PSI3/PSI3bis: Element length of PSI3_BIS_INDEX and PSI3_BIS_COUNT	F	6.4.0
04.60	A240		R97	6.3.0	MA_CHANGE_MARK in PACKET RESOURCE REQUEST message	F	6.4.0
04.60	A241		R97	6.3.0	N_AVG_I parameter	F	6.4.0
04.60	A242		R97	6.3.0	PAN_DEC/INC/MAX parameters	F	6.4.0
04.60	A243	2	R97	6.3.0	RLC data block encoding	F	6.4.0
04.60	A244		R97	6.3.0	Timing advance abnormal release	F	6.4.0
04.60	A245		R97	6.3.0	Subclause 12.7	F	6.4.0
04.60	A246	1	R97	6.3.0	The requirement on MS to listen to both PBCCH and PAGCH during the random access phase should be relaxed	F	6.4.0
04.60	A247		R97	6.3.0	PSI scheduling information to be added toPSI1	F	6.4.0
04.60	A248	1	R97	6.3.0	Encoding of Mobile Identity in PACKET PAGING REQUEST message	F	6.4.0
04.60	A250		R97	6.3.0	USF response delay	F	6.4.0
04.60	A251	1	R97	6.3.0	Improved Cell reselection by introduction of the PACKET PSI STATUS message	F	6.4.0
04.60	A252		R97	6.3.0	Clarification to the Final Block Indicator	F	6.4.0
04.60	A253	1	R97	6.3.0	Editorial corrections	F	6.4.0
04.60	A254		R97	6.3.0	Correction to assignment procedure	F	6.4.0
04.60	A255	1	R97	6.3.0	Clarification to polling response	F	6.4.0
04.60	A256		R97	6.3.0	Corrections to definition of V(R) in RLC-Unacknowledged mode	F	6.4.0
04.60	A257		R97	6.3.0	Removal of MS initiated Downlink TBF release procedure	F	6.4.0
04.60	A258	3	R97	6.3.0	Polling and Priorization mechanism	F	6.4.0
04.60	A259	1	R97	6.3.0	Alignment of 04.60 with GSM 05.02 concerning BS_PRACH_BLKS parameter	F	6.4.0
04.60	A260	2	R97	6.3.0	Addition of CS calls parameter in Non GPRS Cell Options IE	F	6.4.0
04.60	A261	1	R97	6.3.0	Handling of NON_DRX_TIMER during circuit switched	F	6.4.0
04.60	A264	1	R97	6.3.0	Clarification on paging procedures for a class B mobile station in packet transfer mode	F	6.4.0
04.60	A266		R97	6.3.0	BCCH-CHANGE-MARK and RACH Control Parameters	F	6.4.0

SPEC	CR	REV	PHASE	VERS	SUBJECT	CAT	NEW_VERS
04.60	A267	1	R98	6.3.0	Addition of CS calls parameter in Non GPRS Cell Options IE	F	6.4.0
04.60	A268		R97	6.3.0	T3166_T3168 in GPRS Cell Option Information element	F	6.4.0
04.60	A269	1	R97	6.3.0	NC and EXT Measurement reporting	F	6.4.0
04.60	A272		R97	6.3.0	Stopping of timer T3172	F	6.4.0
04.60	A273		R97	6.3.0	MAC mode in Channel Request Description	F	6.4.0
04.60	A274		R97	6.3.0	Corrections to EXT Measurement Parameters structure	F	6.4.0
04.60	A275		R97	6.3.0	Burst format for PTCCH/U	F	6.4.0
04.60	A277	2	R97	6.3.0	Establishment of new downlink TBF	F	6.4.0
04.60	A278	4	R97	6.3.0	Improving the detection of the 'end of UL TBF' when in unack mode	F	6.4.0
04.60	A281	2	R97	6.3.0	PSI3bis contents	F	6.4.0
04.60	A282		R97	6.3.0	CSN.1 correction in Packet access reject.	F	6.4.0
04.60	A284		R97	6.3.0	Correction regarding repeat_allocation during fixed allocation TBF	F	6.4.0
04.60	A285		R97	6.3.0	Correction to RTI field range	F	6.4.0
04.60	A289		R97	6.3.0	The Pb parameter is needed in SI13/PSI13	F	6.4.0
04.60	A291		R97	6.3.0	Correction to Temporary Flow Identity Direction	F	6.4.0
04.60	A292		R97	6.3.0	Removal of SI15	F	6.4.0
04.60	A294	1	R97	6.3.0	Clarification to the class B mode of operation	F	6.4.0
04.60	A295	2	R97	6.3.0	RLC correction	F	6.4.0
04.60	A296		R97	6.3.0	One phase access contention resolution	F	6.4.0
04.60	A297		R97	6.3.0	UL TFI on 5 bits	F	6.4.0
04.60	A299		R97	6.3.0	Cell selection parameters in Packet Measurement Order	C	6.4.0
04.60	A302	1	R97	6.3.0	Corrections to uplink resource reassignment procedure	F	6.4.0
04.60	A303	2	R97	6.3.0	Corrections to fixed allocation bitmap	F	6.4.0
04.60	A306	1	R97	6.3.0	Addition of NCC_PERMITTED field for extended measurement	F	6.4.0
04.60	A308		R97	6.3.0	PAN_MAX parameter	F	6.4.0
04.60	A309		R97	6.3.0	RXQUAL in PACKET RESOURCE REQUEST message	F	6.4.0
04.60	A310		R97	6.3.0	Clarification of polling response	F	6.4.0
04.60	A311		R97	6.3.0	Parameters in PACKET MEASUREMENT ORDER message	F	6.4.0
04.60	A313	1	R97	6.3.0	Addition of a new cause in abnormal cases	F	6.4.0
04.60	A314	1	R97	6.3.0	Clarification on MS behaviour after a receipt of an erroneous P Upl Ass mess. while T3172 is running	F	6.4.0
04.60	A316		R97	6.3.0	Suppression of CONTENTION_RESOLUTION_TLLI in fixed allocation struct	F	6.4.0
04.60	A317		R97	6.3.0	Correction to Abnormal cases	F	6.4.0
04.60	A319		R97	6.3.0	Correction to Packet Timeslot Reconfigure	F	6.4.0
04.60	A321		R97	6.3.0	Correction to the Wait Indication units in Packet Access Reject	F	6.4.0
04.60	A334		R97	6.3.0	Correction of Repeat Allocation	F	6.4.0
04.60	A336		R97	6.3.0	Correction to the reception of extended paging	F	6.4.0
04.60	A338	2	R97	6.3.0	Round trip delay independent of RRBP value	F	6.4.0
04.60	A339	2	R97	6.3.0	Clarification for starting time for PTCCH/U	F	6.4.0
04.60	A344		R97	6.3.0	Correction to uplink resource reallocation	F	6.4.0
04.60	A345		R97	6.3.0	Correction to state variable V(Q)	F	6.4.0
04.60	A346		R97	6.3.0	Correction to receive state variable	F	6.4.0
04.60	A348		R97	6.3.0	Correction to release of uplink TBF	F	6.3.0
04.60	A350		R97	6.3.0	EXT Frequency List struct in the PSI5	F	6.4.0
04.60	A352		R97	6.3.0	SoLSA exclusive access indication on PBCCH	B	6.4.0
04.60	A354	2	R97	6.3.0	Correction of BTS power output	F	6.4.0
04.60	A355		R97	6.3.0	Clarification on SI/PSI Re-acquisition	F	6.4.0
04.60	A357		R97	6.3.0	Clarification on Length Indicator field	D	6.4.0
04.60	A359		R97	6.3.0	Clarification on use of Short Access	F	6.4.0
04.60	A360		R97	6.3.0	TFI assignment in PACKET TIMESLOT RECONFIGURE	F	6.4.0
04.60	A361		R97	6.3.0	Final Block Indicator (FBI) in unacknowledged mode	F	6.4.0
04.60	A362	1	R97	6.3.0	Clarification on coding of GAMMA_TN parameter	F	6.4.0
04.60	A363	1	R97	6.3.0	Correction on T3194 reference	F	6.4.0

SPEC	CR	REV	PHASE	VERS	SUBJECT	CAT	NEW_VERS
04.60	A364		R97	6.3.0	Reaction time after contention resolution during one phase access	F	6.4.0
04.60	A365		R97	6.3.0	Handling of Downlink Ack/Nack messages containing Channel Request Description IE or Final Ack Indicator	F	6.4.0
04.60	A370	2	R97	6.3.0	RXQUAL field and SIGN_VAR field optional in some MAC messages	F	6.4.0
04.60	A372	1	R97	6.3.0	Alignment 04.60 on 04.08 about single block allocation for a two phase access establishment	F	6.4.0
04.60	A373		R97	6.3.0	Miscellaneous corrections	F	6.4.0
04.60	A374	1	R97	6.3.0	Management of T3190 and T3180 timers during a TBF release procedure	F	6.4.0
04.60	A375	1	R97	6.3.0	Addition of timer T3181, Wait for USF during PRACH access	F	6.4.0
04.60	A376		R97	6.3.0	Multislot configuration in fixed allocation	F	6.4.0
04.60	A380		R97	6.3.0	Correction to Annex E	F	6.4.0
04.60	A381		R97	6.3.0	MA_CHANGE_MARK in the PACKET RESOURCE REQUEST message	F	6.4.0
04.60	A382	1	R97	6.3.0	Answer to the PACKET POLLING REQUEST message	F	6.4.0
04.60	A383	1	R97	6.3.0	Correction to countdown procedure	F	6.4.0
04.60	A384	1	R97	6.3.0	RLC segmentation coding clarification	F	6.4.0
04.60	A385	1	R97	6.3.0	Smooth or immediate Packet TBF release in case of network controlled reselection	F	6.4.0
04.60	A386	1	R97	6.3.0	Missing causes in the Packet Cell Change failure	F	6.4.0
04.60	A387	1	R97	6.3.0	T3170 definition	D	6.4.0
04.60	A388	1	R97	6.3.0	Change cell failure and resumption of an uplink transfer	F	6.4.0
04.60	A389	3	R97	6.3.0	Packet Timing Advance assignment in PACKET TIMESLOT RECONFIGURE, Nokia	F	6.4.0
04.60	A390		R97	6.3.0	Non-DRX on CCCH and PCCCH	F	6.4.0
04.60	A393	1	R97	6.3.0	Maximum length of MS Radio Access Capability	F	6.4.0
04.60	A394	1	R97	6.3.0	New use of PR field	F	6.4.0
04.60	A396	2	R97	6.3.0	Definition of 'spare padding' bit sequence	F	6.4.0

CRs approved at SMG#30

CR	REV	PHASE	VERS	SUBJECT	CAT	NEW_VERS
A405		R97	6.4.0	Miscellaneous correction.	F	6.5.0
A406		R97	6.4.0	Clarification of use of PR field.	F	6.5.0
A407		R97	6.4.0	Correction to polling for downlink ack/nack.	F	6.5.0
A408		R97	6.4.0	MS handling of repeated RLC data blocks.	F	6.5.0
A409		R97	6.4.0	CV coding during retransmission of RLC data blocks.	F	6.5.0
A411		R97	6.4.0	Corrections to PSI status message.	F	6.5.0
A412		R97	6.4.0	Change order of PSI4_COUNT and PSI4_INDEX	F	6.5.0
A414		R97	6.4.0	Align EXC_ACC field in CELL CHANGE ORDER & MEASUREMENT ORDER with PSI3.	F	6.5.0
A418		R97	6.4.0	Handling of BS_CV_MAX value if set to zero	F	6.5.0
A421		R97	6.4.0	Handling of segmented control messages	F	6.5.0
A427		R97	6.4.0	Reaction time clarifications	F	6.5.0
A430	1	R97	6.4.0	Correction to power control signaling information	F	6.5.0
A434	2	R97	6.4.0	Correction to definition of power control parameters	F	6.5.0
A436	1	R97	6.4.0	Missing definition of NR_OF_FREQUENCIES	D	6.5.0
A438		R97	6.4.0	Correction of EXC_ACC parameter	F	6.5.0
A447		R97	6.4.0	Deletion of section 8.1.2.4a	F	6.5.0
A453	1	R97	6.4.0	Improvements to Clause 9	F	6.5.0
A456		R97	6.4.0	EXT Measurement reporting, Coding corrections	F	6.5.0
A459		R97	6.4.0	NC and EXT Measurement reporting- Clarifications	F	6.5.0
A462		R97	6.4.0	HCS Parameters	F	6.5.0
A465		R97	6.4.0	Number of PSI3bis messages	F	6.5.0
A468	1	R97	6.4.0	CELL_BAR_ACCESS_2 in PSI3bis	F	6.5.0
A471	1	R97	6.4.0	Multiband Reporting	F	6.5.0
A474	1	R97	6.4.0	Clarification of DRX	F	6.5.0
A477		R97	6.4.0	Correction to RRBP field	F	6.5.0
A480		R97	6.4.0	Editorial corrections	F	6.5.0
A486		R97	6.4.0	Removal of reference to MS initiated Downlink TBF release procedure	F	6.5.0
A489		R97	6.4.0	Correction to invalid frequency parameter behaviour by mobile	F	6.5.0
A492		R97	6.4.0	PCCCH Organization Parameters IE	D	6.5.0
A496	1	R97	6.4.0	Message coding corrections	F	6.5.0
A502		R97	6.4.0	Removal of unnecessary "Filler octets" in clause 9	F	6.5.0
A505	1	R97	6.4.0	Clarification of TFI usage	F	6.5.0
A514	2	R97	6.4.0	PSI3 and PSI 3bis coding	F	6.5.0
A517		R97	6.4.0	Editorial corrections to the cell reselection procedure	F	6.5.0
A520		R97	6.4.0	Correction to N3104_MAX	F	6.5.0
A523		R97	6.4.0	Impossibility for MS to check inequality 'x+12 < RTI < x+20 (modulo 32)' when DPC is on	F	6.5.0
A541	1	R97	6.4.0	Addition of PR field in RLC/MAC control block	F	6.5.0
A563	1	R97	6.4.0	Starting time alignment and gap between resource changes,	F	6.5.0
A568		R97	6.4.0	Alignment of uplink access procedure between 04.08 and 04.60	F	6.5.0
A579	1	R97	6.4.0	New coding of PR field	F	6.5.0
A582		R97	6.4.0	Defining the maximum number of carriers for the interference measurements	F	6.5.0
A587	1	R97	6.4.0	Clarification of race condition	A	6.5.0
A588		R97	6.4.0	Addition of PR mode in ASSIGNMENT message in 04.08	F	6.5.0

CRs approved at SMG#30bis

CR	R	PH	VERS	SUBJECT	CA	NEW_V
A597	1	R97	6.5.0	Maximum length for LLC PDU in RLC acknowledged mode.	F	6.6.0
A603	1	R97	6.5.0	Abnormal cases missing for downlink RLC data block transfer.	F	6.6.0
A606	1	R97	6.5.0	Clarification of T3182 restarting during re-transmission in	F	6.6.0
A609	1	R97	6.5.0	Align packet access procedure on PCCCH with CCCH.	F	6.6.0
A618	1	R97	6.5.0	Define default values for EXT_REPORTING_TYPE and	F	6.6.0
A621		R97	6.5.0	Remove duplicate definitiuons of ALPHA and other	D	6.6.0
A628	1	R97	6.5.0	Review of timers T3162, T3170 and T3186 used at TBF	F	6.6.0

CR	R	PH	VERS	SUBJECT	CA	NEW_V
A634	1	R97	6.5.0	Length of BA-GPRS list	F	6.6.0
A641		R97	6.5.0	Correction to Packet Assignment procedure	F	6.6.0
A644	1	R97	6.5.0	Correction to Packet Access Reject procedure	F	6.6.0
A647		R97	6.5.0	Clarification on cell reselection procedure	F	6.6.0
A664		R97	6.5.0	Abnormal cases for uplink resource reallocation (R97)	F	6.6.0
A679		R97	6.5.0	Handling of timers related to measurement reporting during	F	6.6.0
A682		R97	6.5.0	Precision on mobile behaviour at the time of TLLI change	F	6.6.0
A689		R97	6.5.0	Close-ended TBF in dynamic mode (R97)	F	6.6.0
A701		R97	6.5.0	precision on DOWNLINK_CONTROL_TIMESLOT	F	6.6.0
A707	1	R97	6.5.0	Correction timer T3192 values	F	6.6.0

CRs agreed at SMG#31:

CR	R	PH	VERS	SUBJECT	CA	NEW_VERS
A400	2	R97	6.6.0	Consistency of TFI definition	D	6.7.0
A415	3	R97	6.6.0	Downlink assignment initiation	F	6.7.0
A483	2	R97	6.6.0	Clarification to network initiated TBF release	F	6.7.0
A600	2	R97	6.6.0	Correction to MS behaviour upon cell change failure.	F	6.7.0
A612	1	R97	6.6.0	Correction to MS reaction upon assignment of invalid	D	6.7.0
A625	1	R97	6.6.0	Revision of Timer attributes	F	6.7.0
A631	1	R97	6.6.0	Interference measurments - Alignment 04.60 to 05.08	F	6.7.0
A637	2	R97	6.6.0	Editorial corrections	F	6.7.0
A661	2	R97	6.6.0	Handling of segmented control messages (R97)	F	6.7.0
A698	2	R97	6.6.0	Measurement Reporting when PBCCH is not allocated	F	6.7.0
A713	1	R97	6.6.0	Alignment of GSM 04.60 to 05.08 on interference	F	6.7.0
A716	2	R97	6.6.0	Alignment of GSM 04.60 to 05.08 on interference	F	6.7.0
A731	1	R97	6.6.0	Page Mode in every (unknown) downlink RLC/MAC	F	6.7.0
A746	1	R97	6.6.0	Channel Group structs in PSI4	F	6.7.0
A752	1	R97	6.6.0	Correction to RLC_OCTET_COUNT definition	F	6.7.0
A765	1	R97	6.6.0	Conflicting usage of function val().	F	6.7.0
A768		R97	6.6.0	MM non-DRX mode R97	F	6.7.0
A770		R97	6.6.0	CTRL_ACK parameter in the PACKET CONTROL	F	6.7.0
A773		R97	6.6.0	TIMESLOTS_AVAILABLE in Packet PDCH Release R97	F	6.7.0
A776		R97	6.6.0	Clarification on PACKET PSI STATUS message (R97)	F	6.7.0
A781		R97	6.6.0	Clarification on handling of unknown TFI in control message	F	6.7.0
A784		R97	6.6.0	Correction to polling mechanism during downlink	F	6.7.0
A789		R97	6.6.0	Clarification on handling of repeated reject structures	F	6.7.0

v 6.8.0: Includes purely editorial corrections in addition to implementation of CRs agreed at SMG#31bis. These are mainly correction of problems with the frames around CSN.1 code. CR history that was forgotten in version 6.7.0 has been added.CRs approved at SMG#31bis.

CR	R	PH	VERS	SUBJECT	CA	NEW_V
A803		R97	6.7.0	Correction to mapping of interference levels	F	6.8.0
A824		R97	6.7.0	Clarification of reason for CHANNEL REQUEST	F	6.8.0
A829	1	R97	6.7.0	Addition of NC0 parameter for Packet Measurement Order message	F	6.8.0
A838		R97	6.7.0	Correction to timer T3174 value	F	6.8.0
			6.8.0	Update to Version 6.8.1 for Publication		6.8.1

History

Document history				
V6.1.0	August 1998	Public Enquiry	PE 9851:	1998-08-21 to 1998-12-18
V6.3.0	April 1999	Vote	V 9924:	1999-04-13 to 1999-06-11
V6.3.1	June 1999	Publication		
V6.4.0	July 1999	One-step approval procedure	OAP 9952:	1999-07-28 to 1999-11-26
V6.4.1	December 1999	Publication		
V6.6.0	February 2000	One-step Approval Procedure	OAP 200022:	2000-02-02 to 2000-06-02
V6.7.0	April 2000	One-step Approval Procedure	OAP 20000825:	2000-04-26 to 2000-08-25
V6.8.0	May 2000	One-step Approval Procedure	OAP 20000929:	2000-05-31 to 2000-09-29
V6.6.1	June 2000	Publication		
V6.7.1	September 2000	Publication		
V6.8.1	October 2000	Publication		